CITY OF BALTIMORE

DEPARTMENT OF TRANSPORTATION

FEDERAL AID PROJECT NO. STP-3057(4)N
MDSHA CONTRACT NO. BC320-001-815
CITY OF BALTIMORE CONTRACT NO. TR08310

REHABILITATION OF CENTRAL AVENUE AND STORM DRAIN

EASTERN AVENUE TO MADISON STREET

MANDATORY ATTENDANCE AT THE PRE-BID MEETING

F.A.P. NO. STP-3057(4)N
SHA CONTRACT NO. BC320-001-815
BALTIMORE CITY CONTRACT NO. TR08310

NOTICE TO BIDDERS

SUPPLEMENTAL BIDDING INSTRUCTION

The following instruction supplements the bidding information found elsewhere in the Bid Book and those referenced therein.

EACH BIDDER IS HEREBY NOTIFIED THAT HE/SHE/IT MUST COMPLETELY FILL IN THE ORIGINAL BID AND ALL REQUIRED AFFIDAVITS AND DOCUMENTS LOCATED IN THE BID BOOK. THE ORIGINAL BID (WHICH MUST REMAIN ATTACHED TO THE BID BOOK) PLUS THE FULLY COMPLETED DUPLICATE BID MUST BE SUBMITTED IN THE BID ENVELOPE, IF ONE IS PROVIDED FOR THAT PURPOSE.

FAILURE TO FOLLOW THESE SIMPLE DIRECTIONS WILL CAUSE YOUR BID TO BE DECALRED UNRESPONSIVE AND THE BID WILL BE REJECTED BY THE BOARD OF ESTIMATES.

MANDATORY ATTENDANCE AT PRE-BID MEETING

ATTENDANCE AT THE PRE-BID MEETING IS **MANDATORY**. YOUR FAILURE TO ATTEND THIS MEETING WILL DEEM YOUR BID **UNACCEPTABLE**. A SIGN IN SHEET WILL BE PROVIDED AT THE PRE-BID MEETING.

* CONTRACTORS BIDDING THE PROJECT ARE REQUIRED TO SUBMIT THEIR FULLY EXECUTED SUBCONTRACT AGREEMENTS, DBE FORM D, SUBCONTRACTOR COST BREAKDOWN, OUTREACH FORM C WITH SUPPORTING DOCUMENTATION, WORK CAPACITY FOR BOTH PRIME AND SUBCONTRACTORS, AN EXPERIENCE AND EQUIPMENT FORM FOR PRIME, AND A LIST OF ALL NON-MINORITY COMPANIES WHO ARE EXPECTED TO WORK ON THE CONTRACT INCLUDING SUPPLIERS. **BOTH THE PRIME AND ITS SUBCONTRACTORS SHOULD BE IN GOOD STANDING WITH THE MARYLAND DEPARTMENT OF ASSESSMENTS AND TAXATION.**

* THE CONTRACTOR IS REQUIRED TO SUBMIT THE CONTENTS OF THE WHITE ENVELOPE **AT THE BID OPENING IN TRIPLICATE (originals and signed in blue ink)**. THIS INFORMATION IS TO BE SEALED AND SUBMITTED IN THE ENVELOPE MARKED **"CONFIDENTIAL AND PROPRIETARY"**.

NOTICE TO CONTRACTORS

FHWA Form-47

The Federal Highway Administration has published a final rule that eliminates the requirement that contractors performing work on NHS projects valued at more than One Million dollars submit the form FHWA-47 Bid Price Data. Currently, the Administration includes a federal specification FHWA-1273 in all of our federally funded projects that contains this requirement. Therefore, based on the final rule Contractors are no longer required to submit the FHWA-47 form in accordance with the current language of the FHWA-1273 specification.

Environmental Stewardship

The Maryland State Highway Administration is committed to the development and maintenance of the Administration's highway system in an environmentally responsible manner. Therefore, Contractors are encouraged to consider the use of Administration-approved recycled and reclaimed materials in construction projects where practicable, and in accordance with the Plans and Specifications.

The Contractor is also encouraged to reuse, salvage, or recycle all generated waste materials to the extent possible. Materials that are easily recognizable, maintain their physical properties, meet the required material properties for recycling, are easily separated and transported, and have value as commodities are candidates for recycling. These types of materials generally include metals (steel, iron, copper, aluminum, bronze, etc.), plastics (cones, barrels, barricades, crash cushion plastic barrels, conduit, containers, etc.), aluminum poles and signs, electronic and electrical components, signals and signal components, topsoil, formwork, temporary falsework, brick, masonry, stone, wood, paper, and timber and yard waste from clearing and grubbing operations.

F.A.P. NO. STP-3057(4)N
SHA CONTRACT NO. BC320-001-815
BALTIMORE CITY CONTRACT NO. TR08310

RESOLUTION
OF
THE BOARD OF ESTIMATES
OF
THE CITY OF BALTIMORE

WHEREAS, the Mayor and City Council of Baltimore, acting by and through the Board of Estimates pursuant to Article VI, Section 4 of the Charter of Baltimore City, 1964 Revision, as amended, is responsible for awarding contracts and supervising all purchasing by the City; and

WHEREAS, the Board of Estimates wishes to insure that all City contractors, subcontractors, and their agents and employees conduct themselves in accordance with established federal, state, and local laws.

NOW, THEREFORE, BE IT RESOLVED BY THE BOARD OF ESTIMATES OF BALTIMORE CITY, that the following policy, which has always been applicable to City contracts, be formally adopted by this Board to apply to all City contractors, subcontractors and their agents and employees:

1. Contractors, subcontractors, and their agents and employees may not engage in unfair labor practices as defined under The National Labor Relations Act and applicable federal regulations and state laws.

2. Contractors, subcontractors, and their agents may not threaten, harass, intimidate or in any way impede persons employed by them who on their own time exercise their rights to associate, speak, organize, or petition governmental officials with their grievances.

3. If the Board of Estimates determines that a contractor, subcontractor, or their agents have violated the policy set forth in this Resolution said contractor, or subcontractor, will

be disqualified from bidding on City contracts, and if they are currently completing contracts, they will be found in default of their contracts.

4. A copy of this Resolution must be included in all City contracts.

5. This Resolution applies to all City contracts entered into after the date of its adoption and to each and every City contract, or subcontract in effect on the date of its adoption, and each department and agency of the City is charged with the responsibility of so notifying all present contractors, and subcontractors.

6. This Resolution takes effect immediately.

APPROVED BY THE BOARD OF ESTIMATES

(Signed)
Shirley A. Williams June 29,1994

Clerk Date

Approved As To Form And
Legal Sufficiency This
28th Day of June, 1994

(Signed)Leslie S. Winner
Leslie S. Winner
Principal Counsel

F.A.P. NO. STP-3057(4)N
SHA CONTRACT NO. BC320-001-815
BALTIMORE CITY CONTRACT NO. TR08310

NOTICE
PRE-BID MEETING

A Mandatory "Pre-Bidding Informational Meeting" will be held on **August 2, 2011** at 9:00 a.m., in the Director's Conference Room on 4th Floor, 7 East Redwood Street, Baltimore, MD 21202 for Contract No. **F.A.P. NO. STP3057(4)E, S.H.A. NO. BC320-001-815, BALTIMORE CITY NO. TR-08310; REHABILITATION OF CENTRAL AVENUE AND STORM DRAIN, FROM EASTERN AVENUE TO MADISON STREET.**

Representatives of appropriate governmental agencies, as well as affected public and private utilities, will be present for the purpose of answering or obtaining answers to questions of interested parties. Information pertaining to right-of-way, utilities, and design and construction details will be discussed.

Attendees who leave their name and address will be furnished a copy of the Minutes of the meeting, which will include a list of all persons present and their affiliation. It is possible that these Minutes will contain some clarification or discussion. Anyone who does not attend the meeting will be able to review a copy at 7 East Redwood Street, Baltimore, MD 21202.

If other information relative to this project is desired, please contact:

Scott Weaver– 410-396-6935

Fax No. 410-547-8276

E-mail: scott.weaver@baltimorecity.gov

MANDATORY ATTENDANCE AT THE PRE-BID MEETING

INVITATION FOR BIDS
Table of Contents

	NO. OF PAGES	PAGE NO.
Cover	1	
Notice to Bidders	1	I
Notice to Contractors	1	II
Resolution of the Board of Estimates of the City of Baltimore	2	III
Pre-Bid Meeting	1	V
Table of Contents	7	VI
Notice of Letting	2	1
CONTRACT PROVISIONS		
Contractor Registration Requirements	1	3
Notice To All Holders Of This Contract Document Manual on Uniform Traffic Control Devices (MUTCD) Requirements	1	4
Notice To All Holders Of This Contract Document National Cooperative Highway Research Program (NCHRP) Report 350 Implementation Schedule for Devices Used In the Maintenance of Traffic	2	5
Occupying Wetlands	1	7
FHWA 1273	10	8
Affirmative Action Requirements Utilization of Disadvantaged Business Enterprises for Federal Aid Contracts	10	18
MBE/DBE Compliance Field Meeting	1	28
Traffic Control Work Plan Certification	1	29
Prevailing Wage Instructions for the Contractor	4	30
Schedules for Minimum Hourly Wages	1	34
Classification No. 2	4	35
General Decision Number MD20080011	3	39

INVITATION FOR BIDS
Table of Contents

	NO. OF PAGES	PAGE NO.
Notice of Actions Required for Affirmative Action to Ensure Equal Equal Employment Opportunity (Executive Order 11246)	8	42
Training Provisions	4	50
High Visibility Safety Apparel Policy	2	54
SPECIAL PROVISIONS		
Project Description	1	56
Notice to Contractor	16	57
GENERAL PROVISIONS		
Index	3	73
General Provisions	62	76
TERMS AND CONDITIONS		
SP-TC Section 4-Control of Work TC-4.02 Failure to Adequately Maintain Project	1	138
SP-TC Section 5-Legal Relations and Progress TC-5.01 Insurance	3	139
SP-TC Section 6-Restrictions and Permits TC-6.10 Recycled or Rehandled Material	1	142
SP-TC Section 6-Restrictions and Permits TC-6.14 Restricting for Placing and Usng Equipment on Structures, or Storing Materials on/against Structures	1	143
CATEGORY 100 PRELIMINARY		
SP-Pre and Post Construction Survey	2	144
SP – Temporary Traffic Signals	1	146
SP – Clearing and Grubbing	1	147
SP – Section 103– Engineers Office	4	148
SP- Section 104-Maintenance of Traffic		
104.01 Traffic Control Plan	4	152
104.07 Arrow Panel (AP)	2	156
104.11 Temporary Pavement Marking	2	158

INVITATION FOR BIDS
Table of Contents

	NO. OF PAGES	PAGE NO.
104.12 Drums for Maintenance of Traffic	1	160
104.14 Cone for Maintenance of Traffic	1	161
104.20 Temporary Orange Construction Fence	1	162
104.21 Cellular Telephones	1	163
104.31 Accessible Pedestrian MOT	2	164
SP- Section 113--Digital Camera	2	166
SP- Section 114--Truck Staging Areas and Idling Requirements	2	168
CATEGORY 200 GRADING		
SP-Section 203-Borrow Excavation	3	170
SP-Contingent Special Excavation- Railway Area	2	173
SP-Variable Depth Graded Aggregate Base for Backfill	1	175
SP-Contaminated and Hazardous Materials	11	176
CATEGORY 300 DRAINAGE		
SP-Section 305-Miscellaneous Structures	1	187
SP-Section 308-Temporary 3-Inch Asphalt Berm	1	188
SP-Section 314-Flowable Backfill	1	189
SP- Cured in Place Pipe (CIPP) Lining	14	190
SP- 3-Inch PVC Pipe for Drain Outfall	2	204
SP- Slotted Drain CMP	2	206
SP- Wattle Inlet Protection	3	208
CATEGORY 400 STRUCTURES		
SP- Maintenance of Stream Flow	2	211
SP-Site Removal	1	213
SP-Storm Drain Repairs	5	214
SP-Reinforced Machine Spiral Wound PVC Liner Pipe	9	219
SP-12-Inch Reinforced Concrete Block Wall with Grout Fill	4	228
CATEGORY 500 PAVING		

INVITATION FOR BIDS
Table of Contents

	NO. OF PAGES	PAGE NO.
SP- Construction Fabric	1	232
SP- Furnish Frame and Cover (Various Sizes)	1	233
SP-Section 504-Hot Mix Asphalt Pavement	5	234
SP-Sawcutting and Sealing of Hot Mix Asphalt Pavement	3	239
SP-Section 520-Plain and Reinforced Portland Cement Concrete Pavement	2	242
SP-Section 553-Lead Free Reflective Thermoplastic Pavement Marking	3	244
SP-Section 556-Preformed Thermoplastic Pavement Marking	2	247
CATEGORY 600 SHOULDERS		
SP-Detectable Warning Surface	4	249
SP-Double Swing Gate	1	253
SP-Section 602-Curb, Combination Curb and Gutter, and Monolithic Median	1	254
SP-Section 603-Sidewalks	1	255
SP-Benches	2	256
SP-Litter Receptacles	2	258
SP-Newspaper Corral	2	260
SP-Bike Racks	2	262
SP-Clay Brick Unit Pavers	4	264
SP-Belgian Block Paving	5	268
CATEGORY 700 LANDSCAPING		
SP-Root Control System	3	273
SP-Section 710-Tree, Shrub, and Perennial Installation and Establishment	1	276
CATEGORY 800 TRAFFIC		
SP- Section 801-EZ Park Machine Base	2	277

INVITATION FOR BIDS
Table of Contents

	NO. OF PAGES	PAGE NO.
SP- Section 805-Electrical Conduit and Fittings	8	279
SP-Section 805-Electrical Manholes	4	287
SP-Concrete Foundation for Baltimore City Traffic, Light, and Pedestrian Structures	3	291
SP-Steel Sub-Base for Homeland Pole	1	294
SP-Controller and Cabinet Foundation Base	1	295
SP-Concrete Encased DB-120 Lighting Conduit	3	296
SP-Concrete Encased PVC Schedule 40 Traffic Conduit	3	299
SP-HPS Cobra Head Lighting Fixture, Lamp And Bracket Arm	3	302
SP-Decorative Homeland Pedestrian Lighting Pole, 150-Watt HPS Victorian Fixture, Lamp and Photocell	2	305
SP-30 Foot Round Aluminum Lighting Pole	2	307
SP-Electrical Cable, Wire, and Connectors	2	309
SP- Section 811-Traffic Hand Box with DTT Cover and Lighting Hand Box with DPW Cover	3	311
SP-Standard Precast Collector Hand Box	2	314
SP-Ground Mounted Sign Support	1	316
SP-Band Sign to Support	1	317
SP-Section 813- Signs	1	318
SP-Section 814-Signal Heads	22	319
SP-Section 816-Controller and Cabinets	2	341
SP-Video Detection Equipment	17	343
SP-Section 818-Signal Structures	4	360
SP-Battery Backup System for Traffic Signals	14	364
SP-Audible/Tactile Pedestrian Pushbutton Station, Signs and Cabinet Base Unit	2	378

INVITATION FOR BIDS
Table of Contents

	NO. OF PAGES	PAGE NO.
SP-Removal, Salvage, Disposal, Pick-up and Delivery of Traffic Signal and Lighting Equipment	2	380
SP-Catalog Cuts and Working Drawings	5	382
SP-Utility Connections and Utility Stakeout	1	387
SP-Temporary Street Lighting	1	388
SP-Disconnect, Pull Back, and Re-Route Existing Cable	1	389
SP-Water and Sanitary Sewer	16	390
SP-Contingent Electrical Manhole Top Slab Reconstruction	2	406
CATEGORY 900 MATERIALS		
SP-Section 900.03-Recycled Materials	4	408
SP-Section 902-Portland Cement Concrete and Related Products	16	412
SP-Section 904-Performance Graded Asphalt Binders and Hot Mix Asphalt	2	428
SP-Section 908-Reinforcement Steel	1	430
SP-Section 916-Soil and Soil Aggregate Borrow	1	431
SP-Section 925-Detectable Warning Surfaces	2	432
SP-Section 951.01- Nontoxic Lead Free Waterborne Pavement Markings	5	434
SP-Section 951.02- Lead Free Thermoplastic Pavement Markings	4	439
SP-Section 951.04- Removable Pavement Marking Tape	3	443
SP-Section 951.06-Heat Applied Permanent Preformed Thermoplastic Reflective Pavement Marking Material	2	446
DETAIL PLATES	93	448
BORING LOGS	77	541
TEST HOLE RESULTS	125	618

INVITATION FOR BIDS
Table of Contents

	NO. OF PAGES	PAGE NO.
PROPOSAL FORM PACKET		
Extra Work Certification	1	743
Bid or Proposal	1	744
EMarylandMarketPlace	1	745
Schedule of Prices	42	746
Bidder Certification of Work Capacity	1	788
Federal Proposal Form Packet	28	789
Bid Bond	2	817
Agreement	2	819
Performance Bond	3	821
Payment Bond	3	824

F.A.P. NO. STP-3057(4)N
SHA CONTRACT NO. BC320-001-815
BALTIMORE CITY CONTRACT NO. TR08310

CITY OF BALTIMORE
DEPARTMENT OF TRANSPORTATION
NOTICE OF LETTING

Sealed Bids or Proposals, in duplicate addressed to the Board of Estimates of the Mayor and City Council of Baltimore and marked for **F.A.P. NO. STP-3057(4)N, S.H.A. NO. BC320-001-815, BALTIMORE CITY NO. TR08310; REHABILITATION OF CENTRAL AVENUE AND STORM DRAIN, FROM EASTERN AVENUE TO MADISON STREET** will be received at the office of the Comptroller, Room 204 City Hall, Baltimore, Maryland until 11:00 A.M. **September 14 , 2011.**

Board of Estimates employees will be stationed at the Security Unit Counter just inside the Holliday Street entrance to City Hall from 10:45 A.M. every Wednesday to receive bids from Bidders who feel they would not be able to deliver the bid envelope to Room 204 by 11:00 A.M. due to a possible delay by the security check and scanner process. The bids will be processed with a hand scanner, placed in a box and promptly at 11:00 A.M., the box will be sealed and brought to Room 204 City Hall, Comptroller's Office. Positively no bids will be received after 11:00 A.M. and at 12:00 Noon on said date they will be publicly opened by the Board of Estimates in Room 215 in said City Hall.

Baltimore City hereby notifies all Bidders that it will affirmatively insure that in any Contract entered into pursuant to this advertisement, Disadvantaged Business Enterprises will be afforded full opportunity to submit bids in response to this invitation and will not be discriminated against on the grounds of race, color or national origin in consideration for an award. Also, the Bidder's attention is called to the Standard Federal Equal Employment Opportunity Construction Contract Specifications (Executive Order 11246) which is a part of the Contract proposal. All of these activities shall be done in accordance will Title VI of the 1964 Civil Rights Act, as amended.

It is the goal of the Department of Transportation that Disadvantaged Business Enterprises participate in all Federal-Aid Contracts. The total Disadvantaged Business (DBE) goal for this project is **25 %**. In accordance will Surface Transportation and Uniform Relocation Assistance Act of 1987, Women are included in the definition of DBE and will be counted toward meeting this goal. THE CONTRACTOR SUBMITTING A BID ON THIS CONTRACT WILL SUBMIT A DBE PARTICIPATION PROGRAM IN CONFORMANCE WITH THE CONTRACT SPECIFICATIONS.

Plans, specifications and other contract Documents may be examined without charge at the Baltimore City Department of Public Works Service Center located on the first floor of the Abel Wolman Municipal Building, Baltimore Maryland, 21202 on or after **July 22 , 2011** and copies thereof may be obtained on payment of **FIVE HUNDRED DOLLARS AND NO CENTS ($500.00)**. Payment will not be refunded.

The Cost Qualification Range for this work shall be **$30,000,000.00** to **$40,000,000.00**. A **MANDATORY** "Pre-Bidding Information" session will be conducted at **9:00 A.M.** on **August 2, 2011,** at **4th Floor Conference Room, 7 East Redwood Street, Baltimore, MD 21202**

NOTE: THIS CONTRACT IS SUBJECT TO A PERFORMANCE EVALUATION BY THE DEPARTMENT OF TRANSPORTATION.

The Standard Specifications for Construction and Materials, Maryland Department of Transportation, State Highway Administration, dated, July, 2008, are to be used in this contract.

Each Bid must be accompanied by a Certified Check of the Bidder or Bank Cashier's Check or Bank Treasurer's Check drawn on a solvent Clearinghouse made payable to the Mayor and City Council of Baltimore, or a Bid Bond executed on the Form as provided in the Bid or Proposal, for an amount which is determined by multiplying the Total Bid or Proposal submitted by five percent (5%).

The successful Bidder will be required to give both Performance Bond and Payment Bond in the amount of the Contract price.

The Board of Estimates reserves the right to reject any and all Bids and/or waive technical defects if in its judgement, the interest of the Mayor and City Council may so require.

Bid when filed shall be irrevocable. Attention of Bidders is called to the Minimum Wage Rates to be paid on this project.

All Contractors Bidding on this Contract must first be Prequalified by the City of Baltimore Contractor's Qualification Committee, 751 Eastern Avenue, Baltimore Maryland 21202, whose recommendations for an assigned Dollar Work Capacity Rating and Work Classification(s) are effective after ratification and confirmation by the Board of Estimates. Contractors will not be permitted to Bid for any single contract having a Dollar Value in excess of the Contractor's assigned Work Capacity Rating and will not be awarded any Contract if the Contract Dollar Value, when added to the Contractor's uncompleted backlog at time of award, exceeds the Contractor's Assigned Work Capacity Rating. Subcontractors intending to perform work in excess of $25,000 on this Contract must have established Qualification for an adequate Work Capacity Rating and the necessary Work Classification(s) before they are permitted to commence work. **If a bid is submitted by a joint venture ("JV"), then in that event, the document that established the JV shall be submitted with the bid for verification purposes.**

Contractors whose Capacity Rating does not meet the lower limit of the Qualification Range, may obtain Plans and Proposals marked NOT FOR BIDDING PURPOSES.

BIDDERS SHALL BE RESTRICTED TO THOSE PREQULIFIED IN THE FOLLOWING WORK CATEGORY: **C03300 (CONCRETE CONSTRUCTION)**.

APPROVED:

Director,
Department of Transportation

APPROVED:

Chief, Transportation Engineering
& Construction Division

APPROVED:

Clerk, Board of Estimates

APPROVED:

Chief Solicitor

CONTRACTOR REGISTRATION REQUIREMENTS

On all Federal-Aid funded contracts, the Administration is requiring that Contractors have an active Dun and Bradstreet Data Universal Numbering System (DUNS) and be registered in the Central Contractor Registration (CCR) database prior to Award of Contract.

The Contractor DUNS number is a unique nine-digit number issued by Dun & Bradstreet, followed by the optional 4 digit DUNS Plus number (reported as "999999999.9999"). A DUNS number can be obtained on-line at http://fedgov.dnb.com/webform.

The Central Contractor Registration is the primary registrant database for the U.S. Federal Government. CCR collects, validates, stores and disseminates data in support of agency acquisition missions. Contractors can register on-line at https://www.bpn.gov/ccr/default.aspx.

NOTICE TO ALL HOLDERS OF THIS CONTRACT DOCUMENT

MANUAL ON UNIFORM TRAFFIC CONTROL DEVICES (MUTCD) REQUIREMENTS

On December 16, 2009 a final rule adopting the 2009 Edition of the Federal Highway Administration's (FHWA) Manual on Uniform Traffic Control Devices (MUTCD) was published in the Federal Register. States must adopt the 2009 National MUTCD, or a State Manual having similar standards, as their legal State standard for traffic control devices within two years.

Notwithstanding any reference to the standards presented in the 2006 MdMUTCD, all traffic control devices (temporary or permanent) utilized on Administration projects shall be in conformance with the requirements provided in the 2009 Edition of the FHWA's MUTCD for Streets and Highways.

NOTICE TO ALL HOLDERS OF THIS CONTRACT DOCUMENT

NATIONAL COOPERATIVE HIGHWAY RESEARCH PROGRAM (NCHRP) REPORT 350 AND THE MANUAL FOR ASSESSING SAFETY HARDWARE (MASH) IMPLEMENTATION SCHEDULE FOR DEVICES USED IN THE MAINTENANCE OF TRAFFIC

Except as otherwise specified in this Section, all items for the maintenance of traffic, including those listed under the following categories, shall be crashworthy in conformance with Level 3 or other Level as specified by the Engineer in conformance with the safety crash testing and performance criteria published in the National Cooperative Highway Research Program (NCHRP) Report 350, "Recommended Procedures for the Safety Performance Evaluation of Highway Features" or the Manual for Assessing Safety Hardware (MASH). When conformance with NCHRP Report 350 or MASH is required, the Contractor shall provide the Engineer with the manufacturers' certifications that the devices comply with the specified criteria.

Unless specifically waived by an attachment to these Contract Provisions, devices must be approved by the Office of Traffic and Safety.

Category 1 Devices

These devices are cones, tubular markers, flexible delineator posts, and drums, all without any accessories or attachments, which are used for channelization and delineation.

Category 2 Devices

These devices are Type I, II, and III barricades; portable sign supports with signs; intrusion alarms; and drums, vertical panels, and cones, all with accessories or attachments.

Category 3 Devices

(a) Truck Mounted Attenuators (TMAs) and Trailer Truck Mounted Attenuators (TTMAs).

(b) Temporary Barrier.

(1) Concrete Barrier.

(2) Traffic Barrier W Beam and Water Filled Barrier.

(3) Steel/Aluminum Barrier.

(c) Temporary End Treatments.

Category 4 Devices

These devices are area lighting supports, arrow panels, and portable variable message signs that are usually portable or trailer-mounted.

(NCHRP) REPORT 350 AND MASH IMPLEMENTATION SCHEDULE

WORK ZONE DEVICES	IMPLEMENTATION SCHEDULE TO CONFORM TO NCHRP REPORT 350 OR MASH CRITERIA
CATEGORY 1 Cones, tubular markers, flexible delineator posts, and drums (all without any accessories or attachments)	All devices shall conform to NCHRP Report 350 or MASH criteria.
CATEGORY 2 Type I, II, and III barricades; portable signs supports with signs; intrusion alarms; and drums, vertical panels, and cones (all with accessories or attachments)	All devices shall conform to NCHRP Report 350 or MASH criteria.
CATEGORY 3 (a) Truck Mounted Attenuators (TMAs); Trailer Truck Mounted Attenuators (TTMAs) (b) Temporary Barriers (1) Concrete Barrier (2) Traffic Barrier W Beam and Water Filled Barrier (3) Steel/Aluminum Barrier (c) Temporary End Treatments	All devices shall conform to NCHRP Report 350 or MASH criteria.
CATEGORY 4 Portable trailer mounted devices including area lighting supports, arrow panels, and changeable message signs	The Contractor may use devices that do not conform to NCHRP Report 350 or MASH criteria, until compliance dates are established. Use of these devices shall comply with the provisions of Part 6 of the MUTCD.

OCCUPYING WETLANDS

The Contractor is hereby alerted to the importance of preserving wetland areas. The City, in conjunction with the various environmental agencies, has developed these Contract Documents so as to minimize or eliminate disturbance and damage to existing wetland areas. In order to accomplish this, the following must be rigidly adhered to:

(a) Prior to performing any work on the project, the areas of wetland will be identified and marked as directed by the City. All personnel of the Contractor or sub-contractors shall be alerted to these designated areas.

(b) The Contractor or sub-contractors shall not impact any wetland or waterway, whether it be permanently or temporarily unless otherwise stipulated in the permit application and approved as an authorized action by the appropriate regulatory agency. No fill shall be placed in these areas without a permit.

(c) If a Contractor or sub-contractor has to impact a wetland or waterway that is not covered by an existing wetland permit, they shall immediately notify the Engineer. The Engineer will notify the Department of Public Works to determine the extent of any permit modification. At that time the Department will request a permit modification or submit a permit application.

(d) If the Contractor impacts any wetland or waterway for which they do not have a wetland permit, they shall be responsible for restoring the wetland areas and possibly mitigating the wetland impacts to the full satisfaction of the environmental agencies, which could include monetary compensation.

(e) The cost of restoration and mitigation of the impacted areas shall be at no additional cost to the City.

The importance of not abusing the wetland areas cannot be overemphasized. Abuse of wetland areas could jeopardize the operation of the total Contract and could be cause for a shut-down. If a shut-down occurs because of the Contractor's failure to secure the required permits (i.e. the Contractor's method of work includes impacts not approved by previously acquired permits), the Contractor's negligence or operations, all costs and damages to the Contractor and to the State will be at no additional cost to the City. Noncompliance with these requirements will not be considered for an extension of Contract time.

REQUIRED CONTRACT PROVISIONS
FEDERAL-AID CONSTRUCTION CONTRACTS

		Page
I.	General	1
II.	Nondiscrimination	1
III.	Nonsegregated Facilities	3
IV.	Payment of Predetermined Minimum Wage	3
V.	Statements and Payrolls	6
VI.	Record of Materials, Supplies, and Labor	6
VII.	Subletting or Assigning the Contract	7
VIII.	Safety: Accident Prevention	7
IX.	False Statements Concerning Highway Projects	7
X.	Implementation of Clean Air Act and Federal Water Pollution Control Act	8
XI.	Certification Regarding Debarment, Suspension, Ineligibility, and Voluntary Exclusion	8
XII.	Certification Regarding Use of Contract Funds for Lobbying	9

ATTACHMENTS

A. Employment Preference for Appalachian Contracts (included in Appalachian contracts only)

I. GENERAL

1. These contract provisions shall apply to all work performed on the contract by the contractor's own organization and with the assistance of workers under the contractor's immediate superintendence and to all work performed on the contract by piecework, station work, or by subcontract.

2. Except as otherwise provided for in each section, the contractor shall insert in each subcontract all of the stipulations contained in these Required Contract Provisions, and further require their inclusion in any lower tier subcontract or purchase order that may in turn be made. The Required Contract Provisions shall not be incorporated by reference in any case. The prime contractor shall be responsible for compliance by any subcontractor or lower tier subcontractor with these Required Contract Provisions.

3. A breach of any of the stipulations contained in these Required Contract Provisions shall be sufficient grounds for termination of the contract.

4. A breach of the following clauses of the Required Contract Provisions may also be grounds for debarment as provided in 29 CFR 5.12:

Section I, paragraph 2;
Section IV, paragraphs 1, 2, 3, 4, and 7;
Section V, paragraphs 1 and 2a through 2g.

5. Disputes arising out of the labor standards provisions of Section IV (except paragraph 5) and Section V of these Required Contract Provisions shall not be subject to the general disputes clause of this contract. Such disputes shall be resolved in accordance with the procedures of the U.S. Department of Labor (DOL) as set forth in 29 CFR 5, 6, and 7. Disputes within the meaning of this clause include disputes between the contractor (or any of its subcontractors) and the contracting agency, the DOL, or the contractor's employees or their representatives.

6. **Selection of Labor:** During the performance of this contract, the contractor shall not:

a. discriminate against labor from any other State, possession, or territory of the United States (except for employment preference for Appalachian contracts, when applicable, as specified in Attachment A), or

b. employ convict labor for any purpose within the limits of the project unless it is labor performed by convicts who are on parole, supervised release, or probation.

II. NONDISCRIMINATION

(Applicable to all Federal-aid construction contracts and to all related subcontracts of $10,000 or more.)

1. **Equal Employment Opportunity:** Equal employment opportunity (EEO) requirements not to discriminate and to take affirmative action to assure equal opportunity as set forth under laws, executive orders, rules, regulations (28 CFR 35, 29 CFR 1630 and 41 CFR 60) and orders of the Secretary of Labor as modified by the provisions prescribed herein, and imposed pursuant to 23 U.S.C. 140 shall constitute the EEO and specific affirmative action standards for the contractor's project activities under this contract. The Equal Opportunity Construction Contract Specifications set forth under 41 CFR 60-4.3 and the provisions of the American Disabilities Act of 1990 (42 U.S.C. 12101 et seq.) set forth under 28 CFR 35 and 29 CFR 1630 are incorporated by reference in this contract. In the execution of this contract, the contractor agrees to comply with the following minimum specific requirement activities of EEO:

a. The contractor will work with the State highway agency (SHA) and the Federal Government in carrying out EEO obligations and in their review of his/her activities under the contract.

b. The contractor will accept as his operating policy the following statement:

"It is the policy of this Company to assure that applicants are employed, and that employees are treated during employment, without regard to their race, religion, sex, color, national origin, age or disability. Such action shall include: employment, upgrading, demotion, or transfer; recruitment or recruitment advertising; layoff or termination; rates of pay or other forms of compensation; and selection for training, including apprenticeship, preapprenticeship, and/or on-the-job training."

2. **EEO Officer:** The contractor will designate and make known to the SHA contracting officers an EEO Officer who will have the responsibility for and must be capable of effectively administering and promoting an active contractor program of EEO and who must be assigned adequate authority and responsibility to do so.

3. **Dissemination of Policy:** All members of the contractor's staff who are authorized to hire, supervise, promote, and discharge employees, or who recommend such action, or who are substantially involved in such action, will be made fully cognizant of, and will implement, the contractor's EEO policy and contractual responsibilities to provide EEO in each grade and classification of employment. To ensure that the above agreement will be met, the following actions will be taken as a minimum:

a. Periodic meetings of supervisory and personnel office employees will be conducted before the start of work and then not less often than once every six months, at which time the contractor's EEO policy and its implementation will be reviewed and explained. The meetings will be conducted by the EEO Officer.

b. All new supervisory or personnel office employees will be given a thorough indoctrination by the EEO Officer, covering all major aspects of the contractor's EEO obligations within thirty days following their reporting for duty with the contractor.

c. All personnel who are engaged in direct recruitment for the project will be instructed by the EEO Officer in the contractor's procedures for locating and hiring minority group employees.

d. Notices and posters setting forth the contractor's EEO policy will be placed in areas readily accessible to employees, applicants for employment and potential employees.

e. The contractor's EEO policy and the procedures to implement such policy will be brought to the attention of employees by means of meetings, employee handbooks, or other appropriate means.

4. **Recruitment:** When advertising for employees, the contractor will include in all advertisements for employees the notation: "An Equal Opportunity Employer." All such advertisements will be placed in publications having a large circulation among minority groups in the area from which the project work force would normally be derived.

a. The contractor will, unless precluded by a valid bargaining agreement, conduct systematic and direct recruitment through public and private employee referral sources likely to yield qualified minority group applicants. To meet this requirement, the contractor will identify sources of potential minority group employees, and establish with such identified sources procedures whereby minority group applicants may be referred to the contractor for employment consideration.

b. In the event the contractor has a valid bargaining agreement providing for exclusive hiring hall referrals, he is expected to observe the provisions of that agreement to the extent that the system permits the contractor's compliance with EEO contract provisions. (The DOL has held that where implementation of such agreements have the effect of discriminating against minorities or women, or obligates the contractor to do the same, such implementation violates Executive Order 11246, as amended.)

c. The contractor will encourage his present employees to refer minority group applicants for employment. Information and procedures with regard to referring minority group applicants will be discussed with employees.

5. **Personnel Actions:** Wages, working conditions, and employee benefits shall be established and administered, and personnel actions of every type, including hiring, upgrading, promotion, transfer, demotion, layoff, and termination, shall be taken without regard to race, color, religion, sex, national origin, age or disability. The following procedures shall be followed:

a. The contractor will conduct periodic inspections of project sites to insure that working conditions and employee facilities do not indicate discriminatory treatment of project site personnel.

b. The contractor will periodically evaluate the spread of wages paid within each classification to determine any evidence of discriminatory wage practices.

c. The contractor will periodically review selected personnel actions in depth to determine whether there is evidence of discrimination. Where evidence is found, the contractor will promptly take corrective action. If the review indicates that the discrimination may extend beyond the actions reviewed, such corrective action shall include all affected persons.

d. The contractor will promptly investigate all complaints of alleged discrimination made to the contractor in connection with his obligations under this contract, will attempt to resolve such complaints, and will take appropriate corrective action within a reasonable time. If the investigation indicates that the discrimination may affect persons other than the complainant, such corrective action shall include such other persons. Upon completion of each investigation, the contractor will inform every complainant of all of his avenues of appeal.

6. **Training and Promotion:**

a. The contractor will assist in locating, qualifying, and increasing the skills of minority group and women employees, and applicants for employment.

b. Consistent with the contractor's work force requirements and as permissible under Federal and State regulations, the contractor shall make full use of training programs, i.e., apprenticeship, and on-the-job training programs for the geographical area of contract performance. Where feasible, 25 percent of apprentices or trainees in each occupation shall be in their first year of apprenticeship or training. In the event a special provision for training is provided under this contract, this subparagraph will be superseded as indicated in the special provision.

c. The contractor will advise employees and applicants for employment of available training programs and entrance requirements for each.

d. The contractor will periodically review the training and promotion potential of minority group and women employees and will encourage eligible employees to apply for such training and promotion.

7. **Unions:** If the contractor relies in whole or in part upon unions as a source of employees, the contractor will use his/her best efforts to obtain the cooperation of such unions to increase opportunities for minority groups and women within the unions, and to effect referrals by such unions of minority and female employees. Actions by the contractor either directly or through a contractor's association acting as agent will include the procedures set forth below:

a. The contractor will use best efforts to develop, in cooperation with the unions, joint training programs aimed toward qualifying more minority group members and women for membership in the unions and increasing the skills of minority group employees and women so that they may qualify for higher paying employment.

b. The contractor will use best efforts to incorporate an EEO clause into each union agreement to the end that such union will be contractually bound to refer applicants without regard to their race, color, religion, sex, national origin, age or disability.

c. The contractor is to obtain information as to the referral practices and policies of the labor union except that to the extent such information is within the exclusive possession of the labor union and such labor union refuses to furnish such information to the contractor, the contractor shall so certify to the SHA and shall set forth what efforts have been made to obtain such information.

d. In the event the union is unable to provide the contractor with a reasonable flow of minority and women referrals within the time limit set forth in the collective bargaining agreement, the contractor will, through independent recruitment efforts, fill the employment vacancies without regard to race, color, religion, sex, national origin, age or disability; making full efforts to obtain qualified and/or qualifiable minority group persons and women. (The DOL has held that it shall be no excuse that the union with which the contractor has a collective bargaining agreement providing for exclusive referral failed to refer minority employees.) In the event the union referral practice prevents the contractor from meeting the obligations pursuant to Executive Order 11246, as amended, and these special provisions, such contractor shall immediately notify the SHA.

8. **Selection of Subcontractors, Procurement of Materials and Leasing of Equipment:** The contractor shall not discriminate on the grounds of race, color, religion, sex, national origin, age or disability in the selection and retention of subcontractors, including procurement of materials and leases of equipment.

a. The contractor shall notify all potential subcontractors and suppliers of his/her EEO obligations under this contract.

b. Disadvantaged business enterprises (DBE), as defined in 49 CFR 23, shall have equal opportunity to compete for and perform subcontracts which the contractor enters into pursuant to this contract. The contractor will use his best efforts to solicit bids from and to utilize DBE subcontractors or subcontractors with meaningful minority group and female representation among their employees. Contractors shall obtain lists of DBE construction firms from SHA personnel.

c. The contractor will use his best efforts to ensure subcontractor compliance with their EEO obligations.

9. **Records and Reports:** The contractor shall keep such records as necessary to document compliance with the EEO requirements. Such records shall be retained for a period of three years following completion of the contract work and shall be available at reasonable times and places for inspection by authorized representatives of the SHA and the FHWA.

a. The records kept by the contractor shall document the following:

(1) The number of minority and non-minority group members and women employed in each work classification on the project;

(2) The progress and efforts being made in cooperation with unions, when applicable, to increase employment opportunities for minorities and women;

(3) The progress and efforts being made in locating, hiring, training, qualifying, and upgrading minority and female employees; and

(4) The progress and efforts being made in securing the services of DBE subcontractors or subcontractors with meaningful minority and female representation among their employees.

b. The contractors will submit an annual report to the SHA each July for the duration of the project, indicating the number of minority, women, and non-minority group employees currently engaged in each work classification required by the contract work. This information is to be reported on Form FHWA-1391. If on-thejob training is being required by special provision, the contractor will be required to collect and report training data.

III. NONSEGREGATED FACILITIES

(Applicable to all Federal-aid construction contracts and to all related subcontracts of $10,000 or more.)

a. By submission of this bid, the execution of this contract or subcontract, or the consummation of this material supply agreement or purchase order, as appropriate, the bidder, Federal-aid construction contractor, subcontractor, material supplier, or vendor, as appropriate, certifies that the firm does not maintain or provide for its employees any segregated facilities at any of its establishments, and that the firm does not permit its employees to perform their services at any location, under its control, where segregated facilities are maintained. The firm agrees that a breach of this certification is a violation of the EEO provisions of this contract. The firm further certifies that no employee will be denied access to adequate facilities on the basis of sex or disability.

b. As used in this certification, the term "segregated facilities" means any waiting rooms, work areas, restrooms and washrooms, restaurants and other eating areas, timeclocks, locker rooms, and other storage or dressing areas, parking lots, drinking fountains, recreation or entertainment areas, transportation, and housing facilities provided for employees which are segregated by explicit directive, or are, in fact, segregated on the basis of race, color, religion, national origin, age or disability, because of habit, local custom, or otherwise. The only exception will be for the disabled when the demands for accessibility override (e.g. disabled parking).

c. The contractor agrees that it has obtained or will obtain identical certification from proposed subcontractors or material suppliers prior to award of subcontracts or consummation of material supply agreements of $10,000 or more and that it will retain such certifications in its files.

IV. PAYMENT OF PREDETERMINED MINIMUM WAGE

(Applicable to all Federal-aid construction contracts exceeding $2,000 and to all related subcontracts, except for projects located on roadways classified as local roads or rural minor collectors, which are exempt.)

1. **General:**

a. All mechanics and laborers employed or working upon the site of the work will be paid unconditionally and not less often than once a week and without subsequent deduction or rebate on any account [except such payroll deductions as are permitted by regulations (29 CFR 3) issued by the Secretary of Labor under the Copeland Act (40 U.S.C. 276c)] the full amounts of wages and bona fide fringe benefits (or cash equivalents thereof) due at time of payment. The payment shall be computed at wage rates not less than those contained in the wage determination of the Secretary of Labor (hereinafter "the wage determination") which is attached hereto and made a part hereof, regardless of any contractual relationship which may be alleged to exist between the contractor or its subcontractors and such laborers and mechanics. The wage determination (including any additional classifications and wage rates conformed under paragraph 2 of this Section IV

and the DOL poster (WH-1321) or Form FHWA-1495) shall be posted at all times by the contractor and its subcontractors at the site of the work in a prominent and accessible place where it can be easily seen by the workers. For the purpose of this Section, contributions made or costs reasonably anticipated for bona fide fringe benefits under Section 1(b)(2) of the Davis-Bacon Act (40 U.S.C. 276a) on behalf of laborers or mechanics are considered wages paid to such laborers or mechanics, subject to the provisions of Section IV, paragraph 3b, hereof. Also, for the purpose of this Section, regular contributions made or costs incurred for more than a weekly period (but not less often than quarterly) under plans, funds, or programs, which cover the particular weekly period, are deemed to be constructively made or incurred during such weekly period. Such laborers and mechanics shall be paid the appropriate wage rate and fringe benefits on the wage determination for the classification of work actually performed, without regard to skill, except as provided in paragraphs 4 and 5 of this Section IV.

b. Laborers or mechanics performing work in more than one classification may be compensated at the rate specified for each classification for the time actually worked therein, provided, that the employer's payroll records accurately set forth the time spent in each classification in which work is performed.

c. All rulings and interpretations of the Davis-Bacon Act and related acts contained in 29 CFR 1, 3, and 5 are herein incorporated by reference in this contract.

2. **Classification:**

a. The SHA contracting officer shall require that any class of laborers or mechanics employed under the contract, which is not listed in the wage determination, shall be classified in conformance with the wage determination.

b. The contracting officer shall approve an additional classification, wage rate and fringe benefits only when the following criteria have been met:

(1) the work to be performed by the additional classification requested is not performed by a classification in the wage determination;

(2) the additional classification is utilized in the area by the construction industry;

(3) the proposed wage rate, including any bona fide fringe benefits, bears a reasonable relationship to the wage rates contained in the wage determination; and

(4) with respect to helpers as defined in Section IV.4(c), when such a classification prevails in the area in which the work is performed.

c. If the contractor or subcontractors, as appropriate, the laborers and mechanics (if known) to be employed in the additional classification or their representatives, and the contracting officer agree on the classification and wage rate (including the amount designated for fringe benefits where appropriate), a report of the action taken shall be sent by the contracting officer to the DOL, Administrator of the Wage and Hour Division, Employment Standards Administration, Washington, D.C. 20210. The Wage and Hour Administrator, or an authorized representative, will approve, modify, or disapprove every additional classification action within 30 days of receipt and so advise the contracting officer or will notify the contracting officer within the 30-day period that additional time is necessary.

d. In the event the contractor or subcontractors, as appropriate, the laborers or mechanics to be employed in the additional classification or their representatives, and the contracting officer do not agree on the proposed classification and wage rate (including the amount designated for fringe benefits, where appropriate), the contracting officer shall refer the questions, including the views of all interested parties and the recommendation of the contracting officer, to the Wage and Hour Administrator for determination. Said Administrator, or an authorized representative, will issue a determination within 30 days of receipt and so advise the contracting officer or will notify the contracting officer within the 30-day period that additional time is necessary

e. The wage rate (including fringe benefits where appropriate) determined pursuant to paragraph 2c or 2d of this Section IV shall be paid to all workers performing work in the additional classification from the first day on which work is performed in the classification.

3. **Payment of Fringe Benefits:**

a. Whenever the minimum wage rate prescribed in the contract for a class of laborers or mechanics includes a fringe benefit which is not expressed as an hourly rate, the contractor or subcontractors, as appropriate, shall either pay the benefit as stated in the wage determination or shall pay another bona fide fringe benefit or an hourly case equivalent thereof.

b. If the contractor or subcontractor, as appropriate, does not make payments to a trustee or other third person, he/she may consider as a part of the wages of any laborer or mechanic the amount of any costs reasonably anticipated in providing bona fide fringe benefits under a plan or program, provided, that the Secretary of Labor has found, upon the written request of the contractor, that the applicable standards of the Davis-Bacon Act have been met. The Secretary of Labor may require the contractor to set aside in a separate account assets for the meeting of obligations under the plan or program.

4. **Apprentices and Trainees (Programs of the U.S. DOL) and Helpers:**

a. Apprentices:

(1) Apprentices will be permitted to work at less than the predetermined rate for the work they performed when they are employed pursuant to and individually registered in a bona fide apprenticeship program registered with the DOL, Employment and Training Administration, Bureau of Apprenticeship and Training, or with a State apprenticeship agency recognized by the Bureau, or if a person is employed in his/her first 90 days of probationary employment as an apprentice in such an apprenticeship program, who is not individually registered in the program, but who has been certified by the Bureau of Apprenticeship and Training or a State apprenticeship agency (where appropriate) to be eligible for probationary employment as an apprentice.

(2) The allowable ratio of apprentices to journeyman-level employees on the job site in any craft classification shall not be greater than the ratio permitted to the contractor as to the entire work force under the registered program. Any employee listed on a payroll at an apprentice wage rate, who is not registered or otherwise employed as stated above, shall be paid not less than the applicable wage rate listed in the wage determination for the classification of work actually performed. In addition, any apprentice performing work on the job site in excess of the ratio permitted under the registered program shall be paid not less than the applicable wage rate on the wage determination for the work

actually performed. Where a contractor or subcontractor is performing construction on a project in a locality other than that in which its program is registered, the ratios and wage rates (expressed in percentages of the journeyman-level hourly rate) specified in the contractor's or subcontractor's registered program shall be observed.

(3) Every apprentice must be paid at not less than the rate specified in the registered program for the apprentice's level of progress, expressed as a percentage of the journeyman-level hourly rate specified in the applicable wage determination. Apprentices shall be paid fringe benefits in accordance with the provisions of the apprenticeship program. If the apprenticeship program does not specify fringe benefits, apprentices must be paid the full amount of fringe benefits listed on the wage determination for the applicable classification. If the Administrator for the Wage and Hour Division determines that a different practice prevails for the applicable apprentice classification, fringes shall be paid in accordance with that determination.

(4) In the event the Bureau of Apprenticeship and Training, or a State apprenticeship agency recognized by the Bureau, withdraws approval of an apprenticeship program, the contractor or subcontractor will no longer be permitted to utilize apprentices at less than the applicable predetermined rate for the comparable work performed by regular employees until an acceptable program is approved.

b. Trainees:

(1) Except as provided in 29 CFR 5.16, trainees will not be permitted to work at less than the predetermined rate for the work performed unless they are employed pursuant to and individually registered in a program which has received prior approval, evidenced by formal certification by the DOL, Employment and Training Administration.

(2) The ratio of trainees to journeyman-level employees on the job site shall not be greater than permitted under the plan approved by the Employment and Training Administration. Any employee listed on the payroll at a trainee rate who is not registered and participating in a training plan approved by the Employment and Training Administration shall be paid not less than the applicable wage rate on the wage determination for the classification of work actually performed. In addition, any trainee performing work on the job site in excess of the ratio permitted under the registered program shall be paid not less than the applicable wage rate on the wage determination for the work actually performed.

(3) Every trainee must be paid at not less than the rate specified in the approved program for his/her level of progress, expressed as a percentage of the journeyman-level hourly rate specified in the applicable wage determination. Trainees shall be paid fringe benefits in accordance with the provisions of the trainee program. If the trainee program does not mention fringe benefits, trainees shall be paid the full amount of fringe benefits listed on the wage determination unless the Administrator of the Wage and Hour Division determines that there is an apprenticeship program associated with the corresponding journeyman-level wage rate on the wage determination which provides for less than full fringe benefits for apprentices, in which case such trainees shall receive the same fringe benefits as apprentices.

(4) In the event the Employment and Training Administration withdraws approval of a training program, the contractor or subcontractor will no longer be permitted to utilize trainees at less than the applicable predetermined rate for the work performed until an acceptable program is approved.

c. Helpers:

Helpers will be permitted to work on a project if the helper classification is specified on an applicable wage determination or is approved pursuant to the conformance procedure set forth in Section IV.2. Any worker listed on a payroll at a helper wage rate, shall be paid not less than the applicable wage rate on the wage determination for the classification of work actually performed.

5. **Apprentices and Trainees (Programs of the U.S. DOT):**

Apprentices and trainees working under apprenticeship and skill training programs which have been certified by the Secretary of Transportation as promoting EEO in connection with Federal-aid highway construction programs are not subject to the requirements of paragraph 4 of this Section IV. The straight time hourly wage rates for apprentices and trainees under such programs will be established by the particular programs. The ratio of apprentices and trainees to journeymen shall not be greater than permitted by the terms of the particular program.

6. **Withholding:**

The SHA shall upon its own action or upon written request of an authorized representative of the DOL withhold, or cause to be withheld, from the contractor or subcontractor under this contract or any other Federal contract with the same prime contractor, or any other Federally-assisted contract subject to Davis-Bacon prevailing wage requirements which is held by the same prime contractor, as much of the accrued payments or advances as may be considered necessary to pay laborers and mechanics, including apprentices, trainees, and helpers, employed by the contractor or any subcontractor the full amount of wages required by the contract. In the event of failure to pay any laborer or mechanic, including any apprentice, trainee, or helper, employed or working on the site of the work, all or part of the wages required by the contract, the SHA contracting officer may, after written notice to the contractor, take such action as may be necessary to cause the suspension of any further payment, advance, or guarantee of funds until such violations have ceased.

7. **Overtime Requirements:**

No contractor or subcontractor contracting for any part of the contract work which may require or involve the employment of laborers, mechanics, watchmen, or guards (including apprentices, trainees, and helpers described in paragraphs 4 and 5 above) shall require or permit any laborer, mechanic, watchman, or guard in any workweek in which he/she is employed on such work, to work in excess of 40 hours in such workweek unless such laborer, mechanic, watchman, or guard receives compensation at a rate not less than one-and-one-half times his/her basic rate of pay for all hours worked in excess of 40 hours in such workweek.

8. **Violation:**

Liability for Unpaid Wages; Liquidated Damages: In the event of any violation of the clause set forth in paragraph 7 above, the contractor and any subcontractor responsible thereof shall be liable to the affected employee for his/her unpaid wages. In addition, such contractor and subcontractor shall be liable to the United States (in the case of work done under contract for the District of Columbia or a territory, to such District or to such territory) for liquidated damages. Such liquidated damages shall be computed with respect to each individual laborer, mechanic, watchman, or guard employed in violation of the clause set forth in paragraph 7, in the sum of $10 for each calendar day on which

such employee was required or permitted to work in excess of the standard work week of 40 hours without payment of the overtime wages required by the clause set forth in paragraph 7.

9. **Withholding for Unpaid Wages and Liquidated Damages:**

The SHA shall upon its own action or upon written request of any authorized representative of the DOL withhold, or cause to be withheld, from any monies payable on account of work performed by the contractor or subcontractor under any such contract or any other Federal contract with the same prime contractor, or any other Federally-assisted contract subject to the Contract Work Hours and Safety Standards Act, which is held by the same prime contractor, such sums as may be determined to be necessary to satisfy any liabilities of such contractor or subcontractor for unpaid wages and liquidated damages as provided in the clause set forth in paragraph 8 above.

V. STATEMENTS AND PAYROLLS

(Applicable to all Federal-aid construction contracts exceeding $2,000 and to all related subcontracts, except for projects located on roadways classified as local roads or rural collectors, which are exempt.)

1. **Compliance with Copeland Regulations (29 CFR 3):**

The contractor shall comply with the Copeland Regulations of the Secretary of Labor which are herein incorporated by reference.

2. **Payrolls and Payroll Records:**

a. Payrolls and basic records relating thereto shall be maintained by the contractor and each subcontractor during the course of the work and preserved for a period of 3 years from the date of completion of the contract for all laborers, mechanics, apprentices, trainees, watchmen, helpers, and guards working at the site of the work.

b. The payroll records shall contain the name, social security number, and address of each such employee; his or her correct classification; hourly rates of wages paid (including rates of contributions or costs anticipated for bona fide fringe benefits or cash equivalent thereof the types described in Section 1(b)(2)(B) of the Davis Bacon Act); daily and weekly number of hours worked; deductions made; and actual wages paid. In addition, for Appalachian contracts, the payroll records shall contain a notation indicating whether the employee does, or does not, normally reside in the labor area as defined in Attachment A, paragraph 1. Whenever the Secretary of Labor, pursuant to Section IV, paragraph 3b, has found that the wages of any laborer or mechanic include the amount of any costs reasonably anticipated in providing benefits under a plan or program described in Section 1(b)(2)(B) of the Davis Bacon Act, the contractor and each subcontractor shall maintain records which show that the commitment to provide such benefits is enforceable, that the plan or program is financially responsible, that the plan or program has been communicated in writing to the laborers or mechanics affected, and show the cost anticipated or the actual cost incurred in providing benefits. Contractors or subcontractors employing apprentices or trainees under approved programs shall maintain written evidence of the registration of apprentices and trainees, and ratios and wage rates prescribed in the applicable programs.

c. Each contractor and subcontractor shall furnish, each week in which any contract work is performed, to the SHA resident engineer a payroll of wages paid each of its employees (including apprentices, trainees, and helpers, described in Section IV, paragraphs 4 and 5, and watchmen and guards engaged on work during the preceding weekly payroll period). The payroll submitted shall set out accurately and completely all of the information required to be maintained under paragraph 2b of this Section V. This information may be submitted in any form desired. Optional Form WH-347 is available for this purpose and may be purchased from the Superintendent of Documents (Federal stock number 029-005-0014-1), U.S. Government Printing Office, Washington, D.C. 20402. The prime contractor is responsible for the submission of copies of payrolls by all subcontractors.

d. Each payroll submitted shall be accompanied by a "Statement of Compliance," signed by the contractor or subcontractor or his/her agent who pays or supervises the payment of the persons employed under the contract and shall certify the following:

(1) that the payroll for the payroll period contains the information required to be maintained under paragraph 2b of this Section V and that such information is correct and complete;

(2) that such laborer or mechanic (including each helper, apprentice, and trainee) employed on the contract during the payroll period has been paid the full weekly wages earned, without rebate, either directly or indirectly, and that no deductions have been made either directly or indirectly from the full wages earned, other than permissible deductions as set forth in the Regulations, 29 CFR 3;

(3) that each laborer or mechanic has been paid not less that the applicable wage rate and fringe benefits or cash equivalent for the classification of worked performed, as specified in the applicable wage determination incorporated into the contract.

e. The weekly submission of a properly executed certification set forth on the reverse side of Optional Form WH-347 shall satisfy the requirement for submission of the "Statement of Compliance" required by paragraph 2d of this Section V.

f. The falsification of any of the above certifications may subject the contractor to civil or criminal prosecution under 18 U.S.C. 1001 and 31 U.S.C. 231.

g. The contractor or subcontractor shall make the records required under paragraph 2b of this Section V available for inspection, copying, or transcription by authorized representatives of the SHA, the FHWA, or the DOL, and shall permit such representatives to interview employees during working hours on the job. If the contractor or subcontractor fails to submit the required records or to make them available, the SHA, the FHWA, the DOL, or all may, after written notice to the contractor, sponsor, applicant, or owner, take such actions as may be necessary to cause the suspension of any further payment, advance, or guarantee of funds. Furthermore, failure to submit the required records upon request or to make such records available may be grounds for debarment action pursuant to 29 CFR 5.12.

VI. RECORD OF MATERIALS, SUPPLIES, AND LABOR

1. On all Federal-aid contracts on the National Highway System, except those which provide solely for the installation of protective devices at railroad grade crossings, those which are constructed on a force account or direct labor basis, highway beautification contracts, and contracts for which the total final construction cost for roadway and bridge is less than $1,000,000 (23 CFR 635) the contractor shall:

a. Become familiar with the list of specific materials and supplies contained in Form FHWA-47, "Statement of Materials and Labor Used by Contractor of Highway Construction Involving Federal Funds," prior to the commencement of work under this contract.

b. Maintain a record of the total cost of all materials and supplies purchased for and incorporated in the work, and also of the quantities of those specific materials and supplies listed on Form FHWA-47, and in the units shown on Form FHWA-47.

c. Furnish, upon the completion of the contract, to the SHA resident engineer on Form FHWA-47 together with the data required in paragraph 1b relative to materials and supplies, a final labor summary of all contract work indicating the total hours worked and the total amount earned.

2. At the prime contractor's option, either a single report covering all contract work or separate reports for the contractor and for each subcontract shall be submitted.

VII. SUBLETTING OR ASSIGNING THE CONTRACT

1. The contractor shall perform with its own organization contract work amounting to not less than 30 percent (or a greater percentage if specified elsewhere in the contract) of the total original contract price, excluding any specialty items designated by the State. Specialty items may be performed by subcontract and the amount of any such specialty items performed may be deducted from the total original contract price before computing the amount of work required to be performed by the contractor's own organization (23 CFR 635).

a. "Its own organization" shall be construed to include only workers employed and paid directly by the prime contractor and equipment owned or rented by the prime contractor, with or without operators. Such term does not include employees or equipment of a subcontractor, assignee, or agent of the prime contractor.

b. "Specialty Items" shall be construed to be limited to work that requires highly specialized knowledge, abilities, or equipment not ordinarily available in the type of contracting organizations qualified and expected to bid on the contract as a whole and in general are to be limited to minor components of the overall contract.

2. The contract amount upon which the requirements set forth in paragraph 1 of Section VII is computed includes the cost of material and manufactured products which are to be purchased or produced by the contractor under the contract provisions.

3. The contractor shall furnish (a) a competent superintendent or supervisor who is employed by the firm, has full authority to direct performance of the work in accordance with the contract requirements, and is in charge of all construction operations (regardless of who performs the work) and (b) such other of its own organizational resources (supervision, management, and engineering services) as the SHA contracting officer determines is necessary to assure the performance of the contract.

4. No portion of the contract shall be sublet, assigned or otherwise disposed of except with the written consent of the SHA contracting officer, or authorized representative, and such consent when given shall not be construed to relieve the contractor of any responsibility for the fulfillment of the contract. Written consent will be given only after the SHA has assured that each subcontract is evidenced in writing and that it contains all pertinent provisions and requirements of the prime contract.

VIII. SAFETY: ACCIDENT PREVENTION

1. In the performance of this contract the contractor shall comply with all applicable Federal, State, and local laws governing safety, health, and sanitation (23 CFR 635). The contractor shall provide all safeguards, safety devices and protective equipment and take any other needed actions as it determines, or as the SHA contracting officer may determine, to be reasonably necessary to protect the life and health of employees on the job and the safety of the public and to protect property in connection with the performance of the work covered by the contract.

2. It is a condition of this contract, and shall be made a condition of each subcontract, which the contractor enters into pursuant to this contract, that the contractor and any subcontractor shall not permit any employee, in performance of the contract, to work in surroundings or under conditions which are unsanitary, hazardous or dangerous to his/her health or safety, as determined under construction safety and health standards (29 CFR 1926) promulgated by the Secretary of Labor, in accordance with Section 107 of the Contract Work Hours and Safety Standards Act (40 U.S.C. 333).

3. Pursuant to 29 CFR 1926.3, it is a condition of this contract that the Secretary of Labor or authorized representative thereof, shall have right of entry to any site of contract performance to inspect or investigate the matter of compliance with the construction safety and health standards and to carry out the duties of the Secretary under Section 107 of the Contract Work Hours and Safety Standards Act (40 U.S.C. 333).

IX. FALSE STATEMENTS CONCERNING HIGHWAY PROJECTS

In order to assure high quality and durable construction in conformity with approved plans and specifications and a high degree of reliability on statements and representations made by engineers, contractors, suppliers, and workers on Federal-aid highway projects, it is essential that all persons concerned with the project perform their functions as carefully, thoroughly, and honestly as possible. Willful falsification, distortion, or misrepresentation with respect to any facts related to the project is a violation of Federal law. To prevent any misunderstanding regarding the seriousness of these and similar acts, the following notice shall be posted on each Federal-aid highway project (23 CFR 635) in one or more places where it is readily available to all persons concerned with the project:

NOTICE TO ALL PERSONNEL ENGAGED ON FEDERAL-AID HIGHWAY PROJECTS

18 U.S.C. 1020 reads as follows:

"Whoever, being an officer, agent, or employee of the United States, or of any State or Territory, or whoever, whether a person, association, firm, or corporation, knowingly makes any false statement, false representation, or false report as to the character, quality, quantity, or cost of the material used or to be used, or the quantity or quality of the work performed or to be performed, or the cost thereof in connection with the submission of plans, maps, specifications, contracts, or costs of construction on any highway or related project submitted for approval to the Secretary of Transportation; or

Whoever knowingly makes any false statement, false representation, false report or false claim with respect to the character, quality, quantity, or cost of any work performed or to be performed,

or materials furnished or to be furnished, in connection with the construction of any highway or related project approved by the Secretary of Transportation; or

Whoever knowingly makes any false statement or false representation as to material fact in any statement, certificate, or report submitted pursuant to provisions of the Federal-aid Roads Act approved July 1, 1916, (39 Stat. 355), as amended and supplemented;

Shall be fined not more that $10,000 or imprisoned not more than 5 years or both."

X. IMPLEMENTATION OF CLEAN AIR ACT AND FEDERAL WATER POLLUTION CONTROL ACT

(Applicable to all Federal-aid construction contracts and to all related subcontracts of $100,000 or more.)

By submission of this bid or the execution of this contract, or subcontract, as appropriate, the bidder, Federal-aid construction contractor, or subcontractor, as appropriate, will be deemed to have stipulated as follows:

1. That any facility that is or will be utilized in the performance of this contract, unless such contract is exempt under the Clean Air Act, as amended (42 U.S.C. 1857 et seq., as amended by Pub.L. 91-604), and under the Federal Water Pollution Control Act, as amended (33 U.S.C. 1251 et seq., as amended by Pub.L. 92-500), Executive Order 11738, and regulations in implementation thereof (40 CFR 15) is not listed, on the date of contract award, on the U.S. Environmental Protection Agency (EPA) List of Violating Facilities pursuant to 40 CFR 15.20.

2. That the firm agrees to comply and remain in compliance with all the requirements of Section 114 of the Clean Air Act and Section 308 of the Federal Water Pollution Control Act and all regulations and guidelines listed thereunder.

3. That the firm shall promptly notify the SHA of the receipt of any communication from the Director, Office of Federal Activities, EPA, indicating that a facility that is or will be utilized for the contract is under consideration to be listed on the EPA List of Violating Facilities.

4. That the firm agrees to include or cause to be included the requirements of paragraph 1 through 4 of this Section X in every nonexempt subcontract, and further agrees to take such action as the government may direct as a means of enforcing such requirements.

XI. CERTIFICATION REGARDING DEBARMENT, SUSPENSION, INELIGIBILITY AND VOLUNTARY EXCLUSION

1. **Instructions for Certification - Primary Covered Transactions:**
(Applicable to all Federal-aid contracts - 49 CFR 29)

a. By signing and submitting this proposal, the prospective primary participant is providing the certification set out below.

b. The inability of a person to provide the certification set out below will not necessarily result in denial of participation in this covered transaction. The prospective participant shall submit an explanation of why it cannot provide the certification set out below. The certification or explanation will be considered in connection with the department or agency's determination whether to enter into this transaction. However, failure of the prospective primary participant to furnish a certification or an explanation shall disqualify such a person from participation in this transaction.

c. The certification in this clause is a material representation of fact upon which reliance was placed when the department or agency determined to enter into this transaction. If it is later determined that the prospective primary participant knowingly rendered an erroneous certification, in addition to other remedies available to the Federal Government, the department or agency may terminate this transaction for cause of default.

d. The prospective primary participant shall provide immediate written notice to the department or agency to whom this proposal is submitted if any time the prospective primary participant learns that its certification was erroneous when submitted or has become erroneous by reason of changed circumstances.

e. The terms "covered transaction," "debarred," "suspended," "ineligible," "lower tier covered transaction," "participant," "person," "primary covered transaction," "principal," "proposal," and "voluntarily excluded," as used in this clause, have the meanings set out in the Definitions and Coverage sections of rules implementing Executive Order 12549. You may contact the department or agency to which this proposal is submitted for assistance in obtaining a copy of those regulations.

f. The prospective primary participant agrees by submitting this proposal that, should the proposed covered transaction be entered into, it shall not knowingly enter into any lower tier covered transaction with a person who is debarred, suspended, declared ineligible, or voluntarily excluded from participation in this covered transaction, unless authorized by the department or agency entering into this transaction.

g. The prospective primary participant further agrees by submitting this proposal that it will include the clause titled "Certification Regarding Debarment, Suspension, Ineligibility and Voluntary Exclusion-Lower Tier Covered Transaction," provided by the department or agency entering into this covered transaction, without modification, in all lower tier covered transactions and in all solicitations for lower tier covered transactions.

h. A participant in a covered transaction may rely upon a certification of a prospective participant in a lower tier covered transaction that is not debarred, suspended, ineligible, or voluntarily excluded from the covered transaction, unless it knows that the certification is erroneous. A participant may decide the method and frequency by which it determines the eligibility of its principals. Each participant may, but is not required to, check the nonprocurement portion of the "Lists of Parties Excluded From Federal Procurement or Nonprocurement Programs" (Nonprocurement List) which is compiled by the General Services Administration.

i. Nothing contained in the foregoing shall be construed to require establishment of a system of records in order to render in good faith the certification required by this clause. The knowledge and information of participant is not required to exceed that which is normally possessed by a prudent person in the ordinary course of business dealings.

j. Except for transactions authorized under paragraph f of these instructions, if a participant in a covered transaction knowingly enters into a lower tier covered transaction with a person who is suspended, debarred, ineligible, or voluntarily excluded from participation in this transaction, in addition to other remedies available to the Federal Government, the department or agency may terminate this transaction for cause or default.

* * * * *

Certification Regarding Debarment, Suspension, Ineligibility and Voluntary Exclusion--Primary Covered Transactions

1. The prospective primary participant certifies to the best of its knowledge and belief, that it and its principals:

a. Are not presently debarred, suspended, proposed for debarment, declared ineligible, or voluntarily excluded from covered transactions by any Federal department or agency;

b. Have not within a 3-year period preceding this proposal been convicted of or had a civil judgement rendered against them for commission of fraud or a criminal offense in connection with obtaining, attempting to obtain, or performing a public (Federal, State or local) transaction or contract under a public transaction; violation of Federal or State antitrust statutes or commission of embezzlement, theft, forgery, bribery, falsification or destruction of records, making false statements, or receiving stolen property;

c. Are not presently indicted for or otherwise criminally or civilly charged by a governmental entity (Federal, State or local) with commission of any of the offenses enumerated in paragraph 1b of this certification; and

d. Have not within a 3-year period preceding this application/proposal had one or more public transactions (Federal, State or local) terminated for cause or default.

2. Where the prospective primary participant is unable to certify to any of the statements in this certification, such prospective participant shall attach an explanation to this proposal.

* * * * *

2. **Instructions for Certification - Lower Tier Covered Transactions:**

(Applicable to all subcontracts, purchase orders and other lower tier transactions of $25,000 or more - 49 CFR 29)

a. By signing and submitting this proposal, the prospective lower tier is providing the certification set out below.

b. The certification in this clause is a material representation of fact upon which reliance was placed when this transaction was entered into. If it is later determined that the prospective lower tier participant knowingly rendered an erroneous certification, in addition to other remedies available to the Federal Government, the department, or agency with which this transaction originated may pursue available remedies, including suspension and/or debarment.

c. The prospective lower tier participant shall provide immediate written notice to the person to which this proposal is submitted if at any time the prospective lower tier participant learns that its certification was erroneous by reason of changed circumstances.

d. The terms "covered transaction," "debarred," "suspended," "ineligible," "primary covered transaction," "participant," "person," "principal," "proposal," and "voluntarily excluded," as used in this clause, have the meanings set out in the Definitions and Coverage sections of rules implementing Executive Order 12549. You may contact the person to which this proposal is submitted for assistance in obtaining a copy of those regulations.

e. The prospective lower tier participant agrees by submitting this proposal that, should the proposed covered transaction be entered into, it shall not knowingly enter into any lower tier covered transaction with a person who is debarred, suspended, declared ineligible, or voluntarily excluded from participation in this covered transaction, unless authorized by the department or agency with which this transaction originated.

f. The prospective lower tier participant further agrees by submitting this proposal that it will include this clause titled "Certification Regarding Debarment, Suspension, Ineligibility and Voluntary Exclusion-Lower Tier Covered Transaction," without modification, in all lower tier covered transactions and in all solicitations for lower tier covered transactions.

g. A participant in a covered transaction may rely upon a certification of a prospective participant in a lower tier covered transaction that is not debarred, suspended, ineligible, or voluntarily excluded from the covered transaction, unless it knows that the certification is erroneous. A participant may decide the method and frequency by which it determines the eligibility of its principals. Each participant may, but is not required to, check the Nonprocurement List.

h. Nothing contained in the foregoing shall be construed to require establishment of a system of records in order to render in good faith the certification required by this clause. The knowledge and information of participant is not required to exceed that which is normally possessed by a prudent person in the ordinary course of business dealings.

i. Except for transactions authorized under paragraph e of these instructions, if a participant in a covered transaction knowingly enters into a lower tier covered transaction with a person who is suspended, debarred, ineligible, or voluntarily excluded from participation in this transaction, in addition to other remedies available to the Federal Government, the department or agency with which this transaction originated may pursue available remedies, including suspension and/or debarment.

* * * * *

Certification Regarding Debarment, Suspension, Ineligibility and Voluntary Exclusion--Lower Tier Covered Transactions:

1. The prospective lower tier participant certifies, by submission of this proposal, that neither it nor its principals is presently debarred, suspended, proposed for debarment, declared ineligible, or voluntarily excluded from participation in this transaction by any Federal department or agency.

2. Where the prospective lower tier participant is unable to certify to any of the statements in this certification, such prospective participant shall attach an explanation to this proposal.

* * * * *

XII. CERTIFICATION REGARDING USE OF CONTRACT FUNDS FOR LOBBYING

(Applicable to all Federal-aid construction contracts and to all related subcontracts which exceed $100,000 - 49 CFR 20)

1. The prospective participant certifies, by signing and submitting this bid or proposal, to the best of his or her knowledge and belief, that:

a. No Federal appropriated funds have been paid or will be paid, by or on behalf of the undersigned, to any person for influencing or attempting to influence an officer or employee of any Federal agency, a Member of Congress, an officer or employee of Congress, or an employee of a Member of Congress in connection with the awarding of any Federal contract, the making of any Federal grant, the making of any Federal loan, the entering into of any cooperative agreement, and the extension, continuation, renewal, amendment, or modification of any Federal contract, grant, loan, or cooperative agreement.

b. If any funds other than Federal appropriated funds have been paid or will be paid to any person for influencing or attempting to influence an officer or employee of any Federal agency, a Member of Congress, an officer or employee of Congress, or an employee of a Member of Congress in connection with this Federal contract, grant, loan, or cooperative agreement, the undersigned shall complete and submit Standard Form-LLL, "Disclosure Form to Report Lobbying," in accordance with its instructions.

2. This certification is a material representation of fact upon which reliance was placed when this transaction was made or entered into. Submission of this certification is a prerequisite for making or entering into this transaction imposed by 31 U.S.C. 1352. Any person who fails to file the required certification shall be subject to a civil penalty of not less than $10,000 and not more than $100,000 for each such failure.

3. The prospective participant also agrees by submitting his or her bid or proposal that he or she shall require that the language of this certification be included in all lower tier subcontracts, which exceed $100,000 and that all such recipients shall certify and disclose accordingly.

NOTICE TO CONTRACTORS
CONCERNING THE MBE/DBE GOAL ON THIS CONTRACT

The Maryland Department of Transportation is committed to providing the maximum amount of contracting opportunities to certified Minority Business Enterprises (MBEs) and Disadvantaged Business Enterprises (DBEs). The previously established policy excluded consideration of the cost of supplying structural steel for MBE/DBE participation since there were no structural steel manufacturers certified by MDOT. This exemption is no longer applicable since MBE/ DBE firms have been certified under this category.

The Administration reserves the right to verify the accuracy of the dollar value included on the Contractor's Affirmative Action Plan, including the value associated with the manufacture, supply, and installation of structural steel.

THIS PAGE HAS BEEN INTENTIONALLY LEFT BLANK

AFFIRMATIVE ACTION REQUIREMENTS
UTILIZATION OF DISADVANTAGED BUSINESS ENTERPRISES
FOR FEDERAL-AID CONTRACTS

CONTRACT GOALS

FOR THE PURPOSE OF THIS CONTRACT, A GOAL OF **25 %** PERCENT HAS BEEN ESTABLISHED FOR SOCIALLY AND ECONOMICALLY DISADVANTAGED BUSINESSES THAT ARE OWNED AND CONTROLLED BY – THOSE INDIVIDUALS WHO ARE BLACK AMERICANS, HISPANIC AMERICANS, ASIAN-PACIFIC AMERICANS, SUBCONTINENT ASIAN AMERICANS, NATIVE AMERICANS, OR WOMEN PURSUANT TO THE MARYLAND DEPARTMENT OF TRANSPORTATION (MDOT) MINORITY BUSINESS ENTERPRISE PROGRAM:

It is the policy of the Maryland Department of Transportation that disadvantaged business enterprises as defined in 49 CFR Part 26 and the Safe, Accountable, Flexible, Efficient Transportation Equity Act: A Legacy for Users (SAFETEA-LU) shall have an equal opportunity to participate in the performance of the contracts financed in whole or in part with Federal funds under these agreements. Consequently, the disadvantaged business enterprise requirements of 49 CFR Part 26 and SAFETEA-LU apply to this agreement.

The bidder agrees to ensure that disadvantaged business enterprises as defined in 49 CFR Part 26 and SAFETEA-LU have an equal opportunity to participate in the performance of contracts and subcontracts financed in whole or in part with Federal funds provided under this agreement. In this regard, all bidders shall take all necessary and reasonable steps in accordance with 49 CFR Part 26 and SAFETEA-LU to ensure that disadvantaged business enterprises have an equal opportunity to compete for and perform on Federally funded contracts. The Maryland Department of Transportation and their bidders shall not discriminate on the basis of race, color, national origin, or sex in the award and performance of this Contract.

A. GENERAL

For the purpose of these requirements, the following terms as defined below shall apply:

Administration Representative – A DBE/MBE Officer or employee of an Administration who enforces the laws and regulations pertaining to disadvantaged and minority business enterprise and contract compliance.

Affirmative Actions – Specific steps taken to eliminate discrimination and its effects, to ensure nondiscriminatory results and practices in the future, and to involve disadvantaged and minority business enterprises fully in contracts and programs.

Business Enterprises – Any legal entity which is organized in any form other than as a joint venture (e.g., sole proprietorship, partnership, corporation, etc.) to engage in lawful commercial transactions.

Certified Business – A business which by order of the Chair/MBE Advisory Council or his/hers designee, has been certified as a bona fide DBE/MBE. MDOT certification does not equate to a pre-qualification status.

DBE – Disadvantaged Business Enterprise – Reference 49 CFR, Part 26, Subpart A) a small business concern: (1) which is at least 51 percent owned by one or more socially and economically disadvantaged individuals. Where stock ownership is involved, the disadvantaged owner(s) shall own at least 51 percent of each class of voting stock and at least 51 percent of the aggregate of all classes of stock that have been issued (also applies to publicly owned businesses); and (2) whose management and daily business operations are controlled by one or more of the socially and economically disadvantaged individuals who have ownership. In this specification the terms MBE and DBE have the same meaning.

DBE/MBE Directory – A compilation of businesses certified by MDOT as disadvantaged, minority, or socially and economically disadvantaged businesses. The directory will be published annually with quarterly supplements. It will also be provided in automated format and on the Internet to be updated as changes are made.

DBE/MBE Participation Packet – The documents submitted by the bidder or proposer pursuant to the appropriate special bid provisions. The DBE/MBE Participation Packet consists of the Certified DBE Utilization and Fair Solicitation Affidavit and the DBE Participation Schedule, both of which must be submitted with your bid or initial price proposal. The DBE Participation Packet also includes the following documents, which shall be submitted after bids or proposals are opened: Outreach Efforts Compliance Statement (MDOT-OP-018-2), DBE Subcontractor Project Participation Affidavit (MDOT-OP-019-2), MDOT Joint Venture Disclosure Affidavit (D-EEO-006), and Minority Contractor Unavailability Certificate (OOC46).

DBE/MBE Program – A program developed by MDOT to implement the requirements of Title 14, Subtitle 3 of the State Finance and Procurement Article, Annotated Code of Maryland; Title 10, Subtitle 3 of the State Finance and Procurement Article of the Annotated Code of Maryland for Leases of State-Owned Property; and 49 CFR, Part 26, Subparts A and C for all Federal Department of Transportation Financial Assistance Programs.

Director, Office of Equal Opportunity – The individual designated for the Administration's overall MBE compliance.

Joint Venture – An association of a DBE/MBE firm and one or more other firms to carry out a single, for-profit business enterprise, for which the parties combine their property, capital, efforts, skills, and knowledge, and in which the DBE/MBE is responsible for a distinct, clearly defined portion of the work of the contract and whose share in the capital contribution, control, management, risks, and profits of the joint venture are commensurate with its ownership interest.

Small Business Administration (SBA) 8(a) Certification – The SBA 8(a) Certification Program is a Federal Program which establishes firms as disadvantaged and eligible for participation in the Federal SBA Program.

Socially and Economically Disadvantaged Individual Pursuant to 49 CFR, Part 26 – Those individuals who are citizens of the United States (or lawfully admitted permanent residents). For convenience, these individuals and groups are referred to as "minorities" in this document and who are:

1. Found by the MDOT to be socially and economically disadvantaged on a case-by-case basis;

2. Any individual in the following groups, members of which are rebuttably presumed to be socially and economically disadvantaged.

   a. "Black Americans," which includes persons having origins in any of the Black racial groups of Africa;

   b. "Hispanic Americans," which includes persons of Mexican, Puerto Rican, Cuban, Dominican, Central or South American, or other Spanish or Portuguese culture or origin, regardless of race;

   c. "Native Americans," which includes persons who are American Indian, Eskimos, Aleuts, or Native Hawaiians;

   d. "Asian-Pacific Americans," which included persons whose origins are from Japan, China, Taiwan, Korea, Burma (Myanmar), Vietnam, Laos, Cambodia (Kampuchea), Thailand, Malaysia, Indonesia, the Philippines, Brunei, Samoa, Guam, the U.S. Trust Territories of the Pacific Islands (Republic of Palau), the Commonwealth of the Northern Marianas Islands, Macao, Fiji, Tonga, Kirbati, Juvalu, Nauru, Federated States of Micronesia, or Hong Kong;

   e. "Subcontinent Asian American," which includes persons whose origins are from India, Pakistan, Bangladesh, Bhutan, the Maldives Islands, Nepal or Sri Lanka;

   f. Women;

3. Only those persons whose personal net worth does not exceed $750,000 may be found to be economically disadvantaged.

B. DBE/MBE and Good Faith Effort Requirements

1. This contract includes a DBE participation goal for subcontracting and/or procurement of materials and/or services. Bidders (or offerors) must make a good faith effort to meet the DBE participation goal **before bids or proposals are due**, including outreach efforts. A bid or initial proposal must include both a completed and executed Certified DBE Utilization and Fair Solicitation Affidavit and DBE Participation Schedule. The failure of a bidder to complete and submit these documents shall result in a determination that the bid is not responsive. The failure of an offeror to complete and submit these documents shall result in a determination that the proposal is not susceptible of being selected for award.

2. In making a good faith effort to achieve the DBE goal, prior to completing the Certified DBE Utilization and Fair Solicitation Affidavit and the DBE Participation Schedule and prior to submitting a bid or initial proposal the bidders (or offerors) including those bidders or offerors that are certified DBEs must:

   a. Identify specific work categories within the scope of the procurement appropriate for subcontracting and/or procurement of materials and/or services;

   b. **Solicit DBEs in writing at least 10 days before bids or initial proposals are due,** describing the identified work categories and providing instructions on how to bid on the subcontracts and/or procurement of materials and/or services;

c. Attempt to make personal contact with the DBEs solicited and to document these attempts;

d. Assist DBEs to fulfill, or to seek waiver of, bonding requirements; and

e. Attend prebid or other meetings the procurement agency schedules to publicize contracting opportunities to DBEs.

3. All firms bidding on a Federal-Aid Contract shall submit the name and address of all subcontractors, service providers and suppliers that submitted quotes on the Contract. All subcontractors, service providers and suppliers shall complete and submit the form entitled Contractor Information, to the Administration.

4. The bidder shall seek commitments from disadvantaged business enterprises by subcontracting and/or procurement of materials and/or services, the combined value of which equals or exceeds the appropriate percent (goal) of the total value of the prime contract. A bidder may count toward its DBE goals expenditures for materials and supplies obtained from DBE regular dealers and/or manufacturers provided that the DBEs assume the actual and contractual responsibility for the provision of the materials and supplies. The bidder may count its entire expenditure to a DBE manufacturer (i.e., a supplier that produces goods from raw materials or substantially alters them before resale). The bidder may count sixty (60) percent of its expenditures to a DBE regular dealer that is not a manufacturer, provided that the DBE supplier performs a commercially useful function in the supply process. The apparent low bidder shall submit to the Administration, within ten (10) business days after notification that it is the apparent low bidder, an acceptable Affirmative Action Plan for the utilization of Disadvantaged Business Enterprises in this Contract. The Contract will not be awarded without the Bidder's AAP being approved by the Administration.

   The Affirmative Action Plan shall include as a minimum:

   a. The name of an employee designated as the bidder's liaison officer for minority affairs.

   b. A complete DBE Subcontractor Project Participation Affidavit (MDOT-OP-019-2), using contractors whose names appear in the DBE/MBE directory or who are otherwise certified by MDOT as being a disadvantaged business enterprise. Except as permitted by law and approved by the Administration, this affidavit shall include all DBE firms identified on the DBE Participation Schedule with a percentage of participation that meets or exceeds the percentage of participation indicated in the bid or initial proposal.

   c. A completed Outreach Efforts Compliance Statement (MDOT-OP 018-2).

5. When a bidder intends to attain the appropriate goal for disadvantaged business enterprise participation by use of a joint venture, the bidder shall submit a Joint Venture Disclosure Affidavit (Form D-EEO-006-A) showing the extent of disadvantaged business participation. If a bidder intends to use a joint venture as a subcontractor to meet its goal, the affidavit shall be submitted through the bidder by the proposed subcontractor and be signed by all parties. A DBE, even in a joint venture arrangement shall be certified as a DBE by MDOT prior to being included in the Affirmative Action Plan.

6. Where the proposed DBE participation does not meet the DBE contract goals, sufficient evidence to demonstrate that the bidder has taken all necessary and reasonable steps to make a good faith effort to meet these goals shall be required.

7. **Determination of Bid Responsiveness for Federal-Aid Contracts**

   If the bidder is unable to secure from DBEs by subcontracting and/or by procurement of materials and/or services, commitments which at least equal the appropriate percent (goal) of the values of the prime Contract at the time of bid, he shall request, in writing, a waiver of the unmet portion of the goal. This request must be initiated by checking the appropriate box on the Certified DBE Utilization and Fair Solicitation Affidavit submitted with the bid or initial proposal.

   The waiver may be granted by the Administrator. To obtain approval of a waiver, the bidder shall submit the following information:

   a. A detailed statement of efforts made prior to bid to contact and negotiate with DBEs including: (i) the dates, names, addresses, and telephone numbers of DBEs who were contacted; (ii) a description of the information provided to DBEs requesting the plans, specifications, and anticipated time schedule for portions of the work to be performed and (iii) a detailed statement of the reasons why additional prospective agreements with DBEs were not reached;

   b. A detailed statement of the efforts made to select portions of the work proposed to be performed by DBEs in order to increase the likelihood of achieving the stated goals;

   c. For each DBE that the Contractor considers not qualified, but from which a bid has been received, a detailed statement of the reasons for the bidder's conclusion; and

   d. For each DBE contacted but unavailable, (i) a Minority Contractor Unavailability Certificate (Form OOC46) signed by the disadvantaged business enterprise, or (ii) a statement from the bidder shall be submitted that states that the DBE refused to sign the Certificate.

8. **Guidance concerning good faith efforts.** The following is a list of the types of actions and factors that will be used to determine the bidder's or offeror's good faith efforts to obtain DBE participation. It is not intended to be a mandatory checklist, nor is it intended to be exclusive or exhaustive. Other factors or types of efforts may be relevant in appropriate cases.

   (1) Soliciting through all reasonable and available means (e.g. attendance at pre-bid meetings, advertising and/or written notices) the interest of certified DBEs who have the capability to perform the work of the contract. The bidder must solicit this interest within sufficient time to allow the DBEs to respond to the solicitation. The bidder must determine with certainty if the DBEs are interested by taking appropriate steps to follow up initial solicitations.

(2) Selecting portions of the work to be performed by DBEs in order to increase the likelihood that the DBE goals will be achieved. This includes, where appropriate, breaking out contract work items into economically feasible units to facilitate DBE participation, even when the bidder or offeror might otherwise prefer to perform these work items with its own forces.

(3) Providing interested DBEs with adequate information about the plans, specifications, and requirements of the contract in a timely manner to assist them in responding to a solicitation.

(4) **(a)** Negotiating in good faith with interested DBEs. It is the bidder's or offeror's responsibility to make a portion of the work available to DBE subcontractors and suppliers and to select those portions of the work or material needs consistent with the available DBE subcontractors and suppliers, so as to facilitate DBE participation.

(b) A bidder using good business judgment would consider a number of factors in negotiating with subcontractors, including DBE subcontractors, and would take a firm's price and capabilities as well as contract goals into consideration. However, the fact that there may be some additional costs involved in finding and using DBEs is not in itself sufficient reason for a bidder's failure to meet the contract DBE goal, as long as such costs are reasonable. Also, the ability or desire of a prime contractor to perform the work of a contract with its own organization does not relieve the bidder of the responsibility to make good faith efforts. Bidders and offerors are not, however, required to accept higher quotes from DBEs if the price difference is excessive or unreasonable.

(5) Not rejecting DBEs as being unqualified without sound reasons based on a thorough investigation of their capabilities. The contractor's standing within its industry, membership in specific groups, organizations, or associations and political or social affiliations (for example union vs. non-union employee status) are not legitimate causes for the rejection or non-solicitation of bids in the contractor's efforts to meet the project goal.

(6) Making efforts to assist interested DBEs in obtaining bonding, lines of credit, or insurance as required by the recipient or contractor.

(7) Making efforts to assist interested DBEs in obtaining necessary equipment, supplies, materials, or related assistance or services.

(8) Effectively using the services of available minority/women community organizations; minority/women contractors' groups; local, state, and Federal minority/women business assistance offices; and other organizations as allowed on a case-by-case basis to provide assistance in the recruitment and placement of DBEs.

(9) In determining whether a bidder or offeror has made good faith efforts, you may take into account the performance of other bidders or offerors in meeting the contract goal. For example, when the apparent successful bidder or offeror fails to meet the contract goal, but others meet it, the Administration may reasonably raise the question of whether, with additional reasonable efforts, the apparent successful bidder or offeror could have met the goal. If the apparent successful bidder or offeror fails to meet the goal, but meets or exceeds the average DBE participation obtained by other bidders or offerors, the Administration may view this, in conjunction with other factors, as evidence of the apparent successful bidder or offeror having made good faith efforts.

9. Bidder Use of DBE Special Services

The bidder shall consider, whenever possible, utilizing the services of minority-owned banks. Most minority banks are full-service corporations that can provide an array of financial services such as Treasury and Tax Loan fund accounts, time and demand deposit accounts, payroll services, and if needed, organization investment counseling.

10. Bidder Records

The bidder shall maintain records showing actions which have been taken to comply with procedures set forth herein.

11. Bidder Cooperation

The bidder shall cooperate with the Administration Representative in any reviews of the Contractor's procedures and practices with respect to DBEs which the Administration Representative may from time to time conduct.

12. Bidder DBE Modifications

During the life of the Contract, all plans to modify the approved DBE participation program will require the approval of the Administrator or his authorized representative. This shall include any changes to the items of work to be sublet or materials and services to be obtained which differ for those in the original DBE participation program. Any such request for revisions shall be directed to the appropriate District Engineer for their disposition.

C. RECORDS AND REPORTS

1. The Contractor shall keep such records as are necessary to determine compliance with its Minority Business Enterprise utilization obligations. The records kept by the Contractor shall be designed to indicate:

   a. The name of disadvantaged and non-disadvantaged subcontractors and suppliers, the type of work materials or services being performed on or incorporated in this project, and the monetary value of such work materials or services.

   b. Documentation of all correspondence, contacts, telephone calls, etc., to obtain the services of disadvantaged business enterprises on this project.

   c. The progress and efforts made in seeking out disadvantaged contractor organizations and individual disadvantaged contractors for work on this project.

2. Information required to be submitted for Federally Assisted contracts in accordance with 49 CFR Part 26:

a. All bidders (not only the apparent successful bidder) shall provide the following information:

(1) The age of the bidding firm; and

(2) The annual gross receipts of the bidding firm.

b. All bidders (not only the apparent successful bidder) shall provide the following information for each firm quoting or considered as subcontractors:

(1) The name of firm; and

(2) The address of firm.

c. The Administration will contact each of the firms quoting or considered as subcontractors to obtain:

(1) The age of the firm; and

(2) The annual gross receipts of the firm

If this information already has been gathered by the Administration on a firm and it is current, it will not be requested.

3. The Contractor shall submit reports on a quarterly basis of those contracts and other business transactions executed with disadvantaged business enterprises with respect to the records referred to in Subparagraph 1.a above, in such form, manner, and content as prescribed by the Administration. The quarterly reports shall be due on the 15th calendar day of January, April, July, and October. If the Contractor cannot submit their report on time, they shall notify the Administration's Representative and request additional time to submit the report. Failure of the Contractor to report in a timely manner may result in a finding of noncompliance. Additional reports may be required by the Administration upon written request.

4. To ensure compliance with the certified DBE contract participation goals, the Contractor shall:

a. Submit monthly, a report listing unpaid invoices, over 30 days, from all certified DBE subcontractors and the reason payment has not been made;

b. Include in its agreement with certified DBE subcontractors a requirement that the DBE subcontractors are to submit monthly to the Administration, a report identifying the prime Contractor and listing the following:

1. Payment received from the Contractor in the preceding 30 days; and

2. Invoices for which the subcontractor has not been paid.

5. All such records shall be retained for a period of three years following acceptance of final payment and shall be available for inspection by the U.S. Department of Transportation, the Maryland Department of Transportation, and the Administration.

D. ADMINISTRATIVE PROCEDURES FOR ENFORCEMENT

1. Whenever the Administration believes the prime Contractor or any subcontractor may not be operating in compliance with the terms of these provisions, the Administration Representative will conduct an investigation. If the Administration Representative finds the prime Contractor or any subcontractor not in compliance with these provisions, he will make a report of non-compliance and notify such Contractor in writing of the steps that will, in the judgment of the Administration, bring the Contractor into compliance. If the Contractor fails or refuses to comply fully with such steps, the Administration Representative will make a final report of noncompliance to the Administrator, who may direct the imposition of one or more of the sanctions listed below:

   a. Suspension of work on a project, pending correction;

   b. Withholding payment or a percentage thereof, pending correction;

   c. Referral of DBE/MBE to MDOT Office of MBE for review for decertification or minority business fraud investigation;

   d. Referral to MDOT Office of MBE for review/referral to the Attorney General's Office for review for initiation of debarment;

   e. Referral to the Attorney General's Office for review for debarment or for criminal prosecution through the MDOT Office of General Counsel; or

   f. Any other action as appropriate.

   The Administrator will determine which sanction(s) should be imposed in order to promote the purpose of the MDOT DBE/MBE Program.

2. If the documents used to determine the status of a DBE contain false, misleading, or misrepresenting information, the matter may be referred to the MDOT Office of MBE for appropriate action.

3. Loss of DBE Certification

   a. When a prime Contractor has made a commitment to use a DBE who has lost its certification but the subcontract has not been executed prior to the notice of loss of certification, the prime Contractor is required to obtain an eligible, certified DBE for the contract or demonstrate to MDOT that it has made a good faith effort to do so.

   b. When a prime Contractor has executed a contract with a DBE subcontractor before the notice of loss of certification, the prime Contractor may continue to use the firm on the contract and may continue to receive credit towards its DBE goal, i.e., contract goal, for the work of that subcontractor.

   c. The work carried out by a DBE Prime Contractor would be counted by MDOT up to the loss of certification. The work performed after the loss of certification would not be considered DBE participation.

d. When a DBE subcontractor has lost its certification, MDOT may not continue to count the DBE participation which takes place after the loss of certification as DBE work when counting participation towards the overall goal of the modal administration or the Department.

e. If a DBEs loss of certification is the result of exceeding the size standards while performing on a contract, the DBE participation may be counted for both the contract goal and the overall goal.

E. SUBCONTRACTING.

Subcontracting by the Prime Contractor. Form B Request for Approval of Subcontractor shall be used by the Prime Contractor to request approval of a Subcontractor and also to ensure that a formal Subcontract has been or will be written and kept on file by the Prime Contractor. Completion and submittal of the form by the Prime Contractor acknowledges that the Administration's Contracting Officer may require the submission of the written Subcontract for review by the Administration and/or FHWA.

Lower Tier Subcontracting by an Approved Subcontractor. Form B Subcontractor's Request for Approval of Lower Tier Subcontractor shall be used by an Approved Subcontractor to request approval of a Lower Tier Subcontractor and also to ensure that a formal Subcontract has been or will be written and kept on file by the Subcontractor. Completion and submittal of the form by the Subcontractor acknowledges that the Administration's Contracting Officer may require the submission of the written Subcontract for review by the Administration and/or FHWA.

Form Acquisitions. Maryland State Highway Administration Form B may be acquired through the Administration's Contracts Award Team or District Office. All questions should be directed to the Office of Construction, Contracts Award Team.

It is the Administration's intention to randomly select during each calendar quarter a representative sample of written Subcontracts for review. This review will be conducted by the Office of Construction's Contracts Award Team.

MBE/DBE COMPLIANCE FIELD MEETING

A MBE/DBE compliance Field Meeting will be conducted to review the responsibilities of the Administration and the Contractor's personnel relative to MBE/DBE Compliance and documentation. The meeting will be held within two weeks after starting work on the project.

The Construction Project Engineer, who will notify the following of the date, time and location, will arrange the meeting. At least one week advanced notice will be required.

(a) City Representatives.

(1) Director, Office of Equal Opportunity or Designee

(2) Equal Opportunity Officer

(3) Regional Constructional Engineer

(4) Construction Project Engineer

(5) Construction Inspection Division Inspector

(b) Contract Representatives.

(1) Superintendent - Prime Contractor

(2) Equal Opportunity Officer - Prime Contractor

(3) Owner/Superintendent/Foreman MBE/ DBE - Subcontractor

The Construction Project Engineer and Equal Opportunity Representative will jointly conduct the meeting. The Contractor shall notify the appropriate subcontractors and ensure their attendance.

TRAFFIC CONTROL PLAN CERTIFICATION

PRIOR TO THE COMMENCEMENT OF WORK ON THIS PROJECT, THE SUCCESSFUL BIDDER WILL BE REQUIRED TO COMPLETE A TRAFFIC CONTROL PLAN CERTIFICATION, CONTAINING THE INFORMATION SHOWN BELOW. THE CERTIFICATION FORM WILL BE PROVIDED TO THE SUCCESSFUL BIDDER UPON AWARD OF THE CONTRACT.

The City's Traffic Control Plan (TCP) has been reviewed and the following course of action shall be followed:

Option 1_____
The TCP is accepted and shall be used on this project.

Option 2_____
The TCP is accepted; however, revisions and/or additions shall be submitted for approval in conformance with the Administration's Specifications 104.01.

Option 3_____
The TCP is not accepted and revision shall be submitted for approval in accordance with the Administration's Specifications 104.01.

It is understood that the effective implementation of the approved TCP is the responsibility of the Contractor. Minor modifications may be made by the Traffic Manager if field conditions warrant and prior concurrence is obtained from the Engineer. Significant changes to the TCP will be submitted to the Engineer in writing, for approval, in conformance with the City's Specifications.

_____
(DATE)

_____
(SIGNATURE)

_____
(PRINT SIGNATURE)

_____
(TITLE)

PREVAILING WAGE INSTRUCTIONS FOR THE CONTRACTOR

PAYROLLS.

Non-Federally Funded Contracts. For Non-Federally funded projects, which include prevailing wage rates, the prime Contractor and each subcontractor shall submit two copies of their payroll records. One copy shall be submitted to the Project Engineer and one shall be sent to the Maryland State Commissioner of Labor & Industry, Room 607, 1100 N. Eutaw Street, Baltimore, MD 21201, where they will be available for inspection during business hours. All wages shall be paid in conformance with the State Finance and Procurement Article, Section 17-201-17-226 of the Annotated Code of Maryland and the Fair Labor Standards Amendments of 1974 (P.L. 93259). If the award amount of a Non-Federally funded job is less than $500,000, the project will be exempt from prevailing wage requirements.

A review has been made of the wage conditions in the locality and, based on the information available, the wage rates and fringe payments listed are determined by the Commissioner of the Department of Labor and Industry to be prevailing for the Contract for the described classes of labor in conformance with the law. It shall be the responsibility of the Contractor to fully comply with the law and to contact the Office of the Commissioner of Labor and Industry for interpretation of the provisions of the law.

Federally Funded Contracts. For Federally funded projects, the prime Contractor and each subcontractor shall submit one copy of the certified payroll to the Project Engineer.

General Requirements for Federally and Non-Federally Funded Contracts. All payrolls are subject to the following requirements:

(a) All payrolls shall be numbered, beginning at No. 1, and consecutively numbered through the end of the Contract.

(b) Contract and FAP numbers shall be shown on all payrolls (as applicable).

(c) All payroll submissions shall include the employees' full name, classification, and a unique employee identification number.

NOTE: Employees' address and social security number are no longer required. Update revisions to FHWA 1273 and US DOL Form WH-347 are pending.

(d) All payrolls shall show the employee's basic hourly wage rate, overtime rate (if applicable), and the number of hours worked (tabulated both daily and weekly).

(e) When fringe benefits are required, indicate separately the amount of employer contributions to fringe benefit funds and/or programs. The fringe benefits shall be individually identified, but may be tabulated on a separate sheet. When required fringe benefits are paid in cash, add the required fringe benefit amount to the basic hourly rate to obtain the total prevailing wage rate for the employee.

(f) The employee's net pay and the itemized deductions shall be included in all payrolls.

(g) A Contractor may make deductions that are required by law or required by a collective bargaining agreement (between the Contractor and a bona fide labor organization). Deductions are also permitted if they are identified in a written agreement between the employee and employer that was made at the beginning of employment, provided that the Contractor presents the agreement to the Administration before the employee begins working on the Contract. Each payroll shall also include the U.S. Department of Labor and Hour Public Contracts Division Statement of Compliance Form WH-347 (or its equivalent), signed by an appropriate official of the Contractor/subcontractor. The Contractor's name, address, and telephone number shall also to be shown.

(h) On Non-Federally funded projects, all apprentices shall be registered with the Maryland Apprenticeship and Training Council.

(i) Contractors employing a classification of worker for which a wage rate was not included on the original wage decision, shall submit to the Wage and Hour Team, a request for an additional classification and rate prior to the employee's employment at the project.

(j) Payrolls for Non-Federally Funded projects shall be submitted within 14 calendar days after the end of each payroll period.

(k) Payrolls for Federally Funded projects shall be submitted within 7 calendar days after the end of each payroll period.

(l) Payroll submissions shall no longer contain an employee's home address or complete social security number. Contractors and Subcontractors are required to maintain complete social security numbers and home addresses for employees. Government agencies are entitled to request or review all relevant payroll information, including social security numbers and addresses of employees. Contractors and Subcontractors are required to provide such information upon request.

OVERTIME.

Non-Federally Funded Contracts. Overtime rates shall be paid by the prime Contractors and subcontractors under their Contracts and agreements with their employees, which in no event shall be less than time and a half the prevailing hourly rate of wages for all hours worked in

excess of ten hours in any one calendar day or forty hours in any one calendar week and work performed on Sundays and legal holidays.
Fringe benefits shall be paid for all hours worked, including the overtime hours. However, the fringe benefit amounts may be excluded from the half time premium due as overtime compensation.

Federally Funded Contracts. Overtime rates shall be paid as specified in Form FHWA 1273. Fringe benefits shall be paid for all hours worked, including the overtime hours. However, the fringe benefit amounts may be excluded from the half time premium due as overtime compensation.

PENALTIES.

Non-Federally Funded Contracts. When the Contractor is delinquent in submitting payroll records, processing of partial payment estimates will be held in abeyance, pending receipt of the records. The Contractor shall be liable to the Administration for liquidated damages in the amount of $10.00 for each calendar day the records are late.

The Contractor shall be liable to the Administration for liquidated damages in the amount of $20.00 for each day that an employee is paid less than the prevailing wage.

Federally Funded Contracts. When the Contractor is delinquent in submitting payroll records, processing of partial payment estimates will be held in abeyance pending receipt of the records.

ADDITIONAL CLASSIFICATIONS.

If the wage determination lacks a necessary classification the Prime Contractor is responsible to submit the request for the additional classification, with a proposed rate, to the State Highway Administration's Wage and Hour Team. The request is to include a copy of the projects wage determination.

INQUIRIES.

Requests for information or questions shall be addressed to:

Wage Commission
10 N. Calvert Street, Room 915
Baltimore, MD 21202
Telephone: 410-396-4835

or

Baltimore Department of Transportation
Transportation Engineering and Construction Division

Wage and Hour Team
417 E. Fayette Street
Baltimore, MD 21202
Telephone: 410-396-6930
Fax: 410-547-8276

NOTICE TO BIDDERS

Schedules for Minimum Hourly Wages

The Bidder is hereby notified that all minimum hourly wage rates of the Mayor and City Council of Baltimore (Classification No. **2**) and the United States Department of Labor Wage Determinations shall be in force on all Federally funded projects. However, if there is a conflict between the City and Federal wages, the highest wage rate shall prevail.

F.A.P. NO. STP-3057(4)N
SHA CONTRACT NO. BC320-001-815
BALTIMORE CITY CONTRACT NO. TR08310

CLASSIFICATION NO. 2

The following minimum hourly wage rates shall apply on all construction contracts in excess of Five Thousand Dollars ($5,000) when such contracts involve work on highways and streets; and said work includes paving, repaving, construction and complete reconstruction. This classification also applies to repair, renovation or construction and reconstruction of viaducts and bridges predominately over land.

JOURNEYMEN	HOURLY RATE	FRINGE BENEFITS	TOTAL
Bricklayers	$ 15.95	$ 3.40	$ 19.35
Carpenters/Piledriver	21.20	6.40	27.60
Concrete Masons (Finisher)	21.90	6.35	28.25
Electricians	18.20	4.725	22.925
Ironworkers			
Structural & Reinforcing	26.38	16.44	42.82
Fence Erectors	26.13	16.44	42.57
Laborer			
General Laborer: Flagman, Dumpmen, Spotters, Landscapers, Mulchers, Chain/Rodman	13.21	5.38	18.59
Construction Laborers: All Laborers Not Otherwise Classified	16.13	5.38	21.51
Semi-Skilled Laborers: Form Setter	16.51	5.38	21.89
Skilled Laborer: Concrete Surfacer	17.12	5.38	22.50
Painters			
Spray, Structural Steel, Steam Cleaning and Sandblasting	31.32	8.11	39.43
POWER EQUIPMENT OPERATORS			
GROUP IA: Cranes, gradalls, graders, long and ultra high reach excavators, excavators (over 120,000 lbs).	28.45	11.55	40.00
GROUP I: Excavators (other than 120,000 lbs. and mini excavators), boom trucks, challenger type equipment, bull dozers (regardless of sizes), batch plants, John Deere and case type loader backhoes (regardless of size), front end loaders (1 ¼ yards and over), batch plants, concrete mixing plants, concrete pavers, curb and gutter machines, concrete pumps, drill rigs, hoists, standard gauge locomotive, sub-grader, trenching machine, scrapers (regardless of size), tunnel mucking machines, compactor with attachments, milling machines, repair mechanics and welders.	25.95	11.55	37.50

APPROVED BY BOARD OF ESTIMATES

Bernice H. Taylor

Clerk to the Board of Estimates

FEB 16 2011

Date

F.A.P. NO. STP-3057(4)N
SHA CONTRACT NO. BC320-001-815
BALTIMORE CITY CONTRACT NO. TR08310

JOURNEYMEN	HOURLY RATE	FRINGE BENEFITS	TOTAL
GROUP II: Fuel/grease truck, power roller, mini-excavators, skid steer (with attachments), asphalt spreader, guard rail post pounder, concrete mixer (with slip), concrete spreader, ditch witch type trencher, narrow gauge locomotive, stone crusher, stone spreader, trucks (on and off road), snooper truck, bull float, power sweepers, front end loaders (1 yard and under), and articulating trucks.	$ 24.95	$11.55	$ 36.50
GROUP III: Compressors, conveyors, firemen, grout pump, high-lift, fork lifts, light plants, Mighty Midget with compressor, space heaters, welding machines, well-drill, well-point systems, and all oilers.	21.99	11.55	33.54
Truck Drivers			
Dump Truck (Site Only)	14.44	4.60	19.04
Welder	Receives Rate For Craft Involved.		

APPRENTICESHIP RATES
PERCENTAGE OF JOURNEYMAN'S HOURLY RATE
PLUS FULL JOURNEYMAN'S FRINGE BENEFITS

CARPENTERS

First year	50
Second year	60
Third year	70
Fourth year	85

APPROVED BY BOARD OF ESTIMATES

Bernice H. Taylor DEC 0 8 2010

Clerk to the Board of Estimates

F.A.P. NO. STP-3057(4)N
SHA CONTRACT NO. BC320-001-815
BALTIMORE CITY CONTRACT NO. TR08310

CEMENT FINISHERS

First 500 hours	50
Second 500 hours	55
Third 500 hours	60
Fourth 500 hours	65
Fifth 500 hours	70
Sixth 500 hours	75
Seventh 500 hours	80
Eighth 500 hours	90

ELECTRICIANS

First 6 months	35
Second 6 months	40
Second year	45
Third year	55
Fourth year	65
Fifth year	75

IRONWORKERS

First 1,000 hours	50
Second 1,000 hours	55
Third 1,000 hours	60
Fourth 1,000 hours	70
Fifth 1,000 hours	80
Sixth 1,000 hours	90

PAINTERS

First 1,000 hours	60
Second 1,000 hours	65
Third 1,000 hours	70
Fourth 1,000 hours	75
Fifth 1,000 hours	80
Sixth 1,000 hours	85

POWER EQUIPMENT OPERATORS

First period	65
Second period	75
Third period	80

APPROVED BY BOARD OF ESTIMATES

Bernice H. Taylor DEC 08 2010

Clerk to the Board of Estimates

LABORER'S WORK

Laborers may not assist mechanics in the performance of mechanics' work, nor use tools peculiar to established trades. Their work should be confined to the following manual tasks:

1. Digging and filling holes and trenches.
2. Loading, unloading and stockpiling materials.
3. Cleaning and sweeping.
4. Driving stakes.
5. Placing concrete and asphalt.
6. Stripping forms.
7. Ripping out material which is to be discarded.
8. Clearing and grubbing.

The above definition is to preclude inadvertent misclassification of laborers.

APPROVED BY BOARD OF ESTIMATES

Bernice M. Taylor DEC 08 2010

Clerk to the Board of Estimates

GENERAL DECISION: MD20100061 07/30/2010 MD61

Date: July 30, 2010
General Decision Number: MD20100061 07/30/2010

Superseded General Decision Number: MD20080061

State: Maryland

Construction Type: Highway

County: Baltimore County in Maryland.

HIGHWAY CONSTRUCTION PROJECTS (excluding tunnels, building structures in rest area projects & railroad construction; bascule, suspension & spandrel arch bridges designed for commercial navigation, bridges involving marine construction; and other major bridges).

Modification Number	Publication Date
0	03/12/2010
1	07/30/2010

* SUMD2010-004 01/28/2010

	Rates	Fringes
BRICKLAYER	$ 26.20	7.43
CARPENTER	$ 21.67	6.02
CEMENT MASON/CONCRETE FINISHER	$ 18.00	
IRONWORKER		
Fence Erector	$ 24.80	13.16
Reinforcing	$ 26.73	14.29
LABORER		
Air Tool Operator	$ 19.25	3.04
Asphalt Paver	$ 16.68	4.43
Burner	$ 16.42	4.43
Common/Unskilled	$ 15.79	4.07
Flagger	$ 14.21	3.48
Mason Tender	$ 15.38	3.99
Pipelayer	$ 16.86	4.82
PAINTER		
Painter	$ 30.32	8.21
Steel Bridge	$ 30.32	7.91
POWER EQUIPMENT OPERATOR:		
Bobcat	$ 22.20	11.05+a
Bulldozer	$ 23.10	10.40
Crane	$ 26.60	11.05+a
Excavator	$ 23.40	11.05+a
Forklift	$ 16.78	3.99

Gradall	$ 24.10	11.05+a
Grader	$ 23.35	10.89+a
Loader	$ 23.10	10.40+a
Master Mechanic	$ 26.10	10.40
Milling Machine	$ 23.10	11.05+a
Oiler	$ 19.60	
Paver	$ 22.20	11.05
Piledriver	$ 23.87	7.83
Roller, Asphalt	$ 22.20	10.40
Roller, Earth	$ 22.20	10.40+a
Scraper	$ 20.35	9.00+a
Screed	$ 18.75	9.23
Sweeper	$ 22.20	11.05+a
TRUCK DRIVER		
Dump	$ 17.15	2.59
Lowboy	$ 24.00	10.40
Tractor Trailer	$ 24.75	11.05

FOOTNOTE:
a. PAID HOLIDAYS: New Year's Day, Memorial Day, Independence Day, Labor Day, Thanksgiving Day & Christmas Day.

WELDERS - Receive rate prescribed for craft performing operation to which welding is incidental.

==========

Unlisted classifications needed for work not included within the scope of the classifications listed may be added after award only as provided in the labor standards contract clauses (29 CFR 5.5(a)(1)(ii)).

In the listing above, the "SU" designation means that rates listed under the identifier do not reflect collectively bargained wage and fringe benefit rates. Other designations indicate unions whose rates have been determined to be prevailing.

WAGE DETERMINATION APPEALS PROCESS

1.) Has there been an initial decision in the matter? This can be:

* an existing published wage determination
* a survey underlying a wage determination
* a Wage and Hour Division letter setting forth a position on a wage determination matter
* a conformance (additional classification and rate) ruling on survey related matters, initial contact, including requests for summaries of surveys, should be with the Wage and Hour Regional Office for the area

in which the survey was conducted because those Regional Offices have responsibility for the Davis-Bacon survey program. If the response from this initial contact is not satisfactory, then the process described in 2.) and 3.) should be followed.

With regard to any other matter not yet ripe for the formal process described here, initial contact should be with the Branch of Construction Wage Determinations. Write to:

Branch of Construction Wage Determinations
Wage and Hour Division
U.S. Department of Labor
200 Constitution Avenue, N.W.
Washington, DC 20210

2.) If the answer to the question in 1.) is yes, then an interested party (those affected by the action) can request review and reconsideration from the Wage and Hour Administrator (See 29 CFR Part 1.8 and 29 CFR Part 7). Write to:

Wage and Hour Administrator
U.S. Department of Labor
200 Constitution Avenue, N.W.
Washington, DC 20210

The request should be accompanied by a full statement of the interested party's position and by any information (wage payment data, project description, area practice material, etc.) that the requestor considers relevant to the issue.

3.) If the decision of the Administrator is not favorable, an interested party may appeal directly to the Administrative Review Board (formerly the Wage Appeals Board). Write to:

Administrative Review Board
U.S. Department of Labor
200 Constitution Avenue, N.W.
Washington, DC 20210

4.) All decisions by the Administrative Review Board are final.

END OF GENERAL DECISION

NOTICE OF ACTIONS REQUIRED FOR AFFIRMATIVE ACTION TO ENSURE EQUAL EMPLOYMENT OPPORTUNITY (EXECUTIVE ORDER 11246)

1. The Offeror's or Bidders attention is called to the "Equal Opportunity Clause" and the "Standard Federal Equal Employment Specifications" set forth herein.

2. The goals and timetables for minority and female participation, expressed in percentage terms for the Contractor's aggregate work force in each trade on all construction work in the covered area, are as noted in Appendix A and B:

   These goals are applicable to all the Contractors' construction work (whether or not it is Federal or federally assisted) performed in the covered area. If the contractor performs construction work in a geographical area located outside of the covered area, it shall apply the goals established for such geographical area where the work is actually performed. With regard to this second area, the contractor also is subject to the goals for both its federally involved and nonfederally involved construction.

   The contractor's compliance with the Executive Order and the regulations in 41 CFR Part 60-4 shall be based on its implementation of the Equal Opportunity Clause, specific affirmative action obligations required by the specifications set forth in 41 CFR 60-4.3(a), and its efforts to meet the goals. The hours of minority and female employment and training must be substantially uniform throughout the length of contract, and in each trade, and the contractor shall make a good faith effort to employ minorities and women evenly on each of its projects. The transfer of minority or female employees or trainees from Contractor to Contractor or from project to project for the sole purpose of meeting the contractor's goals shall be a violation of the contract, the Executive Order and the regulations in 41 CFR Part 60-4. Compliance with the goals will be measured against the total work hours performed.

3. The Contractor shall provide written notification to the Director of the Office of Federal Contract Compliance Programs within 10 working days of award of any construction subcontract in excess of $10,000 at any tier for construction work under the contract resulting from this notification. The notification shall list the name, address, and telephone number of the subcontractor; employer identification number of the subcontractor; estimated dollar amount of the subcontract; estimated starting and completion dates of the subcontract; and the geographical area in which the subcontract is to be performed.

4. As used in this Notice, and in the contract resulting from this solicitation, the "covered area" is noted in Appendix B.

STANDARD FEDERAL EQUAL EMPLOYMENT OPPORTUNITY CONSTRUCTION CONTRACT SPECIFICATIONS (Executive Order 11246)

1. As used in these specifications:

   a. "Covered area" means the geographical area described in the solicitation from which this contract resulted;

   b. "Director" means Director, Office of Federal Contract Compliance Programs, United States Department of Labor, or any person to whom the Director delegates authority;

c. "Employer identification number" means the Federal Social Security number used on the Employer's Quarterly Federal Tax Return, U.S. Treasury Department Form 941.

d. "Minority" includes:

(i) Black (all persons having origins in any of the Black African racial groups not of Hispanic origin);

(ii) Hispanic (all persons of Mexican, Puerto Rican, Cuban, Central or South American or other Spanish culture or origin regardless of race);

(iii) Asian and Pacific Islander (all persons having origins in any of the original people of the Far East, Southeast Asia, the Indian Subcontinent, or the Pacific Islands); and,

(iv) American Indians or Alaskan Native (all persons having origins in any of the original peoples of North America and maintaining identifiable tribal affiliations through membership and participation or community identification).

2. Whenever the Contractor, or any Subcontractor at any tier, subcontracts a portion of the work involving any construction trade, it shall physically include in each subcontract in excess of $10,000 the provisions of these specifications and the Notice which contains the applicable goals for minority and female participation and which is set forth in the solicitations from which this contract resulted.

3. If the Contractor is participating (pursuant to 41 CFR 60-4.5) in a Hometown Plan approved by the U.S. Department of Labor in the covered area either individually or through an association, its affirmative action obligations on all work in the Plan area (including goals and timetables) shall be in accordance with that Plan for those trades which have unions participating in the Plan. Contractors must be able to demonstrate their participation in and compliance with the provisions of any such Hometown Plan. Each Contractor or Subcontractor participating in an approved Plan is individually required to comply with its obligations under the EEO clause, and to make a good faith effort to achieve each goal under the Plan in each trade in which it has employees. The overall good faith performance by other Contractors or Subcontractors toward a goal in an approved Plan does not excuse any covered Contractor's or Subcontractor's failure to take good faith efforts to achieve the Plan goals and timetables.

4. The Contractor shall implement the specific affirmative action standards provided in paragraphs 7.a through 7.p of these specifications. The goals set forth in the solicitation from which this contract resulted are expressed as percentages of the total hours of employment and training of minority and female utilization the Contractor should reasonably be able to achieve in each construction trade in which it has employees in the covered area. The Contractor is expected to make substantially uniform progress toward its goal in each craft during the period specified.

5. Neither the provisions of any collective bargaining agreement, nor the failure by a union with whom the Contractor has a collective bargaining agreement, to refer either minorities or women shall excuse the Contractor's obligations under these specifications, Executive Order 11246, or the regulations promulgated pursuant thereto.

6. In order for the nonworking training hours of apprentices and trainees to be counted in meeting the goals, such apprentices and trainees must be employed by the Contractor during the training period, and the Contractor must have made a commitment to employ the apprentices and trainees at the completion of their training, subject to the availability of employment opportunities. Trainees must be trained pursuant to training programs approved by the U.S. Department of Labor.

7. The Contractor shall take specific affirmative actions to ensure equal employment opportunity. The evaluation of the Contractor's compliance with these specifications shall be based upon its effort to achieve maximum results from its actions. The Contractor shall document these efforts fully, and shall implement affirmative action steps at least as extensive as the following:

   a. Ensure and maintain a working environment free of harassment, intimidation, and coercion at all sites, and in all facilities at which the Contractor's employees are assigned to work. The Contractor, where possible, will assign two or more women to each construction project. The Contractor shall specifically ensure that all foremen, superintendents, and other on-site supervisory personnel are aware of and carry out the Contractor's obligation to maintain such a working environment, with specific attention to minority or female individuals working at such sites or in such facilities.

   b. Establish and maintain a current list of minority and female recruitment sources, provide written notification to minority and female recruitment sources and to community organizations when the Contractor or its unions have employment opportunities available, and maintain a record of the organizations' responses.

   c. Maintain a current file of the names, addresses and telephone numbers of each minority and female off-the-street applicant and minority or female referral from a union, a recruitment source or community organization and of what action was taken with respect to each such individual. If such individual was sent to the union hiring hall for referral and was not referred back to the Contractor by the union or, if referred, not employed by the Contractor, this shall be documented in the file with reason therefore, along with whatever additional actions the Contractor may have taken.

   d. Provide immediate written notification to the Director when the union or unions with which the Contractor has a collective bargaining agreement has not referred to the Contractor a minority person or woman sent by the Contractor, or when the Contractor has other information that the union referral process has impeded the Contractor's efforts to meet its obligations.

   e. Develop on-the-job training opportunities and/or participate in training programs for the area which expressly include minorities and women, including upgrading programs and apprenticeship and trainee programs relevant to the contractor's employment needs, especially those programs funded or approved by the Department of Labor. The Contractor shall provide notice of these programs to the sources compiled under 7.b above.

   f. Disseminate the Contractor's EEO policy by providing notice of the policy to unions and training programs and requesting their cooperation in assisting the Contractor in meeting its EEO obligations; by including it in any policy manual and collective bargaining agreement; by publicizing it in the company newspaper, annual report, etc.; by specific review of the

policy with all management personnel and with all minority and female employees at least once a year and by posting the company EEO policy on bulletin boards accessible to all employees at each location where construction work is performed.

g. Review, at least annually, the company's EEO Policy and affirmative action obligations under these specifications with all employees having any responsibility for hiring, assignment, layoff, termination or other employment decisions including specific review of these items with on-site supervisory personnel such as Superintendents, General Foremen, etc., prior to the initiation of construction work at any job site. A written record shall be made and maintained identifying the time and place of these meetings, persons attending, subject matter discussed, and disposition of the subject matter.

h. Disseminate the Contractor's EEO policy externally by including it in any advertising in the news media, specifically including minority and female news media, and providing written notification to and discussing the Contractor's EEO policy with other Contractors and Subcontractors with whom the Contractor does or anticipates doing business.

i. Direct its recruitment efforts, both oral and written, to minority, female and community organizations, to schools with minority and female students and to minority and female recruitment and training organizations serving the Contractor's recruitment area and employment needs. Not later than one month prior to the date for the acceptance of applications for apprenticeship or other training by any recruitment source, the Contractor shall send written notification to organizations such as the above, describing the openings, screening procedures, and tests to be used in the selection process.

j. Encourage present minority and female employees to recruit other minority persons and women and, where reasonable, provide after school, summer and vacation employment to minority and female youth both on the site and in other areas of a Contractor's work force.

k. Validate all tests and other selection requirements where there is an obligation to do so under 41 CFR Part 60-3.

l. Conduct, at least annually, an inventory and evaluation at least of all minority and female personnel for promotional opportunities and encourage these employees to seek or to prepare for, through appropriate training, etc., such opportunities.

m. Ensure that seniority practices, job classifications, work assignments and other personnel practices, do not have a discriminatory effect by continually monitoring all personnel and employment related activities to insure that the EEO policy and the Contractor's obligations under these specifications are being carried out.

n. Ensure that all facilities and company activities are nonsegregated except that separate or single-user toilet and necessary changing facilities shall be provided to assure privacy between the sexes.

o. Document and maintain a record of all solicitations of offers for subcontracts from minority and female construction contractors and suppliers, including circulation of solicitations to minority and female contractor associations and other business associations.

p. Conduct a review, at least annually, of all supervisors' adherence to and performance under the Contractor's EEO policies and affirmative action obligations.

8. Contractors are encouraged to participate in voluntary associations which assist in fulfilling one or more of their affirmative action obligations (7.a through 7.p). The efforts of a contractor

association, joint contractor-union, contractor-community, or other similar group of which the contractor is a member and participant, may be asserted as fulfilling any one or more if its obligations under 7.a through 7.p of these specifications provided that the contractor actively participates in the group, makes every effort to assure that the group has a positive impact on the employment of minorities and women in the industry, ensures that the concrete benefits of the program are reflected in the Contractor's minority and female work force participation, makes a good faith effort to meet its individual goals and timetables, and can provide access to documentation which demonstrates the effectiveness of actions taken on behalf of the Contractor. The obligation to comply, however, is the Contractor's and failure of such a group to fulfill an obligation shall not be a defense for the Contractor's non-compliance.

9. A single goal for minorities and a separate single goal for women have been established. The Contractor, however, is required to provide equal employment opportunity and to take affirmative action for all minority groups, both male and female, and all women, both minority and non-minority. Consequently, the Contractor may be in violation of the Executive Order if a particular group is employed in a substantially disparate manner (for example, even though the Contractor has achieved its goals for women generally the Contractor may be in violation of the Executive Order if a specific minority group of women is underutilized).

10. The Contractor shall not use the goals and timetables or affirmative action standards to discriminate against any person because of race, color, religion, sex, or national origin.

11. The Contractor shall not enter into any Subcontract with any person or firm debarred from Government contracts pursuant to Executive Order 11246.

12. The Contractor shall carry out such sanctions and penalties for violation of these specifications and of the Equal Opportunity Clause, including suspension, termination and cancellation of existing subcontracts as may be imposed or ordered pursuant to Executive Order 11246, as amended, and its implementing regulations, by the Office of Federal Contract Compliance Programs. Any Contractor who fails to carry out such sanctions and penalties shall be in violation of these specifications and Executive Order 11246, as amended.

13. The Contractor, in fulfilling its obligations under these specifications, shall implement specific affirmative action steps, at least as extensive as those standards prescribed in paragraph 7 of these specifications, so as to achieve maximum results from its efforts to ensure equal employment opportunity. If the Contractor fails to comply with the requirements of the Executive Order, the implementing regulations, or these specifications, the Director shall proceed in accordance with 41 CFR 60-4.8.

14. The Contractors shall designate a responsible official to monitor all employment related activity to ensure that the company EEO policy is being carried out to submit reports relating to the provisions hereof as may be required by the Government and to keep records. Records shall at affiliation if any, employee identification number when assigned, social security number, race, sex, status (e.g., mechanic, apprentice, trainee, helper, or laborer), dates of changes in status, hours worked per week in the indicated trade, rate of pay, and locations at

which the work was performed. Records shall be maintained in an easily understandable and retrievable form; however, to the degree that existing records satisfy this requirement, contractors shall not be required to maintain separate records.

15. Nothing herein provided shall be construed as a limitation upon the application of other laws which establish different standards of compliance or upon the application of requirements for the hiring of local or other area residents

(a.g., those under the Public Works Employment Act of 1977 and the Community Development Block Grant Program).

16. The Contractor will receive at the time of Award Federal Form CC-257 for his use in reporting monthly the Affirmative Actions for minority and female which he has employed.

APPENDIX A

The following goals and timetables for female utilization shall be included in all Federal and federally assisted construction contracts and subcontracts in excess of $10,000. The goals are applicable to the Contractor's aggregate on-site construction work force whether or not part of that work force is performing on a Federal or federally assisted construction contract or subcontract.

AREA COVERED: Nationwide

GOALS AND TIMETABLES

Timetable	Goals (percent)
From April 1, 1978 until March 31, 1979	3.1
From April 1, 1979 until March 31, 1980	5.0
From April 1, 1980 until further notice	6.9

APPENDIX B

Until further notice, the following goals for minority utilization in each construction craft and trade shall be included in all Federal or federally assisted construction contracts and subcontracts in excess of $10,000 to be performed in the respective geographical areas. The goals are applicable to each nonexempt contractor's total on-site construction work force, regardless of whether or not part of that work force is performing work on a Federal, federally assisted or nonfederally related project, contract or subcontract.

Construction contractors which are participating in an approved Hometown Plan (see 41 CFR 60-4.5) are required to comply with the goals of the Hometown Plan with regard to construction work they perform in the area covered by the Hometown Plan. With regard to all their other covered construction work such contractors are required to comply with the applicable SMSA or EA goal contained in this appendix B-80.

State	Goal (percent)
Maryland:	
019 Baltimore, MD:	
SMSA Counties:	
0720 Baltimore, MD	23.0
MD Anne Arundel; MD Baltimore;	
MD Carroll; MD Harford;	
MD Howard; MD Baltimore City	
Non-SMSA Counties	23.6
MD Caroline; MD Dorchester;	
MD Kent; MD Queen Annes;	
MD Somerset; MD Talbot;	
MD Wicomico; MD Worcestar	
Washington, DC:	
020 Washington, DC:	
SMSA Counties:	
8840 Washington, DC	28.0
MD Charles; MD Montgomery;	
MD Prince Georges	
Non-SMSA Counties	25.2
MD Calvert; MD Frederick	
MD St. Marys; MD Washington	
Pennsylvania	
Non-SMSA Counties	4.8
MD Allegany: MD Garrett	

TRAINING PROVISIONS

As part of the Contract's Equal Employment Opportunity Affirmative Action Program, on-the-job training shall be provided as follows:

The on-the-job training shall be aimed at developing full journeypersons in the type of trade or job classification involved. On this Contract **10** persons will be trained.

In the event that a Contractor subcontracts a portion of the Contract work, the Contractor shall determine how many, if any, of the trainees are to be trained by the subcontractor, however, the Contractor shall retain the primary responsibility for meeting the training requirements imposed by this Provision. The Contractor shall also insure that this training Provision is physically included in each subcontract to insure that the workforce utilized by the subcontractor meet the goals for minority and female employment and training. Where feasible, 25 percent of apprentices or trainees in each occupation shall be in their first year of apprenticeship or training.

The number of trainees in each classification shall be distributed among the work classifications on the basis of the Contractor's needs, minority and women employment goals specified for each trade in the Contract Provision, and the reasonable area of recruitment.

Prior to beginning construction, the Contractor shall submit to the City for approval a Manpower and Training Utilization (MTU) Schedule no later than at the preconstruction meeting.

The MTU schedule shall include:

1. The proposed training programs.
2. The number of trainees to be trained in each classification.
3. Anticipated starting and ending dates for training in each classification.

No Contract work may be undertaken until the City has accepted the schedule.

If the submitted training programs fail to meet the requirements as defined within these Provisions, the City will withhold one percent of the total category code one pay items from the payment due the Contractor. The Contractor shall submit a revised Manpower and Training Utilization Schedule when major changes in the Contract work schedule occur that substantially affect the previously submitted schedule.

The Contractor shall be credited for each trainee employee who is currently enrolled or becomes enrolled in an approved program and will be reimbursed for the hourly cost of the trainee as specified in the schedule of prices.

Training and upgrading of minorities and women toward journeyperson status is a primary objective of this Training Provision. The purpose for this objective is to insure a pool of qualified minorities and women to replace those journeypersons who, in the natural course of events will leave the workforce. The program will also provide opportunities to the minorities and women trainees in geographic areas where shortages in minority and women journeypersons are prevalent and recognized due to the Contractor's inability to meet the Equal Employment Opportunity goals specified in this Contract.

The training requirements of this Training Provision are not intended nor shall they be used to discriminate against any applicant for training, whether a member of a protected class or not. It is the Contractor's responsibility to demonstrate good faith efforts to ensure an adequate workforce representation of minorities and women in all job classifications on this Contract. Therefore, the Contractor shall consider the employment Contract goals set for minorities and females when enrolling trainees. The Contractor's utilization of the on-the-job training goals will be weighed when an Equal Employment Opportunity workforce compliance determination is made.

The Contractor shall make every effort to enroll minority and women trainees (e.g., by conducting systematic and direct recruitment through public and private sources likely to yield minorities and women to the extent that these persons are available within a reasonable area of recruitment).

No employee shall be employed as a trainee in any classification which the individual has successfully completed a training program leading to journeyperson status or has been employed as a journeyperson. This includes a person gainfully employed as a journeyperson by virtue of informal on-the-job training. The Contractor should satisfy this requirement by including appropriate questions in the employee job application or by other suitable means. Regardless of the method used, the Contractor's records shall document the findings in each case. In the case of apprentices, evidence of indentureship and registration of the approved apprenticeship program shall be included in the Contractor's records.

The minimum length and type of training and rate for each classification shall be specified in the training program by the Contractor and approved by the City.

The City will approve any program specified in the City's On-The-Job Training Manual. The City will consider other programs if it is reasonably calculated that the programs conform to the Equal Employment Opportunity obligations of the Contract and will qualify the average trainee for journeyperson status in the specified classification by the end of the training period. Apprenticeship programs registered with the U.S. Department of Labor, Bureau of Apprenticeship and Training, or with a State apprenticeship agency recognized by the Bureau, and training programs approved by, but not necessarily sponsored by the U.S. Department of Labor, Employment and Training Administration, Bureau of Apprenticeship and Training will also be acceptable, provided that the program being offered is administered in a manner consistent with the Equal Employment obligation of Federal-aid highway construction Contracts and meets the minimum requirements of this Training Provision.

Some offsite training is permissible as long as the training is an integral part of an approved training program and does not comprise a significant part of the overall training.

Unless otherwise specified, the Contractor will be reimbursed 80 cents per hour of training given an employee on this Contract in conformance with an approved training program. As approved by the Engineer, reimbursement will be made for training persons in excess of the number specified herein. This reimbursement will be made even though the Contractor received additional training program funds from other sources, provided that the other sources do not specifically prohibit the Contractor from receiving other reimbursement. Reimbursement for offsite training indicated above will only be made to the Contractor where the Contractor does one or more of the following and the trainees are concurrently employed on a Federal-aid project:

1. Contributes to the cost of the training.

2. Provides the instruction to the trainee or pays the trainee's wages during the offsite training period.

No payment will be made to the Contractor if either the failure to provide the required training, or the failure to hire the trainee as a journeyperson is caused by the Contractor and evidences a lack of "good faith" on the part of the Contractor in meeting the requirements of this Training Provision. It is normally expected that a trainee will begin training on the project as soon as feasible after the start of work utilizing the skill involved and remain on the project as long as training opportunities exist in the work classification or until the program is completed. It is not required that all trainees be on board for the entire length of the Contract. A Contractor will have fulfilled their responsibilities under this Training Provision when:

1. Systematic and direct recruitment likely to yield qualified minority and women applicants is conducted through:

   a. Public and private referral sources.

   b. Advising the existing workforce of training opportunities.

   c. Unions (if applicable).

2. Acceptable training has been provided to trainees enrolled in the program.

3. The number of specified trainees have completed the minimum hours required in an approved training program.

4. Trainees completing approved programs are retained in the workforce as journeypersons.

The Contractor shall pay the trainees at least 60 percent of the appropriate minimum journeyperson's hourly rate plus the full fringe benefits specified in the Contract for the first half of the training period, 75 percent for the third quarter of the training period plus full fringe benefits, and 90 percent for the last quarter of the training period plus full fringe benefits. However, in no case shall the total hourly rate be less than the U.S. Department of Labor's unskilled laborer wage rate for the project. In addition, all trainees shall be identified as such on the certified payroll.

The Contractor shall furnish the trainee a copy of the approved training program in which the trainee is enrolled. The Contractor shall provide each trainee with a certificate showing the type and length of training satisfactorily completed. The Contractor shall submit a Certificate to the trainee in the following instances:

1. Certificate of Completion when a trainee completes the total number of hours required to complete a training program.

2. Certificate of Training when a trainee does not totally complete the required program hours.

The Contractor shall provide for the maintenance of records and furnish periodic reports inclusive of the City's Contractor's Semiannual Training Reports, documenting his performance under this Training Provision. The Semiannual Training Report is to be submitted by the 10th of the month following the reporting period (July 10 and January 10).

If the Contractor fails to fully comply with these Training Provisions, the City's Representative will make a final report of non compliance to the Administrator, who may direct the imposition of one or both of the sanctions listed below:

1. Withholding a percentage of the progress payment.

2. Other action appropriate and/or within the discretion of the Administrator.

NOTICE TO ALL HOLDERS OF THIS CONTRACT DOCUMENT

HIGH VISIBILITY SAFETY APPAREL POLICY

BACKGROUND. Research indicates that high visibility garments have a significant impact on the safety of employees who work on highways and rights-of-way. In addition, high visibility garments may help to prevent injuries and accidents and to make highway workers more visible to the motoring public, which ultimately improves traffic safety.

STATEMENT OF POLICY.

(a) The High Visibility Safety Apparel Policy provides a standardized apparel program.

(b) The program seeks to improve the visibility of all persons who work on Administration highways and rights-of-way.

(c) All apparel shall contain the appropriate class identification label.

(d) Compliance with this policy is retroactive and becomes effective immediately. All affected employees shall receive high visibility apparel awareness training.

APPLICABILITY. This policy applies to all Administration employees and all other persons who work on Administration highways and rights-of-way. All workers shall wear, at a minimum, Class 2 ANSI/ISEA 107/2004 apparel.

(a) For Administration employees, this apparel shall have a fluorescent yellow-green background material color and be the outermost garment worn.

(b) Retro-reflective material color for Administration employee apparel shall be silver or white and be visible at a minimum distance of 1,000 feet. The retro-reflective safety apparel shall be designed to clearly recognize and differentiate the wearer from the surrounding work environment. The retro-reflective material may be contrasted by fluorescent orange background material not exceeding one and one half inches on either side of the retro-reflective material.

(c) For non-Administration employees, this apparel shall be either fluorescent orange-red or fluorescent yellow-green background material color and be the outermost garment worn.

(d) Retro-reflective material color for non-Administration employee apparel shall either be orange, yellow, white, silver, yellow-green, or a fluorescent version of these colors, and be visible at a minimum distance of 1,000 feet. The retro-reflective safety apparel shall be designed to clearly recognize and differentiate the wearer from the surrounding work environment.

REFERENCES.

(a) ANSI/ISEA 107/2004 standard – American National Safety Institute/International Safety Equipment Association

(b) MUTCD 2003 – Manual for Uniform Traffic Control Devices - Sections 6D.03B and 6E.02

(c) Visibility Research – The VCTR 1989 report concludes that fluorescent colors, when compared with non-fluorescent colors, enhance the daytime conspicuity of worker clothing.

DEFINITIONS.

(a) Apparel – The outermost high-visibility garment worn by employees who work on Administration highways and rights-of-way.

(b) Highways – All roads owned by the Maryland Department of Transportation and maintained by the Administration.

(c) High Visibility – The ability for workers to be distinguishable as human forms to be seen, day and night, at distances that allow equipment operators and motorists to see, recognize, and respond.

PROJECT DESCRIPTION

The City of Baltimore Department of Transportation proposes to rehabilitate Central Avenue from Baltimore Street to Madison Street and the storm drain from Eastern Avenue to Orleans Street.

The work to be done under this Contract shall include the following:

1. A pre-construction survey.
2. Reconstruction and rehabilitation of Harford Run Storm Drain from Eastern Avenue to Orleans Street.
3. Construction of miscellaneous storm drain facilities from Baltimore Street to Madison Street.
4. Excavation, grading, paving and sidewalk construction from Baltimore Street to Madison Street.
5. Installation of signing and pavement markings from Baltimore Street to Madison Street.
6. Construction of traffic signal systems from Baltimore Street to Madison Street.
7. Construction of electrical duct systems from Baltimore Street to Madison Street.
8. Construction of roadway and pedestrian lighting from Baltimore Street to Madison Street.
9. Installation of landscaping features from Baltimore Street to Madison Street.
10. Installation of benches and trash receptacles from Baltimore Street to Madison Street.
11. The work includes maintenance of traffic and erosion and sediment control.
12. Miscellaneous work shown on the Contract Plans and/or called for in the Specifications.

SPECIFICATIONS

All work on this project shall conform to the Maryland Department of Transportation, State Highway Administration's Specifications entitled, "Standard Specifications for Construction and Materials" dated July 2008 revisions thereof, or additions thereto, and the Special Provisions included in this Invitation for Bids.

EMPLOYMENT AGENCY

Maryland Department of Human Resources is located at:

Talmadge Branch Building
1910 N. Broadway
Baltimore, Maryland 21213
Phone: (443) 423-6300

Saratoga State Center
311 W. Saratoga Street
Baltimore, Maryland 21201
Phone No. 410-767-7000

NOTICE TO CONTRACTOR

PROJECT SCHEDULE. Section 109 shall only apply when a CPM Project Schedule item is included in the Schedule of Prices. Otherwise, all Project Schedules shall conform to Section 110.

NOTICE TO BIDDERS. The Proposal Form Packet in this Invitation for Bids requires the following information be submitted for the Bidder and each firm quoting or considered as subcontractors:

(a) Name of firm.

(b) Address of firm.

(c) MBE, Non-MBE, DBE, or Non-DBE.

(d) Age of firm.

(e) Annual gross receipts per last calendar year.

Note that there are provisions for submitting copies for additional subcontractors, and that an "X" is required to indicate whether or not additional copies have been submitted.

AFFIRMATIVE ACTION PLAN (AAP) CONTRACT GOALS. In order to be in compliance with the revised MBE/DBE laws effective November 19, 2008 the bidder is required to complete the AAP information on pages 17, 18, 21, 22, 23, and 24 of 28 of the Contract Provisions, Proposal Form Packet —Federal, or complete the AAP information on pages 16, 17, 20, 21, 22, and 23 of 28 of the Contract Provisions, Proposal Form Packet—State, or complete the AAP information on pages 17, 18, 21, 22, 23, and 24 of 29 of the Contract Provisions, Proposal Form Packet—State Small Business Reserve Procurement. Failure to complete the information may be grounds for the bid to be declared non-responsive.

RIGHT OF WAY STATUS

Where required to complete the scope of work for the project, the City will procure all necessary rights and deeds for access to and use of any property not owned by the Mayor and City Council or that is not located within the existing right-of-way or easements through the Baltimore City Department of Transportation. It is anticipated that any such right of way clearances will be obtained prior to the start of construction. The Contractor shall not proceed with work on private property until the City has completed its negotiations with the property holders.

SPECIAL PROVISIONS
NOTICE TO CONTRACTOR

F.A.P. NO. STP-3057(4)N
S.H.A. CONTRACT No. BC320-001-815
BALTIMORE CITY CONTRACT NO. TR08310

MARYLAND STATE HIGHWAY ADMINISTRATION
PS&E CERTIFICATION OF ENVIRONMENTAL PERMITS
FOR LOCAL GOVERNMENT PROJECTS

FAP No. STP-3057(4)N State No. BC320-001-815 Baltimore City No. TR08310
Project: Rehabilitation of Central Avenue and Storm Drain, Eastern Avenue to Madison Street

PERMIT	Applied	Expected	Received
Erosion & Sediment Control	9/10/2010		11/18/2010
Stormwater Management	11/9/2010		11/18/2010
404 or Nationwide Permit	N/A		
US Coast Guard Permit	N/A		
MDE Wetlands License	N/A		
Waterway Construction Permits	N/A		
Other: NPDES	Pending		
Other:			
Other:			

PROPOSED SCHEDULE

Ad Date: 7/22/2011 Bid Open: 9/14/2011
Award: Pending NTP: Pending

☐ Environmental permits are not required.

☐ All environmental permits have been received as noted above and have been incorporated into the Invitation for Bids.

☒ All environmental permits are expected to be received prior to the scheduled bid opening. A statement has been inserted into the Invitation for Bids indicating that any missing permits will be incorporated into the Invitation for Bids by an approved addendum.

Certified by: Scott Weaver

Phone: 410-396-6935

SC-01 SUBMITTALS/QUESTIONS 10 DAYS BEFORE BID-DUE DATE

All submittals, questions and requests for additional drawings or documents shall be addressed to:

City of Baltimore
Attention: Mr. Scott Weaver
7 East Redwood Street, Room 1012
Baltimore, Maryland 21202
410.396.6935 or Fax 410.547.8276
Scott.Weaver@baltimorecity.gov

Questions will be answered in written form to all Contractors.

SC-02 SUBMITTALS AND QUESTIONS IN CONSTRUCTION STAGE

Attention: Roy Weil
Construction Project Supervisor
Department of Transportation
City of Baltimore
7 East Redwood Street, Room 1012
Baltimore, Maryland 21202
410.396.6913 or Fax 410.685.2848

Questions will be answered in written form.

SC-03 BOOK OF STANDARDS

Detail Plates and/or State of Maryland, Department of Transportation, State Highway Administrations' Standards for Highways and Incidental Structures, as called for or noted on the Plans or in the Special Provisions, shall be considered a part of the Contract Documents.

In any and all cases of conflict between the Standards and the Contract Documents, the Contract Documents shall govern but only to the extent of such conflict. Any reference in the contract Documents made to a Standard Number shall refer to the Book of Standards unless otherwise noted.

Copies of the Detail Plates which are applicable to this Contract are included herein.

SC-04 STANDARD REQUIREMENTS

All construction shall be in compliance with the standards of the *American with Disabilities Act* (ADA) and, Architectural and Transportation Barriers Compliance Board 1111 18th Street, NW, Suite 501.

SC-05 COORDINATION OF PLANS, SPECIFICATIONS AND SPECIAL PROVISIONS

The Contractor shall be responsible for maintaining at the work site a complete set of Plans, Specifications, and Special Provisions, completely posted to date with current references, revisions and any addenda which may be used. In this connection, General Provisions and Section 100 through 900 hereof are cross-referenced to the State Highway Administration Specifications by annotating the appropriate section therein. The purpose of this requirement is to facilitate on-site discussions and to insure familiarity with the terms of the Specifications.

SC-06 DAYS OF COMPLETION

Days of Completion for this Contract shall be **1960** Calendar Days. The contract days include time for the winter period and there will be no winter shutdown.

SC-07 WORK TO BE DONE BY THE CITY

The City will do or cause to be done, whether with its own Forces or under the Contracts or Agreements, the following work:

1. Obtaining Temporary Construction Easements.
2. Coordinate with owners of power, telephone, communication, and steam utilities for removal and/or relocation of equipment, except underground electrical conduits, from areas where their presence interferes with new construction.

SC-08 STAGING AREAS

Baltimore City Department of Transportation must approve all staging areas.

SC-09 AS-BUILT PLANS

After all work is completed, the Contractor shall be responsible for providing As-Built plans, as directed by the Engineer, on 24"x 36" sheets to the City of Baltimore in hard copy and electronic form (scanned as PDF files on CD's). The As-Built plans shall be corrected to show all parts of the contract work as finally built. Emphasis is placed on the importance of accurately recording all elevations and locations of both new and existing utilities within the project limits. Production of the As-Built plans shall be considered incidental to the cost of the Project.

SC-10 PROGRESS AHEAD SIGNS

The Contractor shall furnish, install and maintain 1 sign at each of the job limits for this project. Each sign shall be installed prior to the start of any construction operations and shall not be removed until construction operations are completed, at the direction of the Engineer. The cost of the Progress Ahead sign shall be incidental to the Engineer's Office item in the Contract.

The sign shall be 48" x 72" made of ¾" exterior type, high density overlaid plywood and shall be mounted to adequately permit public viewing. The sign shall be bonded along the edges of the

plywood with a 1" x 4" wood strip fastened flat to the edge of the sign at the middle of the width of the strip. The wording, coloring and size of the letters will be provided by the Engineer. Refer to the sign detail provided at the end of the section. It shall be the responsibility of the Contractor to maintain the sign in good condition throughout the life of the Contract.

SC-11 NOISE REQUIREMENTS

The Contractor shall adhere to any City Noise requirements and Section 10.04-86 of the General Provisions or to Baltimore City Health Department Noise Control Ordinance No.108, whichever is more stringent. The use of all mechanical equipment will be prohibited between the hours of 11 PM and 7 AM.

SC-12 CITY WILL FURNISH NO MATERIALS

The City will furnish no material to the Contractor.

SC-13 SHOP DRAWINGS

All drawings shall be no larger than 24" x 36" in size. The Contractor shall submit a list and schedule for shop plans and working drawings to the Engineer prior to the start of work. The Contractor shall allow for a 15-working-day review period upon the Engineer's receipt for the Engineer's approval or rejection of the Contractor's working drawings and design submission. The Contractor shall submit all estimates for products and services on the cost estimate worksheet provided by the City with the contract documents.

SC-14 PROTECTION OF EXISTING FEATURES

The Contractor shall take all necessary precautions to preserve all existing features outside of the limits of disturbance and shall restore to its pre-existing condition any area(s) damaged by his operations to the full satisfaction of the Engineer and the owner of the affected areas so damaged. Restoration of any areas damaged by the Contractor will be at his sole cost and expense.

SC-15 UTILITY LOCATION

The Contractor's attention is directed to the fact that there will be no compensation for any service fees charged for making and locating existing utilities. Payment by the Contractor for these service fees will be included in the unit price bid for various items bid in this Contract.

SC-16 SALVAGEABLE MATERIALS

Granite curb, Belgian blocks, granite blocks and cobblestone removed from this the project, shall be salvaged by the Contractor and delivered to the City's Maintenance Yard. The Contractor shall contact Brent Hooper 410-396-1113, forty-eight hours in advance of hauling to the location. Only the noted materials that are clean of any attached debris, or those with bituminous

concrete debris attached, will be accepted. The noted material shall become property of the Department of Transportation Maintenance Division. The cost of the salvaging and hauling shall be incidental to the other items in the Contract.

SC-17 TRAFFIC SIGNAL CABLES AND EQUIPMENT

The Contractor is directed to protect and maintain service to the existing traffic poles, signal equipment and traffic signal control cables during roadway and utility construction. The Contractor will be responsible to reinstall these facilities if damaged at his/her own expense. The Contractor will be required to reinstall any traffic loop detectors that are affected by roadway, resurfacing, and sidewalk or utility construction.

The Contractor is required to contact Mr. Raj Sharma at 410.396.6892 and Mr. Glenn Michael at 410.396.9065, two weeks prior to construction and changes in signal operation. Contact Mr. Mike Harrington at 410.396.6892 for traffic signal timing related operation.

SC-18 GENERAL ELECTRICAL WORK AND TESTING

1. This work shall consist of furnishing, installing, and testing of all applicable electrical items referred to in Category 800 items.

2. All materials and equipment installed as part of the permanent installation shall be new, UL listed, or labeled and shall conform to NFPA 70 (NEC), NESC, NEMA, IES, and local codes applicable to the area of installation.

3. Materials and equipment installed as part of the permanent installation shall also conform to AASHTO, ANSI, ASTM, EEI, IEEE and IPCEA codes applicable to the area of installation.

4. All installations shall conform to NFPA 70 (NEC), NESC, local utility company requirements, and State and local laws and ordinances governing the work. All the work shall be performed by or under the direct supervision of a licensed master electrician. The Contractor shall obtain and pay for all permits, licenses and inspection fees.

5. The Contractor shall supply all personnel and equipment required to successfully perform the following tests and shall furnish four certified copies of the complete test reports to the Engineer.

6. Not less than 30 days prior to commencement of each required test, the Contractor shall submit to the Engineer the types, styles or catalog numbers of all testing equipment to be used for the tests. A written certification shall be included stating when the testing equipment was last calibrated by an Administration approved testing agency. The calibration date shall be within 20 days of the date when the tests are to be performed. All tests are to be performed in the presence of the Engineer.

(a) Any defects found in the completed materials installation and specified equipment performance or workmanship shall be repaired or replaced immediately at no cost to the City.

Ground resistance testing shall be conducted using a megger ground tester, using the null balance fall of potential method. Corrected readings greater than 25 ohms will not be accepted.

(b) Circuit test to determine insulation resistance shall be performed on all cables of every circuit except those installed in lighting structures. The test shall conform to the City's testing requirements. Cable insulation resistance shall be a minimum of 10 megohms at 500 volts D.C. except loop detector wire and loop detector lead in shall have a minimum of 100 megohms at 500 volts D.C.

The Contractor shall demonstrate in a manner acceptable to the Engineer that all conductors are continuous, free from short circuits and unspecified grounds, and that all circuits are properly connected as specified in the Contract Documents.

(c) A performance test using the design power source shall be conducted by the Contractor prior to acceptance. The electrical system, including automatic control equipment, shall be operated for 30 consecutive days without failure. If any component fails, it shall be immediately replaced and the test shall be continued. The Contractor shall record each fault, the method and date of correction of each, and the beginning and end of the 30-day test period. If more than 5 percent of any component fails during the test, the component shall be replaced and the 30-day test cycle for the entire system shall be restarted.

(d) An illumination test shall be conducted by the Contractor to determine the illumination characteristics of the roadway lighting installation. The test shall conform to procedures approved by the City.

7. The Contractor shall be responsible to maintain all new materials until satisfactorily tested and their operation accepted by the Engineer.

8. After completion of the project, the Contractor shall furnish to the City three (3) sets of green-lined drawings that show the exact location and sizes of all structures, cables, conduits, and manholes. One set shall be submitted to the Engineer, Signal Engineering, and one set shall be submitted to the Street Lighting Section.

SC-19 STREET LIGHT CABLES

The Contractor is required to call Miss Utility (1-800-257-7777) five days prior to starting construction.

The Contractor's attention is directed to the fact that on these streets there is street light cable buried in the area. If the Contractor should damage a street cable/conduit during construction, the Contractor is directed to immediately notify Street Light Maintenance on 443-984-1113. The Maintenance Section will inspect the damage and will effect repairs of direct BGE of the Contractor in the repair of the damage. All such repairs would be made at the Contractor's expense.

In areas the Contractor is to remove the footway where there is buried Street Light Cable, the Contractor is directed to notify BGE on 410-685-0123. BGE may elect to install new cable prior to the installation of the new footway.

The Contractor will be required to call BGE for the installation of new cable. Notify BGE at least two weeks prior to starting work. The Contractor will be responsible for the cost of any repairs to the Street Light Cable which is damaged during construction operation except in the case where the Street Light Cable is directly encased in concrete curb and curb is to be excavated and repaired. The Contractor would be required to notify BGE immediately and allow BGE for reasonable time to make safe conditions and replace the cable.

The Contractor is required to provide temporary lighting in instances, if the lighting service is interrupted due to damage caused (light poles knocked down, wires or cables inadvertently cut) during construction. The Contractor is required to notify immediately to the City of Baltimore Street Lighting Maintenance Section at 443-984-1113. The Maintenance Section will effect repairs or direct the Contractor in the repair of the damage. All such repairs shall be made at the Contractor's expense.

SC-20 PUBLIC UTILITIES

Existing utilities have been generally located and shown on the Plans as they are believed to exist and have been determined with the best accuracy attainable from available record drawings and field surveys of visible surface features, and accessible vaults, manholes, inlets and associated structures. However, Baltimore City assumes no responsibility for the accuracy of said locations. The Contractor will be responsible for locating all existing utilities, and storm drain connections to the existing box culvert, safety of same. The Contractor shall also be responsible for coordinating his work with the work that others may be doing on utilities.

SC-21 MISS UTILITY

Before beginning any excavation, the Contractor shall give at least three (3) working days prior notice thereof, by contacting "MISS UTILITY" at 1.800.257.7777. The public service companies involved will thereafter mark the horizontal location of their underground facilities.

After the location marking has been performed by the public service companies and before beginning excavation operation, if the Contractor has reason to believe that a potential conflict may exist, he shall verify the actual location of the underground utilities by means of test pits.

Prior to digging the test pits, the Contractor shall notify the Engineer, who will advise the related utility owner.

SC-22 CONTINGENT ITEMS

Wherever in the total Contract Documents, including the Plans and this Contract Book, the term "Contingent" appears in describing an item or quantity of work, it is mandatory that the written approval and direction of the Engineer be obtained on an individual item basis, for use of the item or any quantity ascribed thereto, prior to commencing work operations on such item or items.

SC-23 PROTECTION OF EXISTING STRUCTURES

Work in this contract includes open excavation adjacent to existing structures. Existing structures are not to be undermined or damaged. Use sheeting or any other means deemed appropriate to protect said structures in conformance with the contract Documents and as directed by the Engineer. Existing structures include, but are not limited to, the following items:

1. Existing buildings in areas adjacent to and nearby the construction site.
2. Existing bridges, drains, and utilities, above, at, and below grade.

The cost of "Protection of Existing Structures" shall be included in the various prices bid for excavation and utility items in this Contract.

SC-24 PARKING METERS

Existing parking meter heads will be removed by the City. The Contractor is required to notify the City at 410.396.7576, forty-eight (48) hours in advance of parking meter removal. The removal of the parking meter posts will not be measured but shall be included in and incidental to the pertinent excavation item.

SC-25 U.S. POSTAL SERVICE COLLECTION BOXES

The Contractor should be aware that there are U.S. Postal Service Collection boxes within the limits of construction which will need to be removed and replaced by the postal service in order to complete the work. The Contractor is required to notify Mr. William Neal of the U.S. Postal Service at 410.347.4259 at least one full week prior to removal. The Contractor must supply the collection box identification number and exact location in order to facilitate scheduling for removal.

SC-26 PAVEMENT MARKINGS ON ADJACENT ROADWAYS

In the event that the Contractor contributes to the deterioration of pavement markings on roadways adjacent to the project, the Engineer may require the Contractor to provide pavement markings for the adjacent roadway.

The Contractor will be required to provide the markings in accordance with materials and construction methods approved by the Engineer.

All materials, labor, equipment, testing, pavement preparations, and all other incidentals will not be measured for payment but shall be replaced at the Contractors expense.

SC-27 TEMPORARY SIDEWALK

The Contractor's attention is directed toward the Baltimore City Code (1976 Edition) in which it is stated that whenever any sidewalk shall be dug or torn up by any person or corporation, the said person or corporation so digging up or tearing the sidewalk, shall, within two (2) days from the time of the beginning of digging away or tearing up sidewalk, construct over said sidewalk so dug or torn up, a substantial footway not less than three feet (3') wide with proper guards on the side for the use of the public, which shall be maintained until said sidewalk is restored and repaved in proper manner. This is brought to the Contractor's attention to remind him that no sidewalk area is to be left open for more than two (2) days, and if so, the preceding Provisions must be adhered to.

All materials, labor, equipment, and all other incidentals will not be measured for payment but shall be incidental to the Maintenance of Traffic item.

SC-28 COOPERATION WITH MERCHANTS

The Contractor must cooperate at all times with the Merchants within the Project limits regarding all construction activities and must focus particular attention on providing and maintaining access for pedestrians, residents and property owners as well as to loading and unloading areas within the limits of construction at all times.

SC-29 ALARM SYSTEMS

The Contractor shall, through contacting the merchants, obtain a list of those Security Companies that are providing security service systems to the businesses within the project limits. The Contractor shall notify, prior to starting construction activities that are adjacent to or in front of these businesses, the respective security companies that provide the protection. In addition, the Contractor shall also notify the Fire and Police Departments in advance of all construction activities in any block and/or half block, so that they are alerted to the possibility of construction operating and/or unexpected utility cuts/failures that may activate existing alarm systems. Cost for this work to be included in the lump sum price bid for "Mobilization".

SC-30 ABANDONED RAILROAD TRACK SYSTEMS

Track systems shown on the Contract Plans were derived from available information. It shall be the responsibility of the bidder during the preparation of his proposal to evaluate this information and conduct any investigations that he deems essential for the proper preparation of his bid.

Abandoned railroad track systems to be removed by the Contractor shall be understood to include but not necessarily be limited to, straight and curved track; switches and turn-outs; wooden, steel and concrete ties; yokes; earth, loose gravel, grouted gravel, and concrete ballast; miscellaneous metals including tie plates, fasteners, spikes, and tie rods; and grates, inlets and piping comprising track drainage systems.

The Contractor needs to be aware that existing wooden railroad ties may be contaminated with creosote and hence must be disposed of in accordance with all local, state and federal laws and regulations.

SC-31 GROUNDWATER

The reconstruction of Central Avenue will include the excavation and replacement of portions of an existing stone and brick storm drain and two concrete encased steel beam bridges. The prevailing groundwater elevations are generally located at or above the invert elevation of the proposed replacement box culvert/storm drain. The Contractor is alerted for the need to include in their price proposal the following potential effects of the groundwater elevations and conditions, as stated in the Geotechnical Engineering Report, on the construction cost:

1. The potential for "boiling" of the bottom of excavations where hydrostatic pressures become unequal between the outside and inside of support of excavation systems.

2. The occurrence of pockets of trapped groundwater at elevations higher than the groundwater elevations measured in the test borings. Wet soils were encountered in numerous borings above the measured groundwater table.

3. The occurrence of artesian conditions in the vicinity of the intersection of Orleans Street and Central Avenue. The test borings drilled at this location indicate a significant tendency for the soils to "run" when penetrated by the hollow stem augers during the test drilling. When penetrated, the silty sand and gravel soils "ran up" as much as six feet in the drilling augers. The use of a drilling mud, substantially more viscous than normal, was marginally successful in keeping the granular soils from being forced upward into the drilling augers. It is recommended the support of excavation systems be designed for hydrostatic pressures and penetrate the finer grained residual soils in order to seal off the granular, water bearing soils.

4. The occurrence of numerous active utilities located parallel to and perpendicular to the areas requiring excavation. These utilities are subject to failing due to horizontal or vertical movements of the surrounding soils. Any delays, costs, schedule impacts, or claims resulting from any conditions due to the affects of groundwater during the various excavation operations, including support of excavation, shall not be considered as basis for extra payment of any type.

SC-32 BALTIMORE METRO (NORTHEAST LINE)

The Baltimore Metro system (Northeast Line) crosses Central Avenue at a skew between East Baltimore Street and East Fairmount Avenue (approximate Stations 34+25 to 34+75). The tops

of the subway tunnels are located between approximate elevations -12 and -8. The contractor must take care not to extend any support of excavation systems to below approximate elevation 0.0 or as directed by the Engineer. The Contractor shall coordinate with the Mass Transit Administration (MTA) during design and construction in order to meet any special design and construction criteria required by MTA and obtain approval on his work plan and support of excavation systems in the vicinity of the Baltimore Metro System prior to the start of work. Location plans and soil profiles of the area are included in the Final Geotechnical Engineering Report.

Coordination with MTA and any related work will not be measured for payment, but shall be incidental to other pertinent items in this Contract. Any delays, costs, schedule impacts, or claims resulting from any conditions due to accommodating the requirements of MTA shall not be considered as basis for extra payment of any type.

SC-33 HAZARDOUS MATERIALS

Petroleum products were encountered during the test drilling program near the northeast corner of the intersection of Fayette Street and Central Avenue. Benzene, creosote and other hazardous materials were encountered during excavation in the Advanced Drain Repairs Contract (TR99049) at the intersection of Baltimore Street and Central Avenue. The Contractor is alerted that these materials may likely be encountered elsewhere within the limits of the Contract.

A report titled "Reconstruction of Central Avenue, Supplemental Site Investigation", dated April 2003, has been completed for this project and is available upon request. As a result of this investigation, several items have been added to this contract to address the potential handling and disposal of hazardous materials, including petroleum contaminated soil and water. It shall be the responsibility of the bidder during the preparation of his proposal to evaluate this information and conduct any investigations that he deems essential for the proper preparation of his bid.

SC-34 ADDITIONAL PROJECT DOCUMENTATION AVAILABLE UPON REQUEST

The following list of documents is available for review upon request. To obtain a copy, contact Scott Weaver, Project Engineer, at 410.396.6935.

- Geotechnical Engineering Report dated March 2003.
- Reconstruction of Central Avenue, Phase II – Site Investigation Report dated December 1999.
- Rehabilitation of Central Avenue and Storm Drain, Phase I Environmental Site Assessment, dated October 2008.
- Reconstruction of Central Avenue, Internal Televised Sanitary Sewer Inspections, dated January 2000.
- Central Avenue Storm Drain CCTV from Monument Street to Orleans Street, dated May 2008.
- Cross-sections for Central Avenue.
- Copies of existing plans for the existing Harford Run Drain.

SC-35 SEQUENCE OF CONSTRUCTION

The Sequence of Construction on this Project shall be as follows unless otherwise directed by the Engineer, dependent upon conditions encountered in the field. The Contractor may submit his own Sequence of Construction for approval prior to the commencement of construction.

1. Obtain permits.
2. Notify Baltimore City seventy-two hours prior to any construction activity.
3. Designate contractor's staging area(s).
4. The contractor shall complete storm drain rehabilitation before beginning roadway construction in the same block. Construction shall proceed block-to-block by the following sequence:
    a. Rehabilitate storm drain culvert.
    b. Install temporary traffic control and sediment control measures.
    c. Install utilities.
    d. Remove existing paving, curb & gutter, and sidewalk.
    e. Complete proposed full depth paving, curb & gutter, storm drain, and sidewalk.
    f. Install signing, lighting, and traffic signals as needed (i.e. foundations, connections).
    g. Remove sediment control measures with prior written approval from Baltimore City sediment control inspector.
    h. Temporary traffic controls to remain as needed.
    i. Repeat sequence for next block.
5. Complete signing, lighting, and traffic signal installation.
6. Complete landscaping.
7. Install asphalt wearing course and permanent pavement markings.
8. Remove temporary traffic controls.

SC-36 CONDUIT ROADWAY STRUCTURES

The Contractor's attention is directed to the fact that during the construction operation in which the roadway paving or sidewalk is excavated around any existing Conduit Structure, the Roadway Structure may be upgraded utilizing the new type of Roadway Structure which will be supplied to the Contractor by the City (size 36" frame and cover only). The Contractor will be required to contact **Mr. Pete Swann** at 410-396-1263, two weeks prior to any excavation in which these Roadway Structures are involved.

SC-37 SAMPLING DEVICES AND TESTING EQUIPMENT

The Contractor is to provide all sampling devices and testing equipment as per Section 111 of the Specifications.

SC-38 SAW CUTTING

All the full and partial depth saw cutting required for the removal of existing pavement and sidewalk will not be measured but the cost will be incidental to the pertinent excavation items. The 2" pavement saw cutting at the limits of pavement resurfacing shall be considered incidental to item "Milling Hot Mix Asphalt Pavement 0 Inch To 2 Inch".

THIS SIGN IS TO BE USED ON ALL FEDERAL / STATE FUNDED CONSTRUCTION CONTRACTS

PROGRESS AHEAD

CENTRAL AVENUE FROM EASTERN AVENUE TO MADISON STREET

COMPLETION DATE:

MONTH, YEAR

Questions? Call 410-###-#### or go to www.baltimorecity.gov

City of Baltimore Department of Transportation

NOTICE TO CONTRACTOR

EARLY SUBMISSIONS. The last sentence of the first paragraph of TC-5.02, "No work shall be started before receipt of the Notice to Proceed" shall not apply to the following:

After notification to the Contractor from the Administration that the Contractor is the apparent low bidder, the Contractor will be permitted to provide a written request to the Engineer to submit documentation for materials sources and working drawings for any items of work that have a long lead time and could jeopardize the project schedule. Upon written approval from the Engineer the Contractor may submit the applicable documentation to the Engineer.

Should the Contract not be awarded to the apparent low bidder who meets the requirements of the Contract, GP-8.10 will apply for all costs accrued for the preparation and approval of the working drawings and any resultant material purchase approved by the District Engineer and steel fabricated in conformance with the approved working drawings between the date the Contractor received notice of apparent low bidder and the date of notice that the apparent low bidder will not be awarded this Contract.

Should this Contract not be awarded to the apparent low bidder due to failure of the Contractor to comply with all award and execution requirements, all costs accrued for the preparation of the specific items and any resultant material purchased and steel fabrication shall be borne by the Contractor.

Failure of the Contractor to submit the early submissions will not be basis for delaying issuance of the Notice to Proceed or be considered a reason for a time extension.

INDEX

GENERAL PROVISIONS

GENERAL PROVISIONS – SECTION 1

DEFINITIONS AND TERMS 76
1.01 GENERAL 76
1.02 ORGANIZATIONAL STRUCTURE 76
1.03 ORGANIZATIONAL DEFINITIONS 76
1.04 ABBREVIATIONS 77
1.05 DEFINITIONS 78

GENERAL PROVISIONS – SECTION 2

BIDDING REQUIREMENTS AND CONDITIONS GP-7
2.01 BID IRREVOCABLE 82
2.02 CONTENTS OF BID FORMS 82
2.03 INTERPRETATION OF QUANTITIES IN BID SCHEDULE 82
2.04 SITE INVESTIGATION 82
2.05 TAXES-RESPONSIBILITY FOR PAYMENT, EXEMPTIONS, FORMS TO FILE, ETC 82
2.06 PREPARATION OF BID 83
2.07 PROPOSAL GUARANTY 83
2.08 DELIVERY OF BIDS 83
2.09 COMMUNICATIONS AND INTERPRETATIONS – PRIOR TO BID OPENING 83
2.10 AMENDMENTS TO INVITATION FOR BIDS 84
2.11 PRE-OPENING MODIFICATION OR WITHDRAWAL OF BIDS 84
2.12 LATE BIDS, LATE WITHDRAWALS AND LATE MODIFICATIONS 84
2.13 OPENING AND RECORDING OF BIDS 84
2.14 MISTAKES IN BIDS 84
2.15 MINOR IRREGULARITIES OR INFORMALITIES 84
2.16 CANCELLATION OF INVITATION FOR BIDS 84
2.17 REJECTION OF INDIVIDUAL BIDS OR PROPOSALS 84
2.18 REJECTION OF ALL BIDS 86
2.19 BID EVALUATION AND AWARD 86
2.20 TIE BIDS 86
2.21 MULTIPLE OR ALTERNATE BIDS 87
2.22 BID PROTESTS 87
2.23 PREQUALIFICATION OF BIDDERS 87

GENERAL PROVISIONS – SECTION 3

AWARD AND EXECUTION OF CONTRACT 89
3.01 AWARD OF CONTRACT (SEE GP – SECTION 2.19) 89
3.02 RETURN OF PROPOSAL GUARANTY 89
3.03 PERFORMANACE BOND AND PAYMENT BOND REQUIREMENTS 89
3.04 EXECUTION TO CONTRACT 89
3.05 FAILURE TO EXECUTE CONTRACT 89

GENERAL PROVISIONS – SECTION 4

SCOPE OF WORK 91
4.01 INTENT OF CONTRACT 91
4.02 GENERAL PROVISIONS CONTROLLING 91
4.03 ENTIRE CONTRACT 91
4.04 VARIATION IN ESTIMATED QUANTITIES 91

INDEX
GENERAL PROVISIONS

4.05 DIFFERING SITE CONDITIONS 91
4.06 CHANGES 92
4.07 NEGOTIATED PAYMENT PROVISION 92
4.08 UNAUTHORIZED WORK 93
4.09 FINAL CLEANUP 93
4.10 (RESERVED) 93

GENERAL PROVISIONS – SECTION 5
CONTROL OF THE WORK 94
5.01 AUTHORITY OF THE ENGINEER 94
5.02 CONFORMITY WITH CONTRACT REQUIREMENTS 94
5.03 DISCREPANCIES IN THE CONTRACT DOCUMENTS 94
5.04 COOPERATION BY CONTRACTOR 94
5.05 COOPERATION WITH UTILITIES 95
5.06 COOPERATION BETWEEN CONTRACTORS AND LOCATIONS 97
5.07 AUTHORITY AND DUTIES OF INSPECTORS 97
5.08 INSPECTION OF WORK 98
5.09 REMOVAL OF DEFECTIVE WORK 98
5.10 LOAD RESTRICTIONS 98
5.11 MAINTENANCE OF WORK DURING CONSTRUCTION 99
5.12 FAILURE TO MAINTAIN ENTIRE PROJECT 100
5.13 ACCEPTANCE FOR MAINTENANCE 100
5.14 CLAIMS 100
5.15 DISPUTE 100
5.16 CONSTRUCTION NOISE ABATEMENT MEASURES 102
5.17 ACCIDENTS 102
5.18 MAINTAINING FLOW OF SEWERS AND DRAINS 102
5.19 ADJACENT BUILDINGS AND PROPERTY 103

GENERAL PROVISIONS – SECTION 6
CONTROL OF MATERIAL 104
6.01 GENERAL 104
6.02 STORAGE AND HANDLING OF MATERIALS 104
6.03 UNACCEPTABLE MATERIALS 104
6.04 CITY FURNISHED MATERIAL 104
6.05 WATER SUPPLY 105

GENERAL PROVISIONS – SECTION 7
LEGAL RELATIONS AND RESPONSIBILITY TO THE PUBLIC GP-35
7.01 LAWS TO BE OBSERVED 106
7.02 PERMITS AND LICENSES 106
7.03 PATENTED DEVICES, MATERIALS AND PROCESSES 106
7.04 FEDERAL PARTICIPATION 106
7.05 CONSTRUCTION SAFETY AND HEALTH STANDARDS 107
7.06 PUBLIC CONVENIENCE AND SAFETY 107
7.07 DETOURS 107
7.08 BARRICADES AND WARNING SIGNS 108
7.09 FLAGGING OF MOTOR VEHICLE TRAFFIC 108
7.10 MAINTENANCE OF TRAFFIC 108
7.11 PRESERVATION AND RESTORATION OF PROPERTY 108
7.12 LAND, AIR AND WATER POLLUTION 109
7.13 RESPONSIBILITY FOR DAMAGE CLAIMS 110
7.14 LIABILITY INSURANCE 111

INDEX
GENERAL PROVISIONS

7.15 USE AND POSSESSION PRIOR TO COMPLETION 114
7.16 CONTRACTOR'S RESPONSIBILITY FOR THE WORK 114
7.17 CONTRACTOR'S RESPONSIBITY FOR UTILITY PROPERTY AND SERVICES 115
7.18 PERSONAL LIABILITY OF PUBLIC OFFICIALS 116
7.19 NO WAIVER OF LEGAL RIGHTS 116
7.20 NON-DISCRIMINATION 116
7.21 SANCTIONS UPON IMPROPER ACTS 118
7.22 NON-HIRING OF EMPLOYEES 118
7.23 CHOICE OF LAW 118
7.24 CONTINGENT FEE PROHIBITION 118
7.25 COST AND PRICE CERTIFICATION 119
7.26 CORPORATE REGISTRATION AND TAX PAYMENT CERTIFICATION 119
7.27 BUY AMERICAN STEEL ACT 119
7.28 MINORITY BUSINESS ENTERPRISE AND AFFIRMATIVE ACTION 119
7.29 PREVAILING WAGE CONTRACTS FOR PUBLIC WORKS 120
7.30 SMALL BUSINESS PROCUREMENTS 122
7.31 PLANT PEST REGULATIONS 122
7.32 MAINTAINING FLOW OF SEWERS AND DRAINS 123
7.33 ADJACENT BUILDING AND PROPERTY 123

GENERAL PROVISIONS – SECTION 8
PROSECUTION AND PROGRESS 124
8.01 SUBCONTRACTING 124
8.02 NOTICE TO PROCEED 124
8.03 PROSECUTION OF THE WORK 124
8.04 PROGRESS SCHEDULE 125
8.05 LIMITATIONS OF OPERATION 126
8.06 CHARACTER OF WORKMEN, METHODS AND EQUIPMENT 126
8.07 SUSPENSION OF WORK 127
8.08 TERMINATION FOR DEFAULT; DAMAGES FOR DELAY; TIME EXTENSIONS 127
8.09 LIQUIDATED DAMAGES 128
8.10 TERMINATION FOR CONVENIENCE OF THE CITY 128
8.11 SUCCESSFUL TERMINATION OF CONTRACTOR'S RESPONSIBILITY 131

GENERAL PROVISIONS – SECTION 9
PAYMENT 132
9.01 SCOPE OF PAYMENT 132
9.02 FORCE ACCOUNT WORK 132
9.03 PROGRESS PAYMENTS 134
9.04 FINAL ACCEPTANCE AND FINAL PAYMENT 135
9.05 LATE PAYMENTS 136

1 TO 80 DELETE GENERAL PROVISIONS IN ITS ENTIRETY.

INSERT: THE FOLLOWING:

GENERAL PROVISIONS – SECTION 1

DEFINITIONS AND TERMS

GP-1.01 GENERAL

All references to the Provisions of Article 21 of the Annotated Code of Maryland and the Provisions of Title 21 of "Comar" are inapplicable to the Contract and are incorporated by reference herein. Whenever Transit and Traffic is mentioned, it shall be construed to be Baltimore City, Department of Transportation.

Wherever in these General Provisions or in other Contract Documents the following terms or abbreviations are used, the meaning shall be as follows:

GP-1.02 ORGANIZATIONAL STRUCTURE

The Maryland Department of Transportation is composed of the following Administrations:

(i) Mass Transit Administration
(ii) State Highway Administration
(iii) State Aviation Administration
(iv) Motor Vehicle Administration
(v) State Railroad Administration
(vi) Office of Assistant Secretary, Administration
(vii) Maryland Port Administration

GP-1.03 ORGANIZATIONAL DEFINITIONS (REFER ALSO TO GP-1.05)

Administration – The word "Administration" shall mean the State Highway Administration, Maryland Department of Transportation or Baltimore City, Department of Transportation, as appropriate.

Administrator - The Chief executive officer of an Administration.

Assistant District Engineer Construction (ADE) – Chief, Inspection, Department of Transportation

Chief Engineer, State Highway Administration – Director, Department of Transportation

City – Mayor and City Council of Baltimore or its duly authorized representative.

City Department – Shall mean Baltimore City, Department of Transportation

Construction Inspection Division – Shall mean Inspection, Department of Transportation.

Department – The word "Department" shall mean the Maryland Department of Transportation.

Deputy Chief Engineer Construction – Chief, Inspection, Department of Transportation.

District Office – The words "District Office" shall mean Baltimore City, Department of Transportation.

Engineer – Any person designated by the Administrator or the Director, Department of Transportation acting directly or through his duly authorized representative, such representative acting within the scope of the particular duties assigned to him or of the authority given him.

Inspector – The authorized representative of the Director, Department of Transportation, assigned to make detailed inspection of any or all portions of the work, or materials therefor.

Secretary - The chief executive officer of the Maryland Department of Transportation.

GP-1.04 ABBREVIATIONS

AAN	American Association of Nurserymen
AAPA	American Association of Port Authorities
AAR	Association of American Railroads
AASHTO	American Association of State Highway and Transportation Officials
ACI	American Concrete Institute
AIA	American Institute of Architects
AIEE	American Institute of Electrical Engineers
AISI	American Iron and Steel Construction
ANSI	American National Standards Institute
ARA	American Railway Association
AREA	American Railway Engineering Association
ASCE	American Society of Civil Engineers
ASHRAE	American Society of Heating, Refrigeration and Air-Conditioning Engineers
ASLA	American Society of Landscape Architects
ASME	American Society Mechanical Engineers
ASTM	American Society for Testing and Materials
ATA	American Transit Association
AWWA	American Water Works Association
AWS	American Welding Society
AWPA	American Wood Preservers Association
AGC	Associated General Contractor of America
BCDOT	Baltimore City Department of Transportation
BOCA	Building Officials Conference of America
COMAR	Code of Maryland Regulations
CRSI	Concrete Reinforcing Steel Institute
EEI	Edison Electric Institute
EIA	Electronic Industries Association
EPA	Environmental Protection Agency
FAA	Federal Aviation Administration, U.S. Department of Transportation
FCC	Federal Communications Commission
FHWA	Federal Highway Administration, U.S. Department of Transportation
FRA	Federal Railway Administration, U.S. Department of Transportation
FSS	Federal Specifications and Standards, General Services Administration
IEEE	Institute of Electrical and Electronic Engineers
IES	Illuminating Engineers Society
IPCEA	Insulated Power Cable Engineers Association
IRT	Institute for Rapid Transit
MBMA	Metal Building Manufacturers Association
MSMT	Maryland Standard Method of Test (as developed by the State Highway (Administration)
MUTCD	Manual of Uniform Traffic Control Devices
NBFU	National Board of Fire Underwriters
NBS	National Bureau of Standards

NEC	National Electrical Code
NEMA	National Electrical Manufacturers Association
NFPA	National Fire Protection Association
OSHA	Occupational Safety and Health Administration
RLMI	Reflector and Lamp Manufacturers Institute
SAE	Society of Automotive Engineers
SAWP	Society of American Wood Preservers
ULI	Underwriters Laboratories, Inc.
UMTA	Urban Mass Transportation Administration, U.S. Department of Transportation

GP-1.05 DEFINITIONS

Agreement - The Agreement between the Contractor and the City which is a document forming a part of the Contract.

Award - The decision of the City, with the concurrence of the State Highway Administration, to accept the proposal of the lowest responsible pre-qualified bidder.

Bid – A statement of price, terms of sale, and description of the supplies, services, or construction offered by a vendor to the City.

Bid Board - A bulletin board displayed in an area to which the public has access and on which is posted solicitations or announcements of availability of solicitations or both.

Bid Bond - See **"Proposal Guarantee"**

Bid Form - The approved form on which an Administration requires bids to be set forth and submitted.

Bidder – A person formally submitting a bid for the work contemplated, acting directly or through a duly authorized representative.

Board – Board of Estimates of Baltimore City (Mayor, City Comptroller, City Solicitor, President of the City Council and the Director, Department of Transportation.)

Business – A corporation, partnership, individual, sole proprietorship, joint venture, or any other legal entity through which commercial activity is conducted.

Calendar Day – Every day shown on the calendar, Saturdays, Sundays, and holidays included.

Change Notice – A written or an oral directive issued by the Engineer, directing a Contractor to make changes in the work.

Change Order – A written order, signed by the responsible Engineer, directing a Contractor to make changes which the changes clause of a Contract authorizes the Engineer to order, with or without the consent of the Contractor.

Charter – The Baltimore City Charter approved by the vote of the citizens of Baltimore City, November 5, 1918 and any and all amendments thereto.

City – Mayor and City Council of Baltimore, or their duly authorized representatives.

Construction - The process of building, adding, altering, converting, relocating, renovating, replacing or restoring of real property in which the State or City has an interest.

Contingent Item – Any item listed in the contract documents and included in the bid for the purpose of obtaining a contract price. Such bid constitutes tender of an exercisable option to incorporate such items into the work in accordance with stated terms at bid prices.

Wherever, in the Contract Documents, including the Plans and the Contract book, the term **Contingent** appears in describing any item or quantity of work, it is mandatory that the written approval and direction of the Engineer be obtained, on an individual item basis, for use of the item for any quantity ascribed thereto prior to commencing work on such item or items.

Contract – Any agreement entered into by a State or City agency for the procurement of supplies, services, construction, or other item. It includes:

(1) Awards and Notices of Award
(2) Contracts of a fixed-price, cost-reimbursement, cost-plus-a-fixed-fee, fixed-price incentive, or cost-plus incentive fee type
(3) Contracts providing for the issuance of job or task orders
(4) Leases
(5) Letter contracts
(6) Purchase orders
(7) Supplemental agreements with respect to any of these
(8) Orders for additional work and
(9) Grants

Contract does not include:

(1) Collective bargaining agreements with employee organizations or

(2) Medical, Medicare, Judicare, or similar reimbursement contracts for which users eligibility and cost are set by law or regulation.

Contract Documents – The written agreement executed between the City and the successful bidder, covering the performance of the work and furnishing of labor, equipment and materials, by which the Contractor is bound to perform the work and furnish the labor, equipment and material, and by which the city is obligated to compensate him therefor at the mutually established and accepted rate or price. The Contract shall include the Invitation for Bids, Notice to Contractor, Instructions to Bidders, Proposal, Contract Forms and Bonds, General Provisions, Specifications, all Special Provisions, all Technical Provisions, all Plans and Notice to Proceed; also any written Change Orders and Supplemental Agreements that are required to complete the construction of the work in an acceptable manner, including authorized extension thereof.

Contract Drawings – See "Plans"

Contract Item (Pay Item) – An item of work specifically described and for which a price, either unit or lump sum, is approved. It includes the performance of all work and the furnishing of all labor, equipment and materials, described herein or described in any Special Provisions.

Contract Modification – Any written alteration in the Specifications, delivery point, date of delivery, Contract period, price, quantity, or other provision of any existing Contract, whether accomplished in accordance with a Contract provision, or by mutual action of the parties to the Contract. In includes change orders, extra work orders, supplemental agreements, contract amendments, reinstatements, or options/renewals.

Contract Time or Completion Date – The number of working or calendar days shown in the Contract indicating the time allowed for the completion of the work. In case a calendar date of completion is shown in the Contract, in lieu of the number of working or calendar days, such work shall be completed by that date.

Contractor – Any person of firm having a contract with a City and State Agency. Contractor does not include employees with labor contract (collective bargaining agreements).

Controlling Operation – An operation of either major or minor proportions, which at the particular time under consideration, has a controlling effect on the progress of the project as a whole.

Day – Calendar day, unless otherwise designated.

District Engineer – Director. Department of Transportation

Easement – A grant of right of use of the property of an owner, for a certain purpose, at the wish of the grantee.

General Working Hours – Unless otherwise specified or directed by the Engineer, the regular working day shall begin no earlier than 7:00 a.m.

Highway Standards – The Book of Standards for Highway and Incidental Structures, edited by the State Highway Administration, with the latest incorporated revisions, issued on or before the date of advertisement of the Contract.

Invitation for Bids – Any document, whether attached or incorporated by reference, used for soliciting bids under procurement by competitive sealed bidding and small procurement procedures including requests for quotations.

Invitation for Quotation – Invitation for Bids.

Laboratory – The testing laboratory of the State Highway Administration (or other Administrations) or any other testing laboratory which may be designated by the Engineer.

Materials – Any substances specified for use in the construction of the project and its appurtenances.

Notice to Contractors – The Advertisement for Bids for all required work or materials. Such advertisement will indicate the location and magnitude, of the work to be done or the character and quantity of the material to be furnished and the time and place of the opening of bids.

Notice to Proceed – A written notice to the Contractor of the date on or before which he shall begin the prosecution of the work to be done under the Contract.

Payment Bond – Security guarantee, as stated in Baltimore City Charter, Article 6, that Contractor will pay in full, all bills and accounts for materials and labor used in work, as provided by law.

Performance Bond – Security, as stated in Baltimore City Charter Article 6, guaranteeing complete performance of Contract.

Person – Any individual, business, union, committee, club, or other organization.

Plans – The official drawings issued by the Administration as part of the Contract Documents, including those incorporated in the Contract Documents by reference.

Procurement Officer – Shall not apply to this Contract.

Proposal – The response by an offer to a solicitation of the Department for construction. The response may include, but is not limited to, an offer's price and terms for the proposed contract, and description of technical expertise, work experience and other information as requested in the solicitation. As used herein, the word **"Proposal"** means "Bid".

Proposal Form – The approved form on which an Administration requires proposals to be set forth and submitted.

Proposal Guarantee – Certified check, bank cashier's check, bank treasurer's check, bid bond drawn upon a solvent clearing-house bank designated in the proposal, to be furnished by the offer as a guaranty of good faith to enter into a contract with the City, if the work on constructing the improvement is awarded to him.

Questionnaire – The approved from or forms upon which the Contractor shall furnish the information as to his ability to perform the work, his experience in similar work, the equipment to be used, and his financial condition as related to his ability to finance the work.

Responsible Bidder or Offer – A person who has the capability, in all respects, to fully perform the Contract requirements, and the integrity and reliability which will assure good faith performance.

Responsive Bidder – A person who has submitted a bid under procurement by competitive sealed bidding which conforms in all material respects to the requirements contained in the Invitation for Bids.

Specification – A written description of functional characteristics, or the nature of a construction item to be procured. It may include a statement of any of the user's requirements and may provide for inspection, testing, or preparation of a construction item before procurement.

Standard Specifications – A book of specifications intended for general application and repetitive use.

State – The State of Maryland, acting through its authorized representative.

Subcontractor - Any person undertaking the construction of a part of the work under the terms of the Contract, by virtue of an agreement with the Contractor, who prior to such undertaking, receives the consent of the surety and the approval of the Director, Department of Transportation.

Superintendent – The executive representative of the Contractor, authorized to receive and execute instructions from the Engineer, and who shall supervise and direct the construction.

Supplemental Agreement – Any Contract modification which is accomplished by the mutual action of the parties.

Surety – The corporate body bound with and for the Contractor for the full and complete performance of the Contract and for the payment of all debts pertaining to the work. When applying to the Bid Bond, it refers to the corporate body which engages to be responsible for the execution by the bidder, of a satisfactory Contract.

Third Tier Contracting – The process in which the Contractor subcontracts a portion of the Contract to a subcontractor who in turn subcontracts a portion of a subcontract to a third party. The latter action is termed entering into Third Tier Contract.

GENERAL PROVISIONS – SECTION 2

BIDDING REQUIREMENTS AND CONDITIONS

GP-2.01 BID IRREVOCABLE

Unless otherwise provided in the Invitation for Bids, bid prices are irrevocable for 90 days following bid opening.

After opening bids, the Director, Department of Transportation, may request bidders to extend the time during which the City may accept their bids, provided that, with regard to bids, no other change is permitted.

GP-2.02 CONTENTS OF BID FORMS

All papers included in, bound thereto, or attached to the bid form, are necessary parts thereof and shall not be detached, separated or altered. The Plans and Specifications referred to in the Specifications, and all other Contract Documents will be considered a part of the bid form, whether attached thereto or not.

GP-2.03 INTERPRETATION OF QUANTITIES IN BID SCHEDULE

Where designated as estimated quantities, the quantities in the prepared bid schedule are approximate only. Payment to the Contractor will be made only for the actual quantities of work performed or materials furnished in accordance with the Contract and as provided in **GP-4.04, Variations in Estimates Quantities.**

GP-2.04 SITE INVESTIGATION

The Contractor acknowledges that he has satisfied himself as to the conditions affecting the work, including but not restricted to, those bearing upon transportation, disposal, handling and storage of materials, availability of labor, water, electric power, roads and uncertainties of weather, river stages, tides or similar physical conditions at the site, conformation and conditions of the ground and the character of equipment and facilities needed preliminary to and during prosecution of the work. The Contractor further acknowledges that he has satisfied himself as to the character, quality and quantity of surface and subsurface materials or obstacles to be encountered insofar as this information is reasonably ascertainable from an **inspection of the site** and including all exploratory information in possession of the City and State, as well as from information presented by the Drawings and Specifications made a part of this Contract. Any failure by the Contractor to acquaint himself with the available information shall not relieve him from responsibility for properly estimating the difficulty or cost of successfully performing the work. The City and State assume no responsibility for any conclusions or interpretations made by the Contractor on the basis of the information made available by the City and the State.

GP-2.05 TAXES – RESPONSIBILITY FOR PAYMENT, EXEMPTIONS, FORMS TO FILE, ETC.

(a) The Contractor is responsible for, and by submitting a bid agrees to pay, all retail sales, income, real estate, sales and use, transportation and special taxes applicable to and assessable against any materials, equipment, processes and operations incidental to or involved in the construction. The Contractor is responsible for ascertaining and acquainting himself with such taxes and making all necessary arrangements to pay same.

(b) The Contractor shall indicate its Federal Tax Identification or Social Security number on the face of each invoice billed to the City.

(c) Any payment under this Contract may be withheld until the Contractor and any subcontractors performing Duties under the Contract have paid all state taxes or other obligations due to the City and the State of Maryland. Taxes, or other obligations owed, shall be resolved either by set-off of the amount due the Contractor against the amounts due the City and the State or by direct payment.

GP-2.06 PREPARATION OF BID

(a) The bidder shall submit his bid upon the blank forms furnished by the City. The bidder shall specify a price in dollars and cents for each pay item given, and shall show the products of the respective unit prices and quantities written in figures in the column provided for the purpose, together with the total amount of the bid obtained by adding the amounts of the several items.

(b) The bid form(s) shall be filled out legibly in ink, or typed. The bid, if submitted by an individual, shall be signed by such member or members of the partnership as have authority to bind the partnership. If submitted by a corporation, the same shall be signed by an officer with authority to bind the corporation, and attested by the corporate secretary or an assistant corporate secretary. If not signed by an officer as aforesaid, there must be a copy attached of that portion of the by-laws or a copy of a Board resolution, duly certified by the corporate secretary, showing the authority of the person signing on behalf of the corporation. In lieu thereof, the corporation may file such evidence with the City, duly certified by the corporate secretary, together with a list of the names of the officers having authority to execute documents on behalf of the corporation, duly certified by the corporate secretary, which listing shall remain in full force and effect until such time as the City is advised, in writing, to the contrary. In any case, where a bid is signed by an Attorney-in-Fact, the same must be accompanied by a copy of the appointing document, duly certified. All bids shall be signed in ink. All erasures or alterations shall be initialed by the signer in ink.

(c) **Bid Samples and Descriptive Literature.** If the Invitation for Bids requires the bidder to furnish samples or descriptive literature, they shall be submitted with the bid, unless the Invitation for Bids provides otherwise.

(d) **Officers** shall identify those portions of their proposals which they deem to be confidential, proprietary information or trade secrets and provide any justification as to why such materials should not be disclosed by the City under the Maryland Public Information Act, Section 10-611 et seq. of the State Government Article of the Annotated Code of Maryland.

GP-2.07 PROPOSAL GUARANTY

(a) No bid will be considered for any contract in excess of $100,000 unless accompanied by a guaranty in an amount not less than 5% of the amount bid, or such amount as may be specified elsewhere in the bid documents. The guaranty shall be payable to the Mayor and City Council of Baltimore.

(b) No proposals will be considered unless accompanied by a certified check, bank cashier's check, bid bond or bank treasurer's check, drawn on a solvent clearinghouse or bank, made payable to the Mayor and City Council of Baltimore, or cash, as specified in the Notice of Letting and Proposal form.

GP-2.08 DELIVERY OF BIDS

Each bid shall be submitted in a special envelope furnished by the City with the proposal form. The blank spaces on the envelope shall be filled in correctly so as to indicate its contents clearly. If forwarded by mail, the above mentioned envelope shall be enclosed in another, addressed the "City Comptroller, Room 204, City Hall, Baltimore, Maryland 21202", preferably by registered mail. If forwarded otherwise than by mail, it shall be delivered at the Office of the City Comptroller. Bids will be received until the time and date set in the Notice of Letting.

GP-2.09 COMMUNICATIONS AND INTERPRETATIONS - PRIOR TO BID OPENING

Any information regarding the requirements or the interpretation of any provision of the General Provisions Special General Provisions, Specifications or any part of the bidding document shall be requested, in writing from the Director, Department of Transportation, and delivered no later than ten days prior to the scheduled date of bid opening. Responses to questions or inquiries having any material affect on the bids shall be made by written addenda, or by written notice sent to all prospective bidders. **DO NOT MAKE VERBAL INQUIRIES.**

Any oral interpretations or oral pre-bid statements made by City or State employees or their representatives shall not be binding upon the City or State.

GP-2.10 AMENDMENTS TO INVITATION FOR BIDS

(a) **Form.** Amendments to Invitations for Bids shall be in writing and identified as such.

(b) **Acknowledgement.** Unless otherwise provided, the bidder shall acknowledge receipt of all amendments.

GP-2.11 PRE-OPENING MODIFICATION OR WITHDRAWAL OF BIDS

(a) **Procedure.** Bids may be notified or withdrawn by written notice received in the office designated in the Invitation for Bids before the time and date set for bid opening. A telegraphic modification or withdrawal received by telephone from the receiving telegraph company office before the time and date set for bid opening shall be effective if the telegraph company confirms the telephone message by sending a written copy of the telegram showing that the message was received at the telegraph company's office before the time and date set for bid opening..

(b) **Disposition of Bid Security.** If a bid is withdrawn in accordance with this regulation, the bid security, if any, shall be returned to the bidder.

GP-2.12 LATE BIDS, LATE WITHDRAWALS AND LATE MODIFICATIONS

(a) **Policy.** Any bid received at the place designated in the solicitation after the time and date set for receipt of bids is late. Any request for withdrawal or request for modification received after the time and date set for opening of bids at the place designated for opening is late.

(b) **Treatment.** A late bid, late request for modification, or late request for withdrawal may not be considered. Late bids will be returned to the bidder unopened. Upon written approval of the Comptroller's Office, exceptions may be made when a late bid, withdrawal, or modification is received before Contract award, and the bid, withdrawal, or modification would have been timely but for the action of inaction of personnel directing the procurement activity.

NOTE: Provision GP-2.12(b) does not apply to Federal Aid projects.

GP-2.13 OPENING AND RECORDING OF BIDS

Bids will be publicly opened by the Board of Estimates at the time and date set forth in the Notice of Letting, in Room 204, City Hall, 100 North Holliday Street, Baltimore, Maryland. Bidders or their authorized agents are invited to be present.

The Director, Department of Transportation, shall examine the bids to determine the validity of any request for nondisclosure of trade secrets and other proprietary data identified in writing. Confidential data, proprietary information, and trade secrets furnished by a bidder or officer may be disclosed to another City or State agency if there is a need for the information and may not be disclosed outside of State or City government except as provided by the Public Information Act or other applicable laws of this State.

GP-2.14 MISTAKES IN BIDS

Pursuant to, and in compliance with, the charter of Baltimore City (1964 revision, as amended), any recommendation which may be made by any municipal agency to the Board of Estimates as to the appropriate award to be made by the Board shall be advisory only and not binding upon the Board.

(a) **Confirmation of Bid.** When the Director, Department of Transportation, knows or has reason to conclude that a mistake may have been made, the bidder may be required to confirm the bid. Situations in which confirmation may be requested include obvious, apparent errors on the face of the bid or a bid unreasonably lower than the other bids submitted. If the bidder alleges mistake, the bid may be corrected or withdrawn only with the approval of the Board of Estimates, and if any of the following conditions are met:

(1) If the mistake and intended correction are clearly evident on the face of the bid document, the bid shall be corrected to the intended correct bid and may not be withdrawn. Examples of mistakes that may be clearly evident on the face of the bid document are typographical errors, errors in extending unit prices, transposition errors, and arithmetical errors.

(b) **Mistakes Discovered After Award.** Mistakes may not be corrected after award of the Contract except when the Board of Estimates makes a determination that it would be unconscionable not to allow the mistake to be corrected. Changes in bid prices or the total bid price are not permitted. Corrections shall be submitted to, and approved by, the City Law Department.

GP-2.15 MINOR IRREGULARITIES OR INFORMALITIES

Minor irregularities or informalities in bids, as defined below, may be waived if the Board of Estimates determines that it shall be in the City's best interest. The Board of Estimates may either give a bidder an opportunity to correct any deficiency resulting from a technicality or minor irregularity in his bid, or waive the deficiency where it is to the City's advantage to do so.

When, at any public opening of bids, a bid appears to be irregular, as herein specified, this fact may be announced when read. At the option of the Board of Estimates, said bid may be read as other bids and then referred to the Director, Department of Transportation, for consideration and appropriate action thereon in accordance with these General Provisions, Law and Regulation.

A minor irregularity is one which is merely a matter of form and not of substance or pertains to some immaterial or inconsequential defect or variation of a bid or proposal from the exact requirement of the solicitation, the correction or waiver of which would not be prejudicial to other bidders or offers. The defect or variation in the bid or proposal is immaterial and inconsequential when its significance as to price, quantity, quality or delivery is trivial or negligible when contrasted with the total cost or scope of the supplies or services being procured and the intent and meaning of the entire bid or proposal is clear.

GP-2.16 CANCELLATION OF INVITATION FOR BIDS

(a) A solicitation may be canceled in whole or in part before opening of bids when the City determines this action is fiscally advantageous or otherwise in its best interest.

(b) When a solicitation is canceled before bid opening, the bids shall be returned unopened to the vendors submitting them and notice of cancellation shall be included.

GP-2.17 REJECTION OF INDIVIDUAL BIDS OR PROPOSALS

A. Any bid may be rejected in whole or in part when it is in the best interest of the City to do so.

B. Reasons for rejection of a bid may include but are not limited to:

1. The bid is not responsive i.e., it does not conform in all material respects to the solicitation.
2. Unreasonable price
3. The bidder submitting the bid is determined to be non-responsible. A determination of non-responsibility may be made for, but is not limited to, any of the following reasons:

a. Bidder debarred or ineligible and the period of debarment or ineligibility not expired.
b. The unit prices contained in a bid are unbalanced.
c. Evidence of collusion among bidders
d. Inadequate quantity and/or quality of experience, plant, equipment, financing, manpower or other resources required to perform the Contract
e. Bidder's workload which, in the judgement of the Engineer, might hinder or prevent the prompt completion of the subject work, if awarded.
f. Default by the bidder on other contracts
g. Failure to pay or satisfactorily settle all reasonable and just bills due for labor and material on prior or current contracts
h. The same person has an interest in more than one bid on a contract exclusive or being named by another bidder as a subcontractor.
i. Failure to perform satisfactorily on other contracts awarded, and the conditions leading to unsatisfactory performance remain unresolved
j. Any other reason affecting the bidder's ability to perform or his record of business integrity
k. Not otherwise qualified and eligible to receive an award under applicable laws and regulations

4 . The bidder or officer fails to supply information to the Engineer promptly, after notification from the Engineer that such information is required in connection with a determination to be made pursuant to **GP-2.17.**

GP-2.18 REJECTION OF ALL BIDS

(a) After opening of bids or proposals, but before award, all bids or proposals may be rejected in whole or in part if the Board of Estimates determines that this action is fiscally advantageous, or otherwise in the City's best interest.

(b) A notice of rejection of all bids shall be sent to all vendors that submitted bids, and bids which have been opened shall be retained by the Board of Estimates.

GP-2.19 BID EVALUATION AND AWARD

The award of the Contract, if it is awarded, will be to the lowest qualified bidder whose proposal complies with all the requirements prescribed.

The successful bidder will be notified, by letter mailed to the address shown on his proposal, that his bid has been accepted and that he has been awarded the Contract.

Prior to award, the bidder must submit a completed plan and equipment questionnaire and work capacity statement, under oath, on forms furnished by the Pre-qualification Committee. The forms must be fully completed and returned within ten days after date of receipt by the Contractor. The plan and equipment questionnaire must show the plan of procedure and the availability of sufficient equipment and qualified personnel. The work capacity statement shall show the volume of work actually being performed for the City and for others as of the bid date. The total dollar volume will be a charge against the Contractor's work capacity after credit for work performed has been allowed.

GP-2.20 TIE BIDS

(a) Definition – Tie bids are responsive bids from responsible bidders that are identical in price, terms and conditions and which meet all the requirements and evaluation criteria set forth in the Invitation for Bids.

(b) Award – In the instance of low tie bids and subject to the Board of Estimate's approval, a drawing may be conducted. A witness shall be present to verify the drawing and the result shall be certified on the bid tabulation sheet.

GP-2.21 MULTIPLE OR ALTERNATE BIDS

Unless multiple or alternate bids are requested in the solicitation, such bids may not be accepted. However, if bidder clearly indicates a base bid, it shall be considered for award as though it were the only bid submitted by the bidder.

GP-2.22 BID PROTESTS

A bid protest must be in writing and filed with the Board of Estimates, 204 City Hall, Baltimore, Maryland 21202. Oral objections, whether or not acted on, are not protests.

(a) Time of Filing

(1) Bid protests shall be filed not later than 7 days after the basis for protest is known or should have been known, whichever is earlier.

(2) Protests based on alleged improprieties in the solicitation which are apparent before the bid opening or the closing date for receipt of the Invitation for Bids shall be filed before the opening date or the closing date for receipt of the bids.

(b) Content of Written Protest

(1) Name and address of protester
(2) Bid contract number
(3) Reasons for protest
(4) Supporting exhibits, evidence or documents to support claim. If not available, within filing time, indicate expected availability date
(5) Mark envelope **"Protest"**

GP-2.23 PREQUALIFICATION OF BIDDERS

All Contractors and Subcontractors desiring to bid on, or subcontract for, work constructed under the jurisdiction of the Baltimore City, Department of Transportation, State Highway Administration of Maryland, will be required to be pre-qualified with the City of Baltimore.

Only the bids of contractors who hold a pre-qualification certificate at the time of bid opening will be considered.

All applicants for pre-qualification are required to submit:

(1) A Contractor's Application with data
(2) A Contractor's financial statement
(3) A completed Contractor's Experience Questionnaire
(4) A Facilities and Equipment list

They must be filed with the Contractor's Qualification Committee not less than thirty days prior to the opening date specified in the proposal.

A qualified contractor is one whose financial rating and classification has been determined by the Contractor's Qualification Committee and ratified and confirmed by the Board of Estimates.

All contractors must submit an affirmative action plan and agree to comply with laws and regulations governing business relations with the City including requirements covering anti-discrimination, civil rights and minimum wage rates.

An accountant's certificate must accompany the financial report and must be executed by a certified public accountant, of any state, in order for a contractor to be pre-qualified to bid on, or subcontract for, work estimated at $1,000,000 or more.

The Board of Estimates reserves the right to reject the bid of any bidder who fails to furnish, promptly and properly, all the information required as aforesaid, when notified to do so.

Each bidder shall further qualify as otherwise specified in the Contract Documents.

A prospective bidder may purchase plans if his pre-qualification papers have been submitted at least thirty days prior to the opening date specified in the proposal. Material suppliers and other interested parties may obtain plans and proposals without filing a pre-qualification application. The proposals shall be marked **"not for bidding purposes".**

GENERAL PROVISIONS – SECTION 3

AWARD AND EXECUTION OF CONTRACT

GP-3.01 AWARD OF CONTRACT (SEE GP-SECTION 2.19)

Written Notice of Award shall be sent to the successful bidder. A Notice of Award may be rescinded at any time prior to execution of the Contract by Board of Estimates.

GP-3.02 RETURN OF PROPOSAL GUARANTY

The checks of the unsuccessful bidders shall be returned to them within a reasonable time after opening the bids and awarding the Contract to the successful bidder. Upon the proper execution of the Contract, bond, and the furnishing of all required insurance policies, the check of the successful bidder will be returned to him. In the case of bid checks of less than $5,000, which have been deposited by the City, reimbursement will be made by the City in the amount of said check, as indicated above.

GP-3.03 PERFORMANCE BOND AND PAYMENT BOND REQUIREMENTS

(a) The successful bidder will be required to give a Performance Bond and a Payment Bond of a surety company to be approved by the Mayor of Baltimore City, doing business in the City of Baltimore, State of Maryland within ten days after the date of award of the Contract. The Performance Bond shall be in an amount not less than the Contract Price and the Payment Bond shall be in the amount of the Contract Price, as indicated on the form attached to the proposal forms and made a part of the Contract Documents.

(b) Whenever the surety or sureties on the bonds furnished in accordance with the preceding paragraph shall be deemed by the Mayor and City Council to be insufficient or unsatisfactory, he may, at his discretion, within ten days after notice to that effect is mailed to the address of the Contractor, require the Contractor to furnish and deliver new bonds to the Mayor and City Council of Baltimore in the same penalty and on the same conditions, with surety satisfactory to the Mayor and City Council. This duty shall continue on the part of the Contractor whenever and so often as the Mayor and City Council shall require new bonds with a satisfactory surety or sureties. Upon failure of the Contractor to furnish the aforesaid new bonds with ten days after said notice is mailed to his address, the Mayor and City Council of Baltimore, through their proper agent or agents, may withhold all payments due to the Contractor and re-let the unfinished work at the expense of the Contractor, in any manner which it may deem best, to protect the interest of the City.

GP-3.04 EXECUTION OF CONTRACT

(a) The Contract shall be effective only upon receipt by the City of the proper, executed Contract form, Performance and Payment Bonds and execution of the Contract by the City.

(b) After a Notice of Award, as provided in **GP-3.01,** has been issued to a bidder, the City shall forward the formal Contract form and the appropriate forms for the Payment and Performance Bonds to the bidder for execution. The bidder will execute the Contract form and return same, together with fully executed Payment and Performance Bonds to the City within 10 days after receipt of same. After receipt of the properly executed Contract form and Payment and Performance Bonds, the City will execute the Contract within 60 days and forward the bidder a copy; provided, however, that the Board of Estimates has approved the Contract , if such approval is required.

GP-3.05 FAILURE TO EXECUTE CONTRACT

Failure of the Bidder to execute the Contract and file acceptable security as defined in **GP-3.03** within the time allowed shall be just cause for the annulment of the award and the forfeiture of the proposal guaranty, which shall become the property of the City, not as a penalty, but in liquidation of damages sustained. Award may then be made to the next lowest responsive, responsible bidder or the work may be re-advertised and constructed under contract, or otherwise, as the City may decide.

GENERAL PROVISIONS – SECTION 4

SCOPE OF WORK

GP-4.01 INTENT OF CONTRACT

(a) The Contractor shall (within specified tolerances) perform all work in accordance with the lines, grades, typical Cross sections, dimensions and other data shown on the Plans, or as modified by written orders, including the furnishing of all materials, implements, machinery, equipment, tools, supplies, transportation, labor, and all other things necessary to the satisfactory prosecution and completion of the project in full compliance with the Contract requirements.

(b) The documents composing the Contract Documents are intended to be complementary and to describe the construction and completion of the work. Anything mentioned in the Specifications and not shown on the Contract Drawings, or shown on the Contract Drawings and not mentioned in the Specifications, shall be of like effect as if shown in both.

(c) Omissions from the Drawings or Specifications or the misdescription of details of work which are manifestly necessary to carry out the intent of the Drawings and Specifications, which are customarily performed, shall not relieve the Contractor from performing such omitted or misdescribed details or work. They shall be performed as if fully and correctly set forth and described in the Drawings and Specifications.

GP-4.02 GENERAL PROVISIONS CONTROLLING

In the event of a conflict between the General Provisions and any other provision of the Contract Documents, the General Provisions shall prevail unless such other provision expressly provides to the contrary.

GP-4.03 ENTIRE CONTRACT

The Contract Documents represent the entire and integrated agreement between the parties hereto and supersede all prior negotiations, representations or agreements, either written or oral.

GP-4.04 VARIATIONS IN ESTIMATED QUANTITIES

Where the quantity of a pay item in the Contract is an estimated quantity, and where the actual quantity of such pay item varies more than 25% from the estimated quantity stated in the Contract, an equitable adjustment in the Contract Price shall be made upon demand of either party. The equitable adjustment shall be based upon any increase or decrease in costs due solely to the variation above 125% or below 75% of the estimated quantity. If the quantity variation causes an increase in the time necessary for completion, the Engineer shall, upon receipt of a written request for an extension of time within ten days from the beginning of the delay, or within a further period of time which may be granted by the Engineer before the date of final settlement of the Contract, ascertain the facts and make an adjustment to extend the Completion Date if in his judgment , the findings justify.

GP-4.05 DIFFERING SITE CONDITIONS

(a) The contractor shall promptly, and before such conditions are disturbed, notify the Engineer in writing of:

(1) Subsurface or latent physical conditions at the site differing materially from those indicated in the Contract Documents or;

(2) Physical conditions of an unusual nature at the site, differing materially from those ordinarily encountered and generally recognized as inherent in work of the character provided for this Contract. The Engineer shall promptly investigate the conditions, and if he finds that such conditions do materially differ and cause a change in the Contractor's cost or the time required for performance of any part of the work

under the Contract (whether or not changed as result of such conditions), an equitable adjustment shall be made and the Contract accordingly modified in writing.

(b) No claim of the Contractor under this clause shall be allowed unless the Contractor has given the notice required in (a) above, provided however, the time prescribe therefor may be extended by the City or State.

(c) No claim by the Contractor for an equitable adjustment hereunder shall be allowed if asserted after final payment under this Contract.

GP-4.06 CHANGES

(a) The Engineer may, at any time and without notice to the sureties, if any, by written order designated or indicated to be a Change order, make any change in the work within the general scope of the Contract, including but not limited to changes:

(1) In the Specifications (including drawings and design)
(2) In the method or manner of performance of the work
(3) In the City-furnished facilities, equipment, materials, services or site, or
(4) Directing acceleration in the performance of the work

(b) Any other written or oral order from the Engineer whose terms, as used in this Paragraph **(b)**, shall include direction, instruction, interpretation or determination which causes any such change, shall be treated as a Change Order under this clause, provided that the Contractor gives the Engineer written notice stating the date, circumstances and source of the order and that the Contractor regards the order as a Change Order.

(c) Except as provided above, no order, statement, or conduct of the Engineer shall be treated as a change under this clause or entitle the Contractor to an equitable adjustment hereunder.

(d) If any change under this clause causes an increase or decrease in the Contractor's cost of, or the time required for, the performance of any part of the work under the Contract, whether or not changed by any order, an equitable adjustment shall be made and the Contract modified, in writing, accordingly; provided however, that except for claims based on effective Specifications, no claim for any change under **(b)** above, shall be allowed for any costs incurred more than 20 days before the Contractor gives written notice as therein required; and provided further, that in the case of defective Specifications for which the State is responsible, the equitable adjustment shall include any increased cost reasonably incurred by the Contractor in attempting to comply with such defective Specifications.

(e) If the Contractor intends to assert a claim for an equitable adjustment under this clause, he shall, within 30 days after receipt of a written Change Order under **(a)** above, or the furnishings of written notice under **(b)** above, submit a written statement to the Engineer, setting for the general nature and monetary extent of such claim, unless this period is extended by the City/State. The statement of claim hereunder may be included in the notice under **(b)**, above.

(f) No claim by the Contractor for an equitable adjustment hereunder shall be allowed if asserted after Final Payment under the Contract.

GP-4.07 NEGOTIATED PAYMENT PROVISION

If the Contractor is entitled to an equitable adjustment, the Contractor shall be allowed to add the following maximum percentages for overhead and profit to his costs for labor and materials:

(a) Twenty percent may be added by the Contractor for overhead and profit for work performed by his own forces.

(b) Fifteen percent may be added by the subcontractor for overhead and profit work performed by the subcontractor. The Contractor may add an additional 5% of the subcontractor's costs for labor and material.

The provisions of paragraphs **(a)** and **(b)** above apply only to price adjustments negotiated prior to completion of the added or changed work and do not apply to work performed on Force Account Work, as provided in **GP-9.02**, OR Variations in Estimated Quantities as provided in **GP-4.04.**

GP-4.08 UNAUTHORIZED WORK

Work done contrary to, or regardless of, the instructions of the Engineer; work done beyond the lines and grades shown on the Contract Drawings, or as given; or any extra work done without written authority, will be considered as unauthorized and at the expense of the Contractor and will not be measured or paid for. Work so done may be ordered removed and replaced at the Contractor's expense.

GP-4.09 FINAL CLEANUP

Upon completion of the work specified in the Contract and before Final Payment will be made, the construction area and all other areas occupied by the Contractor during the construction of the Contract, other than those owned by him, shall be cleaned of all surplus and discarded materials, spilled materials, excess materials left deposited on the permanent work as a result of the Contractor's operations, false work, rubbish and temporary structures and buildings that were placed thereon by the Contractor. The areas mentioned above, outside the normal pay limits for seeding, will be reshaped, seeded and mulched, or otherwise restored as directed by the Engineer, at the Contractor's expense.

GP-4.10 (RESERVED)

GENERAL PROVISIONS – SECTION 5

CONTROL OF THE WORK

GP-5.01 AUTHORITY OF THE ENGINEER

(a) The Engineer shall decide all questions which may arise as to the quality and acceptability of materials furnished and work performed, as to the rate of progress of the work, all questions which may arise as to the interpretation of any or all Plans and Specifications, and all questions as to the acceptable fulfillment of the Contract by the Contractor.

(b) The Engineer shall determine the amount and quantity of work performed and materials which are to be paid for under the Contract.

(c) The Engineer shall have the authority to suspend the work, wholly or in part, due to the failure of the Contractor to carry out provisions of the Contract.

GP-5.02 CONFORMITY WITH CONTRACT REQUIREMENTS

All work performed and all materials furnished shall be in conformance with the Contract requirements.

If the Engineer finds the materials or the finished product in which the materials are used, or the work performed, are not in reasonably close conformance with the Contract requirements and have resulted in an inferior or unsatisfactory product, the work or materials shall be removed and replaced, or otherwise corrected, by and at the expense of the Contractor.

If the Engineer finds the materials or the finished product in which the materials are used are not in conformity with the Contract requirements but that acceptable work has been produced, he shall make a determination if the works shall be accepted. The Engineer will document the basis of acceptance by a Change Order which will provide for an appropriate adjustment in the Contract price. Any action taken pursuant to this paragraph may not result in an increase to the Contract price.

GP-5.03 DISCREPANCIES IN THE CONTRACT DOCUMENTS

If the Contractor discovers any discrepancies in the Contract Documents, he shall immediately notify the Engineer. The Engineer will make such corrections and interpretations as may be necessary for fulfilling the intent of the Contract.

GP-5.04 COOPERATION BY CONTRACTOR

The Contractor will keep one complete set of Contract Documents on the project site at all times.

The Contractor shall give the work the constant attention necessary to facilitate the progress thereof and shall cooperate with the Engineer and his inspectors in every way possible.

The Contractor shall assign to the Contract, as his agent, a competent superintendent capable of communicating in English, capable of reading and thoroughly understanding the Contract Documents and thoroughly experienced in the type of work being performed, who shall receive instructions from the Engineer or his authorized representatives. The superintendent shall have full authority to execute the order or directions of the engineer without delay and to promptly supply such materials, equipment, tools, labor and incidentals as may be required. This superintendence shall be furnished irrespective of the amount of work sublet. The superintendent shall be on the project site at all times when the work is in progress.

GP-5.05 COOPERATION WITH UTILITIES

Where an existing utility is encountered which is not indicated or which is determined to be a different utility than that indicated, the Contractor shall promptly notify the Engineer who will determine the owner of the utility and its disposition. Utilities which are relocated by the utility company for the convenience of the Contractor shall be relocated at the sole expense of the Contractor.

It is understood and agreed that the Contractor has considered in his bid all of the permanent and temporary utility appurtenances in their present or relocated positions and that no additional compensation will be allowed for delays, inconvenience or damage sustained by him due to any interference from the utility appurtenances or the operation of moving them.

The Contractor shall have responsibility for notifying all affected utility companies prior to the need for performing any work on their utilities and shall cooperate with them in achieving the desired result. All damage to utilities caused by the Contractor's operations shall be the responsibility of the Contractor.

The Contractor's attention is directed to Sections **GP-7.11, GP-7.13** and **GP-7.17** of the Specifications regarding utilities.

The Contractor shall take into consideration the adjustment and relocation of installations by public utilities in areas within the limits of the Contract. The Contractor's attention is directed to utility work as described elsewhere in the Special Provisions.

Existing utilities have been generally located and shown on the Plans as they are believed to exist and have been determined with the best accuracy attainable from available record drawings and field surveys of visible surface features and accessible vaults, manholes, inlets and associated structures. However, the City, Administration and the Baltimore City, Department of Transportation assume no responsibility for the accuracy of the locations or completeness of the information. The Contractor will be responsible for locating all existing utilities, the safety of same and shall make good, at his own expense, any damage due to his operations. The Contractor shall also be responsible for coordinating his work with the work that others may be doing on utilities.

The existence of drains and utilities other than those shown on the Contract Plans is not known. If, during approved construction operations, the Contractor should encounter additional drains or utilities, he shall immediately notify the Engineer and take all necessary and proper steps to protect the continuance of service of such drains and utilities.

All existing drains and utilities not shown to be abandoned under this Contract shall be maintained in service throughout the life of the Contract.

All private utility work will be performed by the utility company or agency owning or operating the utility lines, except for work specifically shown on the Plans or included in this project.

The contractor's contacts with all privately owned utility companies and with the city bureaus and departments having jurisdiction over the various types of utilities affected by the Contract will be through the Engineer. The contractor is responsible for coordinating his work progressively with that of the various city utility forces and with that of privately owned utility companies making changes in their facilities, all with the approval of the Engineer, in such a manner that uninterrupted service is maintained.

The Contractor's attention is directed to the fact that he must, before starting any construction operations and after the completion of all placement and compaction of aggregate, notify the Baltimore Gas and Electric Company at (410) 234-7281 in order to allow them to conduct a gas leak survey. This notice must be given to BGE three (3) days in advance.

The Contractor must be on the job site to meet Baltimore Gas and Electric Company representative, where utilities are to be marked.

The Contractor shall notify the Engineer, in writing, at least fourteen working days in advance of the time he plans to work on any specified utility relocation, in order to provide time for the Engineer to contact the City office, department, bureau, agency or privately-owned company having interest in, or jurisdiction over, the utility in question. In general, privately-owned utility companies will relocate their own facilities, whether located on private property outside the right-of-way, on rights-of-way acquired by the city, or in the beds of the City streets.

Presentation of the information shown on the Plans will not relieve the Contractor of his obligation to support and protect all utilities and structures encountered during the construction of the project and to make good for damages done to said utilities and structures to the total satisfaction of the Engineer.

The Contractor shall exercise caution when excavating and pile driving in the vicinity of utilities and shall notify the Engineer prior to beginning work near utilities. The Contractor must notify, through the Engineer, all private utilities ten days in advance at:

Miss Utility Phone: 1-800-257-7777

After location marking has been performed by the Public Service Companies and before beginning excavation operations, the Contractor shall verify the actual location of the underground utilities by means of Test Pits, as specified in Section 205 of the Specifications, if required by the Engineer. Prior to digging the Test Pits, the Contractor shall notify the Engineer, who will advise the related utility owner.

If any utility adjustments, either permanent or temporary, are necessary and are not specifically provided for in the Bid Documents, they will be done by the owners of the utilities. The Contractor shall cooperate to the fullest possible extent in such work.

No additional compensation will be allowed the Contractor for interruptions, special scheduling, changes in construction sequences, stage construction or changes in types of equipment used or made necessary by others performing work in connection with utilities.

The Contractor's attention is directed to the fact that there will be no additional compensation for service fees charged for marking and locating existing utilities. Any expenses likely to be insured by the Contractor as a result of such work, as well as cooperation with the owner's adjustments, shall be included in the Contract prices bid for the several pay items in the Proposal.

The Contractor shall exercise special care and caution in order to protect existing conduit. The Contractor shall not run heavy equipment over the existing lines and no materials are to be stored or placed over the lines.

When an adjustment is required to existing facilities, it is necessary that the existing facilities remain in service until such time as the adjustment is complete and placed in service. Also, when adjustments are required, scheduling shall be coordinated with the utility owners involved, to avoid any delay in the project.
The Contractor shall permit free and clear access to the various affected facilities by personnel of the utility owners for the purpose of inspection, maintenance, providing for additional service requirements and the construction of new facilities.

When personnel of the utility owners' outside party are working within the Limits of Work to be performed by the Contractor, the Contractor will not be relieved of his responsibility to prevent negligence on the part of his employees or agents. He shall be responsible for the maintenance and protection of the facilities, as provided under the Contract.

Work performed or furnished by any of the utility companies or agencies for the Contractor's convenience shall be paid for by the Contractor.

Prior to adjusting any Verizon manhole frames and covers, the Contractor shall notify through the Engineer, Verizon Telephone Company, 24 hours in advance, by calling David Kunert or Mike Ferguson at (410) 597-8585 so that they can be present during the adjustment of the manhole frames and covers.

Where directed by the Engineer, existing pavement shall be cut along neat lines to perform the work.

Broken pavement and excess material shall be removed and disposed of in accordance with Section 206 of the Specifications.

All excavations and trenches shall be plated at the end of each workday and **"STEEL PLATES AHEAD"** warning signs displayed in advance. All Steel Plates that are installed as per **BC-576.17** must be clearly marked so that ownership is easily discernable.

The cost of materials, installation, removal and any welding which may be directed by the Engineer for the use of Temporary Steel Plate, as shown on Standard BC-576.17, will not be measured and paid for separately, but the cost thereof, shall be included in the priced bid in the Proposal for the Maintenance of Traffic.

The Contractor will not connect to any live electric or communication circuit of a Privately Owned Utility Company or with any City Utility Line, without specific **WRITTEN NOTIFICATION**.

Existing street lighting will remain in service until new lighting is installed and the removal and replacement of any lights for the Contractor's convenience, will be at the Contractor's expense.

GP-5.06 COOPERATION BETWEEN CONTRACTORS AND LOCATIONS

(a) Separate contractors on adjoining or overlapping work shall be cooperative with each other as necessary. Such cooperation shall include:

(1) Arrangement and conduct of work

(2) Storage and disposal of materials, etc., by each in such a manner so as to not interfere with or hinder the progress of the work being performed by other contractors. Contiguous work shall be joined in an acceptable manner.

(b) The Administration, the City and Baltimore City Department of Transportation, shall have the right, at any time, to contract for and perform other work on, near, over or under the work covered by this Contract. If a dispute arises among contractors, the Director, Department of Transportation, will decide which of the Engineers will have jurisdiction over said dispute. The contractor shall cooperate fully with such other contractors and carefully fit his own work to such other work as may be directed by the Engineer.

(c) The Contractor agrees that in the event of dispute as to cooperation, the Engineer will act as referee. The contractor agrees to make no claims against the Administration or City for any inconvenience, delay or loss experienced by him because of the presence and operations of other contractors.

GP-5.07 AUTHORITY AND DUTIES OF INSPECTORS

Inspectors shall be authorized to inspect all work done and all material furnished. Inspection may extend to all or any part of the work and to the preparation, fabrication or manufacture of the materials to be used. The Inspector is not authorized to revoke, alter or waive any requirements of the Contractor, nor is he authorized to approve or accept any portion of the complete project. He is authorized to call the attention of the Contractor to any failure of the work or materials to conform to the Contract. He shall have the authority to reject materials or suspend the work until any questions at issue can be referred to and decided by the Engineer.

Inspectors shall perform their duties at such times and in such manner as will not unnecessarily impede progress on the Contract.

Inspectors shall in no case act as foremen or perform other duties for the Contractor, nor interfere with the management of the work by the latter. Any advice which the Inspector may give the Contractor shall not be construed as binding the Engineer in any way or releasing the Contractor from fulfilling all of the terms of the Contract.

Where there is disagreement between the Contractor or (his representative) and the Inspector, such as refusal by the Contractor to use properly approved material, performing work not in compliance with Plans and Specifications or refusing to suspend work until problems at issue can be referred to and decided by the Engineer, the inspector will immediately direct the Engineer's attention to the issues of disagreement. If the Contractor still refuses to make corrections, comply, or suspend work, the Engineer will prepare and deliver in writing to the Contractor, by mail or otherwise, an order suspending the work and explaining the reason for such shutdown. As soon as the Inspector is advised of the delivery of the shutdown order, the Inspector shall leave the site of the work. Any work performed during the inspector's absence will not be accepted or paid for and may be required to be removed and disposed of at the Contractor's expense. On local jurisdiction projects, the local jurisdiction representatives will be authorized to suspend work under the above noted conditions. It will be his responsibility to immediately notify the Chief Inspector, Department of Transportation of non-compliance with the Plans and Specifications.

GP-5.08 INSPECTION OF WORK

All materials and each part of detail of the work shall be subject, at all times, to inspection by the Engineer or his authorized representative. The Contractor will be held strictly to the materials, workmanship, and the diligent execution of the Contract. The inspection may include mill, plant or shop inspection. Any material furnished under the Contract is subject to inspection. The Engineer, or his representative, shall be allowed access to all parts of the work and shall be furnished with such information and assistance by the Contractor as is required to make a complete and detailed inspection.

The Contractor, at any time before acceptance of the work, shall remove or uncover portions of the finished work for inspection as may be directed by the Engineer. After examination, the Contractor shall restore said portions of the work to the standards required by the contract. Should the work exposed or examined prove acceptable, adjustments in Contract time and price will be made pursuant to Section **GP-4.06** for the uncovering or removing, and the replacing of the covering or making good of the parts removed. Should the work so exposed or examined prove unacceptable, the uncovering, or removing and replacing, shall be at the Contractor's expense.

When the United States Government or any railroad, corporation or other agency, is to pay a portion of the cost of the work covered by the Contract, their respective representatives shall have the right to inspect the work.

GP-5.09 REMOVAL OF DEFECTIVE WORK

All work and materials which do not conform to the requirements of the contract will be considered unacceptable unless otherwise determined acceptable under the provisions of **GP-5.02.**

Any defective work, whether the result of poor workmanship, use of defective materials, damage through carelessness, or any other cause-found to exist shall be removed and replaced by work and materials which shall conform to the Specifications or shall be remedied in an acceptable manner authorized by the Engineer.

Upon failure of the Contractor to comply promptly with any order of the Engineer made under these provisions, the engineer shall have authority to have defective work remedied or removed and replaced, and unauthorized work to be removed and to deduct the costs from any monies due or to become due the Contractor under the Contract.

GP-5.10 LOAD RESTRICTIONS

(a) The Contractor shall comply with all State and local requirements pertaining to speed, size and weight of motor vehicles.

(b) The City may indicate load restrictions in the Contract on any road structure within the vicinity of the project.

(c) The Contractor shall take into account any and all posted bridges, the crossing of which might be contemplated by the work on the Contract. No loads in excess of posted limits will be allowed in the prosecution of the work on any Contract unless required permits are obtained from the appropriate State and local governmental agencies.

(d) The Contractor shall consider possible detrimental effects of operating heavy paving and grading equipment adjacent to retaining walls, pipe culverts, arches, forms for concrete work, as well as construction existing prior to this Contract.

(e) The Engineer shall have the right to limit passage of heavy equipment (plus loads) when such passage or usage is causing apparent or visible damage to embankments, paving, structures or any other property.

(f) Within the Baltimore City limits, the Traffic Division of Baltimore City Department of Transportation has jurisdiction for oversize and overweight vehicle movement. Permits are obtainable from the Traffic Division.

GP-5.11 MAINTENANCE OF WORK DURING CONSTRUCTION

(a) The Contractor shall maintain the work during construction and until acceptance. Maintenance shall constitute continuous and effective work prosecution with adequate equipment and forces, to the end that all parts of the work be kept in satisfactory condition at all times.

(b) Particular attention shall be given to drainage, both permanent and temporary. The Contractor shall use all reasonable precautionary measures to avoid damage or loss that might result from accumulations and concentrations of drainage water and material carried by such water. Drainage shall be diverted or redirected, when necessary, to prevent damage to excavation, embankments, surfacing, structures of property. Suitable measures shall be taken by the Contractor to prevent the erosion of soil in all construction areas where the existing ground cover has been removed.

(c) All cost of maintenance work during construction and before final acceptance shall be included in the price bid and the Contractor will not be paid an additional amount for such work, except as otherwise provided.

(d) In the event that the Contractor's work is ordered shut down for failure to comply with the provisions of the Contract, the Contractor shall maintain the entire project as provided herein, and provide ingress and egress for local residents or tenants adjacent to the project site, for tenants of the project site and for the general public as may be necessary during the period of suspended work or until the Contract has been declared in default.

(e) On projects where traffic flow is maintained, the Contractor shall be responsible for repair of all traffic damages to work either partially or totally completed until such time as the work is accepted by the Engineer. Responsible, as used here, shall mean the responsibility for restoration and the cost thereof, unless otherwise expressly provided for in the Special Provisions.

GP-5.12 FAILURE TO MAINTAIN ENTIRE PROJECT

Failure on the part of the contractor, at any time, to respond to the provisions of GP-5.11, will result in the Engineer immediately notifying the Contractor to comply with required maintenance provisions. In the event that the Contractor fails to proceed with corrections to unsatisfactory maintenance so as to conform to the provisions of GP-5.11 within 4 hours after receipt of such notice, the Engineer may notify the Contractor to suspend all other work on the Contract until such time as the unsatisfactory maintenance is corrected. In the event that the contractor fails to respond to a notice of unsatisfactory maintenance within 4 hours after receipt of said notice, the Engineer will immediately proceed with adequate forces and equipment to maintain the project and the entire cost of this maintenance will be deducted from monies due the Contractor on the next monthly estimate.

An appropriate deduction will be made from the Contractor's next Progress Estimate for each day, or portion thereof, that Maintenance of Traffic deficiencies exist and will continue until the deficiencies are corrected and accepted by the Engineer. Any portion of a day will be considered a full day deduction. The deduction will be equal to a pro rata share of the Contractor's lump sum price bid for Maintenance of Traffic or $200.00 per day, whichever is more. The amount prorated will be the per diem amount established by using the Calendar Days (based upon Calendar Dates, when required divided into the total value of the bid item. The amount of monies deducted will be a permanent deduction and will not be recoverable. (After satisfactory correction of the deficiencies, payment of the Maintenance of Traffic lump sum item will resume.)

The above deduction will be assessed on the next Progress Estimate if the Contractor does not take action to correct the deficiencies and properly assume the responsibilities of maintaining the project (as determined by the Engineer) within four hours of receiving a notice to comply with the required Maintenance Provisions.

GP-5.13 ACCEPTANCE FOR MAINTENANCE

(a) Partial Acceptance for Maintenance. If at any time during the performance of the work the Contractor substantially completes a unit or portion of the work, he may request the Engineer to make final inspection of that unit. If the Engineer finds, upon inspection, that the unit has been completed in compliance with the Contract, he may accept that unit as being completed and the Contractor may be relieved of further responsibility for that unit. Generally, partial acceptance for maintenance will only be considered when the City feels that such action is in the public interest. Partial acceptance shall in no way void or alter any of the items of the Contract.

(b) Acceptance for Maintenance. Upon due notice from the contractor of presumptive completion of the entire project, the Engineer shall make an inspection. If all construction stipulated in or provided for by the Contract is found to gave been completed, such inspection shall constitute the Final inspection, the Engineer shall make the acceptance as of that date, and the Contractor shall be notified of such acceptance in writing. After acceptance, the City will assume responsibility for maintenance except where otherwise provided by the Contract.

(c) If, during any construction inspection, any work in whole or in part is found unsatisfactory, the Engineer shall make the Contractor aware of that work which is unsatisfactory and what will be required for final completion and acceptance for maintenance. The contractor shall, without delay, comply with and execute the Engineer's instructions. Upon completion of the work another inspection shall be made which shall constitute the Final Inspection if the work is then found to be satisfactory. In such event, the Engineer shall make the final acceptance and the Contractor shall be so notified. After final acceptance for maintenance, the City will assume responsibility for maintenance except where otherwise provided by the Contract.

(d) Unless otherwise provided in the Contract, acceptance by the City shall be made as promptly as practicable after completion and inspection of all work required by the Contract or that portion of the work that the Engineer determines can be accepted separately. Acceptance shall be final and conclusive except as regards latent defects, fraud, such gross mistakes as may amount to fraud, or the City's rights under any warranty or guarantee, or any claims or counterclaims reserved by the City.

GP-5.14 AND GP-5.15 CLAIM AND DISPUTE

1. PROMPT NOTICE OF CLAIM OR DISPUTE

(a.) Should the Contractor be of the opinion, at any time, that he is entitled to any additional contract time and/or compensation whatsoever exceeding the compensation stipulated in the Contract Documents in the form of damages, losses, costs and/or expenses, alleged to have been sustained, suffered or incurred by him in connection with the project, he shall in each instance request this fact to be entered on the project daily logs and within ten (10) calendar days thereafter shall file a written notice of the claim with the Engineer. Within thirty (30) days after this work is completed, the Contractor shall file a written itemized statement of the details and amount of each such claim of time, damage, loss, cost and/or expenses, and unless such notice, claim and statement shall be thus made and filed, in each instance, the Contractor's claim for such additional time and/or compensation shall be held and taken to be invalidated, and he shall not be entitled to any compensation whatsoever on account of such alleged claim of time, damage, loss, cost and/or expense. Reasonable extension of this thirty (30) calendar day period may be granted by the Engineer upon receipt of a request for such extension from the Contractor, accompanied by proof of his inability to obtain statements and/or other details due to circumstances beyond his control.

(b.) The conditions of this section shall be held and taken to constitute a condition precedent to the right of the Contractor to recover. They shall also apply to all claims by the Contractor in any way relating to the complete Project, even though claims and or work involved may be regarded as "outside the Contract."

(c.) It is further understood and agreed, however, that nothing in this section shall be held or taken to enlarge in any way the rights of the Contractor or the obligations of the City under the Contract Documents.

2. INITIAL REVIEW OF CLAIM OR DISPUTE

(a.) The Inspector assigned to the Project, the Project Manager, and the Division Chief of Construction Management (and/or any individual or entity designated by the Chief) shall each review the substance of the said claim and may request additional information from the Contractor.

(b.) Where appropriate the Division Chief may resolve the claim through negotiation.

(c.) The Division Chief may resolve the claim in whole or in part; or deny the claim in whole or in part. (d) Any claims that are denied in whole or in part, unless otherwise waived by the Contractor, may be appealed in writing by the Contractor to the Director, Department of Transportation within thirty (30) days.

3. REVIEW BY DIRECTOR OF THE DEPARTMENT OF TRANSPORTATION

(a.) Claims and/or disputes appealed to the Director, Department of Transportation shall be reviewed and resolved in a timely manner, which shall depend upon the complexity and circumstances of the claim(s).
(b.) The Director shall have all of the authority and powers to settle disputes that are enjoyed by the Division Chief to resolve the matter. Disputes and/or claims that are not resolved and/or settled by the Director of the Department of Transportation to the satisfaction of the Contractor, may be reserved by the Contractor for Final Review by the Director, Department of Public Works by giving written notification to the Director within thirty (30)days of the Decision of the Director of the Department of Transportation.

4. REVIEW BY THE DIRECTOR OF PUBLIC WORKS

(a.) The Director of Public Works shall act as the Hearing Officer and shall hold one (1) Administrative Hearing on the record at the conclusion of the work on the contract to resolve any and all claims and/or disputes which have been appealed to the Director, pursuant to these procedures.
(b.) The cost of transcription shall be borne equally among the parties.
(c.) The Decision of the Director is Final and Conclusive, but is subject to review on the record by a court of competent jurisdiction pursuant to the Baltimore City Charter.

GP-5.16 CONSTRUCTION NOISE ABATEMENT MEASURES

The Contractor shall comply with all federal, state and local noise control rules, regulations and ordinances which apply to work performed pursuant to the Contract and shall take such noise abatement measures that are necessary consisting of, but not limited to, the following:

(a) Each internal combustion engine, used for any purpose on the job, or related to the job, shall be equipped with a properly operating muffler of a type recommended by the manufacturer. No internal combustion engine shall be operated on the project without a muffler.

(b) Maintenance of equipment to insure that noise is kept to a minimum.

(c) Conducting truck loading, unloading and hauling operations so that noise is kept to a minimum.

(d) Routing of construction equipment and vehicles carrying spoil, concrete or other materials over the streets that will cause the least disturbance to residents in the vicinity of the work. The Engineer shall be advised in writing of the proposed haul routes prior to the Contractor securing a permit from the City of Baltimore, if a permit is required.

(e) Limiting of pile-driving to hours between 8:00 am. and 6:00 p.m.

(f) Placing or continuously operating diesel-powered equipment such as compressors and generators, in areas far from, or shielded from, noise-sensitive locations.

(g) In cases where construction equipment is readily available which meets new equipment noise emission level standards provided by the Environmental Protection Agency, the Contractor shall be required to utilize only equipment meeting those standards on the project.

(h) No operating hoisting or other steam engines, or other work of a noisy character, will be permitted between the hours of 11:00 p.m. and 7:00 a.m., except in case of emergency, and then only with the consent of the Engineer and to such extent as he may judge to be necessary, unless otherwise stated in the Special Provisions.

GP-5.17 ACCIDENTS

(a) The Contractor shall provide equipment and medical facilities at the site as necessary to supply first aid services to anyone who may be injured in connection with the work.

(b) The Contractor shall report all accidents whatsoever arising out of, or in connection with, the performance of the work, whether on or adjacent to the site, which cause death, personal injury or property damages, in writing to the Engineer, giving full details and statements of witnesses. In addition, if death, serious injuries or damages occur, the accident shall be reported immediately, by telephone or messenger or both, to the Engineer.

(c) If any claim is made against the Contractor on account of any accident as a result of the work, the Contractor shall promptly report the facts in writing to the Engineer, giving full details

GP-5.18 MAINTAINING FLOW OF SEWERS AND DRAINS

The Contractor shall, at his own cost and expense, provide for and maintain the flow of all sewers, drains, house or inlet connections and all water courses which may be met with during the progress of the work. He shall not allow the contents of any sewer, drain, house, o r inlet connection to flow into the trenches or the drains to be constructed under the Contract, except where written permission is given by the Engineer and shall, at his own cost and expense,

immediately remove all offensive matter from the proximity of the work, using precautions in so doing, as may be directed by the Engineer.

GP-5.19 ADJACENT BUILDINGS AND PROPERTY

It shall be the Contractor's responsibility to support and protect all buildings and property on or adjacent to the project site against settlement and damage during construction operations by adequate shoring, bracing, sheeting, etc., acceptable to the Engineer. In case of any settlement or damage to buildings or property, the Contractor shall, at his own cost and expense, restore the buildings and property to a condition equal to that which existed before damage was incurred.

GENERAL PROVISIONS – SECTION 6
CONTROL OF MATERIAL

GP-6.01 GENERAL

All materials shall meet all quality requirements of the Contract. In order to expedite the inspection and testing of the materials, the Contractor shall notify the Engineer, in writing, of the sources from which he proposes to obtain all materials requiring approval, testing, inspection, or certification prior to incorporation into the work, as soon as possible after receipt of Notice of Award of the Contract.

GP-6.02 STORAGE AND HANDLING OF MATERIALS

Materials shall be stored as to assure the preservation of their quality and acceptability for the work. Stored materials, even though approved before storage, may again be inspected prior to their use in the work. Stored materials shall be located as to facilitate their prompt inspection.

Approved portions of the right-of-way or project site may be used for storage purposes and for the placing of the Contractor's plant and equipment. Such storage areas must be restored to their original condition by the Contractor at his expense. Any additional space required must be provided by the Contractor at his expense.

Approval for off-site storage and partial payment for large fabricated items may be allowed if the criteria set forth in **GP-9.01** and **TC-7.02** are met.

Contractor will not be allowed to park or store passenger vehicles, trucks and or other equipment or materials of any type within the limits of the traffic lanes being used to maintain traffic. During active work operations in any stage of construction, the contractor may be allowed to store/stockpile materials and park only those vehicles that are required for construction activities in areas exterior to barricaded, fenced-off areas. However, the occupying of such areas shall be to the extent permitted by the Engineer. All materials shall be stored in a neat and workman like manner.

GP-6.03 UNACCEPTABLE MATERIALS

(a) Materials represented by samples taken and tested in accordance with the specified tests and failing to meet required values shall be considered to be defective regardless of prior tests or approvals.

(b) Unless otherwise allowed by the Engineer as set forth below, defective materials will be removed from the site and any tags, stamps or other marking implying conformance with specifications shall be removed or obliterated.

(c) Where defects can be corrected, the Contractor may propose such corrective action as he deems appropriate to the Engineer. The Engineer may approve the corrective action but in so doing does not assume responsibility for the success thereof. Retests will be made to determine the acceptability of the material after corrective measures have been taken. No person other than the Engineer may change any provision of the Specifications or the Contract without written authorization.

(d) The cost of replacing, correcting or removal of defective material will be the responsibility of the Contractor.

(e) The cost of repairing or replacing other materials damaged by the installation, correcting or removal of defective materials will be the responsibility of the Contractor.

GP-6.04 CITY FURNISHED MATERIAL

The Contractor shall furnish all materials required to complete the work, except those specified to be furnished by the City. Materials furnished by the City will be delivered or made available to the Contractor at the point or points specified in the Special Provisions. The cost of handling and placing all materials after they are delivered to the Contractor shall be considered as included in the Contract price for the item for which they are used.

The Contractor will be held responsible for all materials delivered to him. Deductions will be made from any monies due him to make good any shortages and deficiencies, from any cause whatsoever, and for any damage which may occur after delivery and for any demurrage charges.

In cases where materials are supplied by the City and incorporated in the work by the Contractor, materials inspection and acceptance will not be a prerequisite for acceptance of the final product where the product pertains to these items.

GP-6.05 WATER SUPPLY

(a) Where water from the City water mains is available, it will be supplied to the Contractor at the nearest available hydrant or outlet and no other water shall be used for any purpose connected with the Contract. The Contractor shall procure a fire hydrant permit (City contracts) for a fee as established by the Bureau of Water and Wastewater, Utility Billing Division. All water supplied from hydrants for the construction of the project shall be free, except for the cost of the permit and required deposits. Water from sources other than hydrants under permit, for which the Contractor is billed by the City or any other supplier, will not be considered a pay item under the Contract and shall be incidental to the various other items for which it is used. Deposits, which do not earn interest, on equipment (fire hydrant wrench, $50.00; reducer cap and valve $50.00) are refundable when equipment is returned undamaged. No improper, wasteful or undue use of the water will be permitted.

(b) Where City water is not available, the Contractor shall, at his own cost and expense, provide such quantities of potable water as may be required for any and all purposes under the Contract. He shall supply sufficient drinking water to all his employees, but only from such sources as are approved by the Engineer and no other water shall be used for drinking purposes. Potable water is that meeting United States Public Standards.

GENERAL PROVISIONS – SECTION 7

LEGAL RELATIONS AND RESPONSIBILITY TO THE PUBLIC

GP-7.01 LAWS TO BE OBSERVED

(a) The Contractor shall keep fully informed of all federal, state and local laws, ordinances and regulations and all orders and decrees of bodies or tribunals having any jurisdiction or authority which in any manner affect those engaged or employed on the work, or which in any way affect the conduct of the work. He shall, at all times, observe and comply with all such laws, ordinances, regulations, orders and decrees; and shall protect and indemnify the City and State, their agencies and representatives against any claim or liability arising from or based on the violation of any law, ordinance, regulation, order, or decree, whether by himself or his employees or subcontractors.

(b) All requirements set forth in federal assistance instruments applicable to this Contract shall be satisfied.

GP-7.02 PERMITS AND LICENSES

(a) The Contractor shall procure, at his own expense, such permits and licenses, as may be necessary in order to comply with federal, State and local laws, ordinances and regulations in performance of the work. He shall give all notices necessary and incidental to the due and lawful prosecution of the work.

(b) Federal permits, from the U.S. Corps of Engineers, Environmental Protection Agency, and/or United States Coast Guard,, for erection of structures in tidal waters, will be obtained by the City. The Contractor shall comply with the requirements of such permits. Federal permits required by the Contractor for temporary structures such as docks, piers, anchorages, etc., must be applied for and obtained by the Contractor.

(c) Minimum Wage Rates, Equal Employment Opportunity Forms and any other permits or forms required in the Contract documents to be posted at the work site shall be posted at the Contractor's trailer.

GP-7.03 PATENTED DEVICES, MATERIALS AND PROCESSES

If the Contractor is required or desires to use any design, device, material or process covered by letters of patent or copyright he shall provide for such use by suitable legal agreement with the patentee or owner and a copy of such agreement shall be filed with the Director, Department of Transportation. If no such agreement is made or filed, the Contractor and the surety shall indemnify and save harmless the City, State, any affected third party, or political subdivision from any and all claims for infringement by reason of the use of such patented design, device, material, process, trademark or copyright, and shall indemnify, protect and save harmless the State and city, their agencies, officers, agents and employees with respect to any claim, action, cost or judgement for patent, trademark or copyright infringement, arising out of purchase or use of materials, construction, supplies, equipment or services covered by this Contract.

GP-7.04 FEDERAL PARTICIPATION

When the United States Government pays all or any portion of a project, the work shall be subject to the inspection of the appropriate federal agency. Such inspection shall in no sense make the Federal Government a party to this Contract, and will not interfere, in any way, with the rights of either party hereunder.

GP-7.05 CONSTRUCTION SAFETY AND HEALTH STANDARDS

It is a condition of the Contract, and shall be made a condition of each subcontract entered into pursuant to this Contract, that the Contractor and any subcontractor shall not require any laborer or mechanic employed in performance of the Contract to work in surroundings or under conditions which are unsanitary, hazardous, or dangerous to his health or safety, as determined under construction safety and health standards and regulations (Title 29, Code of Federal Regulations, Part 1926, formerly Part 1518, as revised from time to time) promulgated by the United States Secretary of Labor, in accordance with Section 107 of the Contract Work Hours and Safety Standard Act, (83 Stat.96) and under any construction safety and health standards and regulations promulgated by the Commissioner of Labor and Industry in accordance with the Maryland Occupational Safety and Health Act, Article 89, Sections 28 through 49A, inclusive, Annotated Code of Maryland (as the same may be amended from time to time).

The Contractor and each subcontractor shall permit inspection, without delay and at any reasonable time, on any premises where the work is being performed, by a federal or state inspector authorized to investigate compliance with federal and State statutes and regulations. The Contractor agrees to correct any violations found during such inspection within a reasonable time after the issuance of any citation, unless he contests the validity thereof through the appropriate administrative and judicial process.

GP-7.06 PUBLIC CONVENIENCE AND SAFETY

The Contractor shall conduct the work in such a manner as to ensure the least obstruction of traffic. The Contractor shall provide for the convenience and safety of the general public, tenants and of residents in the vicinity of the improvement. Equipment and materials stored or stockpiled within the project limits shall be placed so as not to be hazardous to the traveling public and as approved by the Engineer. Snow removal on public travelways shall be the responsibility of the applicable government agency unless travel is prohibited through the construction zone. (Refer to Section 104 for Maintenance of Traffic) Sprinkling shall be performed at the direction of the Engineer. The Contractor shall, unless otherwise specified, provide and maintain in a safe condition, temporary approaches to and crossings of the project. Existing City facilities, planned to be removed, but which might be of service to the public during construction, are not to be disturbed until other and adequate provisions are made. Existing mailboxes shall be maintained or reset in positions accessible to the public and to mail deliveries during construction and, subsequent to construction, shall be placed at their final locations in a satisfactory condition. On City facilities occupied by railroad tracks, temporary platforms for the entrance and exit of passengers to and from the railway cars be provided and maintained in an approved manner by the Contractor.

Fire hydrants on or adjacent to the project shall be kept accessible to fire apparatus at all times and no material or obstruction shall be placed within fifteen feet of any hydrant. Footways, gutters, sewer inlets and portions of the project adjoining the work under construction shall not be obstructed more than is absolutely necessary. Work closed down for the winter or at any other times shall be left entirely accessible to fire apparatus.

The Contractor shall properly and carefully shore up or otherwise support all live water, sewer and gas pipes, underground electric cables, conduits, freestanding walls, etc. which may be encountered. He shall immediately notify the Engineer of such and request permission to protect the same. The Contractor shall provide sufficient, safe and proper facilities at all times for the inspection of the work.

GP-7.07 DETOURS

Detours may be indicated in the Contract Documents. At the Contractor's request, traffic may be detoured over approved routes along existing roads, when acceptable to the Engineer. Detours over existing City or State roads will be designated by the appropriate agency(s). All other detours will be the responsibility of the Contractor.

GP-7.08 BARRICADES AND WARNING SIGNS

The Contractor shall provide, erect and maintain all necessary barricades, suitable and sufficient lights, danger signals, signs and other traffic control devices, and shall take all necessary precautions for the protection of the work and safety of the public. Highways and other City facilities closed to vehicular traffic shall be protected by effective barricades, and obstructions shall be illuminated during hours of darkness with electric lights.

The Contractor shall erect warning signs at location in advance of any place on the project where operations may interfere with the use of the facility by vehicular traffic and at all other points where the new work crosses or coincides with an existing roadway or traffic lane(s). Warning signs shall be constructed and erected in accordance with the MUTCD, or as directed.

The Contractor shall furnish, erect and maintain warning and direction signs in the number required and at locations designated by the Engineer, throughout the limits of the project. For street and highway type traffic, signs shall conform, in every respect, to the requirements of the MUTCD for Streets and Highways. Signs must be adequately reflectorized in accordance with their use. (Refer to Subsection 104.08) No work may be performed or begun unless an adequate number of signs of the proper category are in place.

In cases where the Contractor's sequence of operations results in grade differentials which would be hazardous to vehicular traffic, the Contractor will, at the direction of the Engineer, provide suitable, substantial traffic barriers to the extent determined by the Engineer.

GP-7.09 FLAGGING OF MOTOR VEHICLE TRAFFIC

For all construction contracts requiring the flagging of motor vehicles licensed for operation on the highways of Maryland, flagging using paddles shall be conducted as specified in the MUTCD for Streets and Highways.

GP-7.10 MAINTENANCE OF TRAFFIC

The Contractor shall notify the Superintendent of Parking, in Baltimore City , at least 72 hours prior to excavating any block of sidewalk where parking meters are located. In the notification, the Contractor should state the location, date and time the work will start in order to allow time for the Baltimore City, Department of Transportation to bag or remove the heads of the parking meters.

Traffic control shall be in accordance with Maryland Department of Transportation Standards and the MUTCD.

The Contractor shall maintain existing traffic control devices and fixtures at all times. Any change to the aforementioned must be approved by the Traffic Division (Maryland Vehicle Law, Section 21-206; Baltimore City Code, Article 31, Section 5).

The Contractor shall contact, through the Engineer, Mr. Matt Sosnowski of the Department of Transportation, telephone 443-984-2153, three (3) weeks before construction begins and two (2) weeks prior to any changes to the Maintenance of Traffic plans.

All open excavations must be covered at the end of each work day by steel plates. STEEL PLATES AHEAD warning signs must be displayed in advance. The Contractor shall notify, through the Engineer, Mr. Matt Sosnowski of the Department of Transportation, telephone 443-984-2153, two (2) weeks prior to beginning any stage of the work.

All removal and reinstallation of Traffic Signs and Posts shall be coordinated through Mr. Matt Sosnowski, telephone 443-984-2153, at least five (5) working days prior to beginning work necessitating these actions.

GP-7.11 PRESERVATION AND RESTORATION OF PROPERTY

(a) The Contractor shall not enter upon public property (outside of the right-of-way or project area) for any purpose without obtaining permission. He shall be responsible for the preservation of all public and private property, trees, monuments, signs, markers and fences thereon. He shall use every precaution necessary to prevent damage or injury thereto.

All Baltimore City Department of Transportation signs and markers that are affected by the work shall carefully be removed and delivered to the Engineer when grading operations begin. The Contractor shall take suitable precaution to prevent damage to underground or overhead public utility structures; shall protect all land monuments and property markers from disturbance or damage until the Engineer has referenced their location; and shall replace them when and as directed by the Engineer.

Work operations shall be conducted in such a manner as not to interfere with the activities on private property. The Contractor shall obtain permission to enter on private property from the property owner no less than two weeks prior to entering the property.

(b) The Contractor shall be held responsible for all damage or injury to property of any character during the prosecution of the work, resulting from any act, omission, neglect or misconduct in his manner or method of executing the work; or at any time due to defective work or materials. The Contractor shall not be released of the responsibility until the work shall have been completed and accepted. When or where any direct or indirect damage or injury is done to public or private property by or on account of any act, omission, neglect or misconduct in the execution of the work or in consequence of the non-execution thereof on the part of the Contractor, he shall restore such property to a condition similar to or equal to that existing before such damage or injury, in an acceptable manner and at his own expense. In case of failure of the Contractor to restore the property or make good such damage or injury, the Engineer may upon forty-eight hours notice, proceed to repair, rebuild or otherwise restore the property as may be deemed necessary and the cost of the restoration will be deducted from any money due or which may become due the Contractor under the Contract.

GP-7.12 LAND, AIR AND WATER POLLUTION

(a) The Contractor shall incorporate all permanent erosion control features into the work at the earliest practicable time as required by the Contract Documents. Temporary pollution control measures will be used to correct conditions that develop during construction that were not foreseen during design and which are needed prior to installation of permanent pollution control features or which are needed to control erosion that develops during normal construction but are not associated with permanent control features on the project.

(b) The Contractor's attention is directed to the fact that temporary pollution may include measures outside the right-of-way or project site where such work is necessary as a direct result of project construction. The Engineer shall be kept informed of all off-site control measures taken by the Contractor. This shall not relieve the Contractor of the responsibility for the work.

(c) In case of failure on the part of the Contractor to control erosion, pollution or siltation, the Engineer reserves the right to employ outside assistance or to use his own forces to provide the necessary corrective measures. All expenses incurred by the Engineer in the performance of such duties for the Contractor shall be withheld from monies becoming due to the Contractor.

(d) Contractors and suppliers must submit evidence to the City that the governing Federal, State and local air pollution criteria will be met. The evidence and related documents will be retained by the City for on-site evaluation.

(e) The Contractor shall be aware of the following in urbanized areas:

Upon notification by the Engineer that an air pollution alert stage exists which includes the area of construction, the Contractor shall halt the operation of all equipment larger than a pickup truck. If, in the opinion of the Engineer, lanes of traffic which are temporarily closed can be opened safely, they shall be immediately opened to facilitate the movement of traffic.

All construction operations shall cease during the emergency stage of the episode. The Contractor shall not resume normal operations after the emergency stage until directed to do so by the Engineer.

In preparing bids, prospective contractors shall consider the possibility of work interruptions due to air pollution alerts or emergencies and bid accordingly.

No additional compensation will be paid for equipment or labor idled during such work interruptions. Labor and equipment costs necessary to open or close traffic lanes for the duration of, or immediately after, such episodes shall be included in the lump sum bid for "Maintenance of Traffic" or in various other bid prices if there is no "Maintenance of Traffic" item.

(f) Construction Phase Air Quality Impact

Maryland State regulations governing the control of air quality in the Baltimore Metropolitan Area, as contained in the Maryland State Department of Health and Mental Hygiene, Bureau of Air Quality Control, latest edition, do not permit any construction activities without taking reasonable precautions to prevent generated particles from becoming airborne. The Contractor may be required to observe the following precautions during construction.

(1) Use of water or chemicals for control of dust in the demolition of existing buildings or structures, construction operations, grading of roads or the clearing of land.
(2) Application of asphalt, oil, water or suitable chemicals on dirt roads, materials stockpiles and other surfaces which can create airborne dust.
(3) Installation and use of hoods, fans and dust collectors to enclose and vent the handling of dust materials.
(4) Covering, at all times when in motion, open-bodied vehicles transporting materials likely to create air pollution. Alternate means may be employed to achieve the same results as would covering.
(5) The paving of roadways and their maintenance in a clean condition.
(6) The prompt removal from paved streets or earth of other material which has been transported there by trucks, earth-moving equipment or erosion by water.

In addition, all other established construction ordinances, codes, standards and criteria set by the governmental agencies will be observed during the construction period in order to keep air quality impact to a minimum.

GP-7.13 RESPONSIBILITY FOR DAMAGE CLAIMS

(a) The Contractor shall indemnify and save harmless and shall require that each subcontractor shall indemnify and save harmless the Mayor and City Council of Baltimore, Baltimore City, Department of Transportation, State Highway Administration, Maryland Department of Transportation, their agents and representatives from all suits, actions, or claims of any character whatsoever brought on account of any injuries or damages, including death, sustained by any person or property in consequence of any neglect in safeguarding the work or through the use of unacceptable materials in

the construction of the improvement, or on account of any act or omission by the said Contractor or subcontractor, his agents or employees or as a result of faulty, inadequate or improper storage or handling of explosives, or on account of any claims or amounts recovered for any infringement of patent, trademark, or copyright, or from any claims or amounts arising or recovered under the Workmen's Compensation Laws, or any other law, bylaw, ordinance, regulation, order or decree, whether by himself or his employees or subcontractors. The Contractor shall be responsible for all damage or injury to property of any character during the prosecution of the work which results from any act, omission, neglect or misconduct in the manner or method of executing the work or due to the non-execution of the work or at any time due to defective work or materials and said responsibility shall continue until the improvement is completed and accepted.

In the event the City Baltimore City, Department of Transportation, State Highway Administration or Maryland Department of Transportation or their representatives become subject to, or liable for any amounts, judgements, claims or losses resulting from the acts or omissions of the Contractor or subcontractor and his operations, the City shall have the right to retain any monies due or to become due to the Contractor or subcontractor until such suits, claims, losses etc., have been settled or otherwise disposed of and satisfactory evidence to that effect has been submitted to the Engineer.

(b) The Contractor shall conduct his operations within the right-of-way of any railroad company fully within the rules, regulations and requirements of the railroad company. The Contractor shall be responsible for acquainting himself with the requirements of the railroad company.

(c) The Contractor shall be held responsible for any accidents that may happen to the railroad company as a result of his operations.

(d) The Contractor shall not be held responsible for any claims arising from accidents incurred because of any traffic/and or general use permitted during the time the project or any section thereof is open to traffic under the terms of **GP-7.15** except due to the negligence of his agents or employees.

GP-7.14 LIABILITY INSURANCE

1. By the date of execution of this Contract, the Contractor shall purchase and maintain during the life of this Contract insurance against claims for injuries to persons or damages to property which may arise from, or in connection with the performance of work hereunder by the Contractor, its agents, representatives, employees, and/or subcontractors. The cost of such insurance shall be paid by the Contractor or subcontractor. The Contractor shall furnish separate certificates of insurance and policy endorsements for each subcontractor as evidence of compliance with the insurance requirements of this Contract.

   For all coverages: each insurance policy shall be written on an "Occurrence" form; except that insurance on a claims made form may be acceptable with prior City approval.

   If coverage is approved and purchased on a "claims made" basis, the Contractor warrants continuation of coverage, either through policy renewals or the purchase of an extended discovery period from the date of contract termination, and/or conversion from "claims made" form to an "occurrence" coverage form.

   (a) Insurance Generally

   Original or certified copies of policies for any and all insurance called for in the Specifications shall be submitted to the Engineer by the Contractor at the time he returns the signed copies of the Contract Documents for execution by City officials. All policies, or certified copies thereof, shall carry (45) days cancellation notice to the Mayor and City Council of Baltimore.

   The requiring of any and all insurance as set forth in these Specifications or elsewhere shall be in addition to and not in any way in substitution of all other protection provided under the Contract Documents.

No acceptance and/or approval of any insurance by the City and/or the Engineer shall be construed as relieving or excusing the Contractor or the Surety on his Bond from any liability or obligation imposed upon either or both of them by the provisions of the Contract Documents.

(b) Compensation, Liability and Property Damage Insurance

Except as otherwise provided by law, the Contractor shall, at all times, maintain and keep in force such insurance as will protect him from claims under Worker's Compensation Acts, and also such insurance as will protect him and the City Baltimore City, Department of Transportation and State Highway Administration and Maryland Department of Transportation from any other claims for damages for personal injuries, including death, as well as from claims for damages to any property of the City or of the public, which may arise from operations under the Contract, whether such operations be by the Contractor or any subcontractors or any one directly or indirectly employed by any of them.

Within ten days after the award of the Contract, the Contractor is required, in addition to any other forms of insurance or bonds required under the terms of the Contract and Specifications, to procure and maintain during the life of the Contract, the types of insurance in the amounts set forth below.

2. COMMERCIAL GENERAL LIABILITY INSURANCE

The Contractor shall purchase and maintain during the life of this Contract, Commercial General Liability Insurance, at limits of not less than One Million Dollars ($1,000,000.00) per occurrence for all damages arising out of bodily injuries or death and property damage and with those policies with aggregate limits, a Three Million Dollar ($3,000,000.00) aggregate limit is required. In case any work is subcontracted, the Contractor shall require the Subcontractor or anyone directly or indirectly employed by any of them to procure the same coverage.

Such insurance shall include:

a. Products – Completed Operations Insurance
b. Contractual Liability Insurance
c. Premises and Operations Insurance

There shall be no exclusions pertaining to collapse of or damage to any building or structure, damage to underground property, or injury or damage arising out of blasting or explosion. The provision shall apply to operations by the Contractor or any Subcontractor in the performance of this Contract.

3. BUSINESS AUTOMOBILE LIABILITY INSURANCE

The Contractor shall purchase and maintain, during the life of this Contract, Business Automobile Liability Insurance, at al limit of not less than One Million Dollars ($1,000,000) per occurrence for all damages arising out of bodily injuries or death and property damage. The Insurance shall apply to any owned , hired or non-owned automobiles used in the performance of this Contract.

4. SPECIAL HAZARDS INSURANCE

The Contractor shall purchase and maintain during the life of this Contract, Special Hazards Insurance in the event of the possibility of special hazards existing in the work contemplated. Such hazards shall be covered by insurance in amounts not less than those required for all other provisions of the Section (GP-7.14). If any special hazards, including hazardous material, are encountered during the performance of this Contract, the Contractor shall immediately notify the City. Prior to performing any further work involving hazards, the Contractor will immediately purchase insurance subject to City review and approval.

5. WORKER'S COMPENSATION

The Contractor shall purchase and maintain Worker's Compensation coverage as required by the State of Maryland, as well as any similar coverage required for this work by applicable Federal or "Other States" State Law.

6. DEDUCTIBLES AND SELF-INSURED RETENTIONS

Any deductibles or self-insured retentions must be declared to, and approved by, the City. The deductible and/or self-insured retention of the policies shall be wholly the responsibility of the Contractor.

7. OTHER INSURANCE PROVISIONS

The insurance policies required in the Contract are to contain, or be endorsed to contain, the following provisions:

a. General Liability Policies

1. The Mayor and City Council of Baltimore, its officers, officials, employees and agents (referred to as "City") and the Maryland Department of Transportation and the State Highway Administration and their officers, officials, employees and agents (referred to as "State") are to be covered as additional insureds as respects: liability arising out of activities performed by or on behalf of the Contractor in connection with this Contract.

2. To the extent of the Contractor's negligence, the Contractor's insurance coverage shall be primary insurance as respects the City and the State, their officers, officials, employees and agents. Any insurance and/or self-insurance maintained by the City, its officers, officials, employees or agents shall not contribute with the Contractor's insurance or benefit the Contractor in any way.

b. All Policies

Coverage shall not be suspended, voided, canceled, reduced in coverage or in limits, except by the reduction of the applicable aggregate limit by claims paid, until after forty-five (45) days prior written notice has been given to the City. There will an exception for non-payment of premium, which is ten days notice of cancellation.

8. ACCEPTABILITY OF INSURERS

Unless otherwise approved by the City,

Insurance is to be placed with insurers with a Bests' rating of no less than A:VIII, or, if not rated with Bests' with minimum surpluses the equivalent of Bests' surplus size VIII and must be licensed/approved to do business in the State of Maryland.

If any time the foregoing policies shall be or become unsatisfactory to the City, as to form, substance, or if a company issuing any such policy shall be or become unsatisfactory to the City, the Contractor shall, upon notice to that effect from the City, promptly obtain a new policy, and shall submit the same to the City, with appropriate certificates and endorsements, for approval.

9. VERIFICATION OF COVERAGE

At least ten days prior to the commencement of work, the Contractor shall furnish the City with verification of insurance and endorsements required by this Contract. The certificates and endorsements for each insurance

policy are to be signed by a person authorized by that insurer to bind coverage on its behalf. The certificates and endorsements for each insurance policy are to be on forms approved by the City prior to the commencement of activities associated with this Contract. The City reserves the right to require complete, certified copies of all required insurance policies at any time, such evidence of insurance shall refer to the project name and contract number.

10. SUBCONTRACTORS

The Contractor shall include all subcontractors as insureds under its policies or shall furnish separate certificates of insurance and policy endorsements for each subcontractor. Insurance coverages provided by Subcontractors as evidence of compliance with the insurance requirements of this Contract shall be subject to all of the requirements stated herein.

11. MUNICIPAL OR STATE AGENCY PROVISIONS

If the Contractor is a municipal entity or an agency of the State of Maryland and is self-insured for any of the above insurance requirements, a certification of self-insurance shall be attached hereto and be incorporated by reference and shall constitute compliance with this section.

GP-7.15 USE AND POSSESSION PRIOR TO COMPLETION

The City shall have the right to take possession of, or use, any completed or partially completed part of the work. Such possession of, or use, shall not be deemed an acceptance of any work not completed in accordance with the Contract. While the City is in possession, the Contractor shall be relieved of the responsibility for loss or damage to the portion of the work in possession of the City, other than that resulting from the Contractor's fault or negligence. If such prior possession or use by the City delays the progress of the work or causes additional expense to the Contractor, an equitable adjustment in the Contract price or the time of completion will be made and the Contract shall be modified in writing accordingly.

GP-7.16 CONTRACTOR'S RESPONSIBILITY FOR THE WORK

(a) Except as provided elsewhere herein, until final acceptance of the work by the City, the Contractor shall have the charge and care of the work and shall take every reasonable precaution against injury or damage to any part of the work as a result of the action of the elements or from any other cause, whether rising from the execution or from the non-execution of the work.

The Contractor, except as provided elsewhere herein, shall rebuild, repair, restore and make good all injuries or damages to any portion of the work, occasioned by any of the above causes before final acceptance and shall bear the expense therefor. Material lost, or structures damaged, as a result of faulty temporary drainage during construction or due to the action of the elements, shall be replaced or repaired by the Contractor at no cost to the City.

The Contractor shall make good, or replace at his expense and as necessary, any City-furnished material which may be broken, lost through fire, theft, or otherwise damaged, or in any way made unfit for the purpose and use intended, subsequent to delivery to the Contractor by the City and prior to final acceptance of the work, even though such breakage, damage, loss or uselessness may result from causes beyond the control of the Contractor.

(b) In case of suspension of work, for any cause whatever, the Contractor shall be responsible for the project and shall take such precautions as may be necessary to prevent damage to the work, provide for normal drainage and shall erect any temporary structures, signs or other facilities at his expense. During the period of suspension of work, the Contractor shall properly and continuously maintain, in an acceptable growing condition, all living material in newly established plantings, seedings and

soddings furnished under this Contract, and shall take precautions to protect new growth and other important vegetative growth against injury.

GP-7.17 CONTRACTOR'S RESPONSIBILITY FOR UTILITY PROPERTY AND SERVICES

At points where the Contractor's operations are adjacent to properties of railway, telegraph, telephone, and power companies, or are adjacent to other property, damage to which might result in expense, loss or inconvenience to the owner, work shall not begin until all arrangements necessary for the protection thereof have been made by the Contractor.

The Contractor shall cooperate with the owners of any underground or overhead utility lines in their removal and rearrangement operations in order that these operations may progress in a reasonable manner, that duplication or rearrangement work may be reduced to a minimum and that services rendered by those parties will not be unnecessarily interrupted.

In the event of interruption to utility services as a result of accidental breakage or as a result of being exposed or unsupported, the Contractor shall promptly notify the proper authority and shall cooperate with the authority in the restoration of service. No work shall be undertaken around fire hydrants until provisions for continued service have been approved by the local fire authority.

(a) **Utilities**

It shall be the Contractor's responsibility to support and protect all public or private utilities such as pipes, conduits and structures which will remain in place and in service during the term of the Contract, as indicated on the Plans. He shall also support and protect those which may be uncovered during construction or which may be installed by others during the work; and to meet all other conditions which may be encountered during construction.

In case of damage to any such pipes, conduits, or other structures, the Contractor shall, at his entire cost and expense, restore those utilities to a condition equal to that which existed before the damage was done.

(b) **Removal of Obstructions**

Should the location of any unknown gas or water pipe, public or private sewer or drain, conduit or other structure, in the opinion of the Engineer, require removal, realignment or change, such removal, realignment or change shall be without cost to the Contractor for the work of removal, realignment or change only. The Contractor shall strip, uncover, support and maintain the utility at his own cost and expense before such removal or before and after such realignment or change. The Contractor will only be entitled to claim damages or extra compensation on account of the removal, realignment or rearrangement of the same. The Contractor shall be entitled to an extension of time for the completion of the work equal to the time the Engineer shall determine the work has been delayed.

(c) **Protection, Shifting or Removal of Structures by Owners of Same**

The Contractor shall not cause any hindrance to, nor interfere with, any individual, City department, gas, railroad, street or railway or other company or companies in protecting, shifting, removing, replacing or repairing its or their mains, pipes, posts, poles, or other structures. The Contractor shall suffer the same individual, City department, gas, railroad, street, or other company or companies to take all such measures as they may deem wise or as may become necessary for the purpose aforesaid.

(d) **Obstructions**

In addition to showing the structures to be built and work to be done under the Contract, the plans show certain information obtained by the City regarding pipes, conduits, tracks, other structures and other conditions which exist along the lines of the work, both at and below ground surface. The City expressly disclaims any responsibility for the accuracy or completeness of said information and the Contractor will not be entitled to any extra compensation on account of inaccuracy or incompleteness of such information, said information being shown only for the convenience of the Contractor, who shall verify the information given to his own satisfaction. If the Contractor, in making up or submitting his bid, relies upon said information, he does so at his own risk. The giving of this information on the Contract Drawings does not relieve the Contractor of his obligation to support and protect all pipes, conduits, tracks and other structures which may be met with during the construction of the work, and to make good all damage done to such pipes, conduits, tracks and other structures as provided in the Specifications.

GP-7.18 PERSONAL LIABILITY OF PUBLIC OFFICIALS

There shall be no liability upon the Director, Department of Transportation, the Engineer or other authorized City or State employees, agents or representatives while carrying out any of the provisions of the Contract, or in exercising any power or authority granted to them by or within the scope of the Contract . The aforesaid individuals shall not be held liable either in a personal or official capacity, it being understood that in all such matters they act solely as agents and representatives of the City or State.

GP-7.19 NO WAIVER OF LEGAL RIGHTS

The Administration and the City shall not be precluded or estopped by any declaration, statement, measurement, estimate, or certificate made either before or after the completion and acceptance of the work and payment therefor, from showing that any such declaration, statement, measurement, estimate or certificate is untrue or is incorrectly made, nor from showing that the work or materials do not, in fact, conform to the Contract. The Administration and the City shall not be precluded or estopped, notwithstanding any such declaration, statement, measurement, estimate or certificate and payment in accordance therewith, from recovering from the Contractor or his sureties, or both, such damage as it may sustain by reason of his failure to comply with the terms of the Contract. Neither acceptance by the Administration or the City, or representative of the Administration and the City, nor payment for, or acceptance of, the whole or any part of the work, any extension of time, or any possession taken by the Administration or the City, shall operate as a waiver of any portion of the Contract or of any power herein reserved or of any right to damages.

The waiver of any breach of the Contract shall not be held to be a waiver of any previous or subsequent breach.

GP-7.20 NON-DISCRIMINATION

In accordance with the requirements of the State Finance and Procurement Article of the Annotated Code of Maryland and the laws of Baltimore City, the Contractor agrees that he will not discriminate in any manner against any employee or applicant because of political or religious opinion or affiliation, sex, race, creed, color, age or national origin. The Contractor further agrees that he will comply with any additional requirements with respect to non-discrimination which may be imposed by amendments to State and City laws.

The Contractor agrees to include a similar clause with respect to non-discrimination in all subcontracts, except subcontracts for standard commercial supplies or raw material. The Contractor and subcontractor or subcontractors agree to post, in conspicuous places available to employees and applicants for employment, notices setting forth the provisions of the non-discrimination clause or clauses. The Contractor agrees to comply with all applicable provisions of Executive Order 01.01.1976.05, issued July 9, 1976, and any amendment thereto, which is incorporated by reference herein, as though a part hereof.

Failure by the Contractor or subcontractor(s) to include the Contract provisions or to comply with the non-discrimination provisions set forth above shall be grounds for the City to exercise its remedies pursuant to the laws of the State of Maryland and Baltimore City.

The Contractor agrees that he will comply with the Civil Rights Act of 1964 and Section 202 of Executive Order 11246 of the President of the United States of America as amended by Executive Order 11375, as applicable.

The Contractor agrees that he will comply with any additional provisions as to non-discrimination specified elsewhere in the Contract Documents.

The Contractor and all subcontractors shall not engage in any employment practice prohibited by the Baltimore City Code, 1983 Replacement Volume, as amended.

The Contractor or any subcontractor shall not attempt, directly or indirectly, to commit any unfair employment practice; aid, abet, incite, compel or coerce the commission of any unfair employment practice as defined herein; or obstruct or prevent any person from complying with the previsions of the Baltimore City Code, 1983 Replacement Volume, as amended. Failure to adhere to the above shall constitute an unlawful employment practice.

In the event that a complaint shall be made against the Contractor or a subcontractor by a person claiming to have been the subject of an unlawful employment practice, in that he has been discriminated against in respect of hire, tenure or promotion, then in consideration of the City forbearing to take any other action to establish the alleged violation of the foregoing provisions and to claim a breach of the Contract thereunder and asserting its rights and pursuing any other remedies it might have because of such breach, the Contractor agrees that upon the following procedure being followed, he will abide by the determination made thereunder as hereinafter provided:

(a) The person aggrieved shall file his complaint, in writing, duly verified, with the Engineer within seven days after the alleged discriminatory act has occurred.

(b) The Engineer shall thereupon promptly investigate the complaint and may effect an amicable settlement thereon including, but not limited to, restitution, reinstatement or promotion, or failing that, shall make a finding of probable cause for the said complaint, or lack of it.

(c) If the finding of the Engineer shall be that the complaint lacked probable cause, then he is empowered to dismiss said complaint and no further action shall be taken in the matter by the City. If the Engineer finds probable cause for the complaint and fails to effect an amicable adjustment thereof, the complaint shall be submitted to the Director, Baltimore City Department of Transportation for his final determination, as referee with the same powers granted him in the Contract with respect to other disputes. If the final determination is that the Contractor or subcontractor, if any, is guilty of the discriminatory act charged, then the Contractor and/or his surety on his bond shall be liable to the discrimination for all wages which he shall have lost because of such discriminatory act, and

the amount of such lost wages shall be determined by the Director, Baltimore City Department of Transportation, whose decision thereof shall be final and conclusive on the Contractor, his surety, the subcontractor, if any, and the discriminatee; and if there shall be any balance then due from the City to the Contractor, the amount of wages so determined to be due to the discriminatee may be withheld by the City (in addition to any other sums to which the City may be entitled to withhold under the Contract) until restitution of lost wages have been made by the Contractor to the discriminatee in accordance with the determination of the Director, Baltimore City Department of Transportation. The Contractor further agrees that such discriminate shall have a right of action against said Contractor and/or his surety on his bond to recover the amount of lost wages by suit in law, in any competent court of jurisdiction.

The Engineer and Director, Baltimore City Department of Transportation, may utilize the services and seek the advice of any other agency of the City or employee thereof to assist them in making their determination hereunder.

The procedure and remedy outlined above is not to be construed as in any way depriving any person alleged to have been the subject of an unlawful practice, as defined herein, from pursuing any remedy he may have under law; nor

shall such procedure or remedy be construed as preempting the right of the Baltimore Community Relations Commission to take such action as it is authorized to and may deem proper under the law.

The Contractor agrees to insert the above provisions, with respect to unlawful employment practices, into each of his subcontracts and to obtain the agreement of all his subcontractors thereto and to the procedure set forth above.

A brief statement giving notice of the foregoing provisions, entitled "Prohibition against Discrimination", approved by the City Solicitor, shall be posted in conspicuous places at and about the job site and at any hiring hall or place of employment from which the Contractor or subcontractor hires employees to work on the job site.

GP-7.21 SANCTIONS UPON IMPROPER ACTS

All Contractors, including all officers, partners, principals or employees, shall be bound by and adhere to any and all federal, state and Baltimore City laws and resolutions and will be subject to the penalties and sanctions relating to:

(a) The procurement of work to be done or payment to be made under this contract;

(b) Contracts with persons convicted of bribery, attempted bribery or conspiracy to bribe;

(c) Disqualification for unfair labor practices;

(d) Collusion for the purpose of defrauding the Federal, State or City governments;

(e) Disqualification, suspension, debarment and reinstatement and;

(f) Any and all other laws or resolutions dealing with the bidding for and award of this Contract including, but not limited to, fraud, delinquent taxes, unfair labor practices, hours and wages, building codes and safety standards within the industry.

GP-7.22 NON-HIRING OF EMPLOYEES

No employee of the State of Maryland or City of Baltimore or any department, commission, agency or branch thereof, whose duties as such employee include matters relating to or affecting the Contract shall, while so employed, become or be an employee of the party or parties hereby contracting with the State of Maryland, City of Baltimore or any department, commission, agency or branch thereof.

GP-7.23 CHOICE OF LAW

The Parties to the Contract agree that:

(a) This Contract was made and entered into in Maryland and under the laws of Maryland.

(b) The laws and rules of Maryland and Baltimore City shall govern the resolution of any issue arising in connection with this Contract, including, but not limited to, all questions concerning the validity of the Contract, capacity of the parties to enter therein; modification or amendment thereto; and the rights and obligations of the parties hereunder.

GP-7.24 CONTINGENT FEE PROHIBITION

The Contractor warrants that he has not employed or retained any person, partnership, corporation, or other entity, other that a bona fide employee or agent working for him, to solicit or secure this Contract and that he has not paid or agreed to pay any person,, partnership, corporation, or other entity, other than a bona fide employee or agent any fee or any other consideration contingent on the making of this Contract.

GP-7.25 COST AND PRICE CERTIFICATION

(a) The Contractor shall submit cost or price information and shall certify that, to the best of his knowledge, the information submitted is accurate, complete, and current as of a mutually agreed date prior to the date the price of any:

(1) Negotiated contract is determined, if the total Contract price is expected to exceed $100,000 or a smaller amount set by the Engineer or;
(2) Change Order or Contract modification is determined which is expected to exceed $100,000, or a smaller amount set by the Engineer.

(b) The price, including profit or fee, shall be adjusted to exclude any significant price increase occurring because the Contractor furnished cost or price information which, as of the date agreed upon between the parties, was inaccurate, incomplete or not current.

(c) The Contractor or subcontractor shall maintain books and records that relate to the cost or pricing date for 3 years from the date of final payment under the Contract, unless a different period is authorized in the Contract. Any cost and pricing information submitted in accordance with **GP-7.25** shall be subject to the provisions of **BALTIMORE CITY LAW, EXECUTIVE ORDERS AND RULES.**

GP-7.26 CORPORATE REGISTRATION AND TAX PAYMENT CERTIFICATION

Corporations are required to execute a Certification of Corporation Registration and Tax Payment in the form included in the Contract Documents.

GP-7.27 BUY AMERICAN STEEL ACT

If the Contractor desires to utilize foreign steel and cement for any of the applicable items contained in the project, the Contractor shall comply with Section 169 of the Highway Act of 1982.

All bidders must submit a bid using domestic products for all items in this Contract. If the bidder elects, and additional alternate bid may be submitted using foreign products on one or more of the specific items in this Contract.

The Contract, if awarded, will be awarded to the responsible bidder who submits the lowest total bid for the Contract based on furnishing domestic products unless the bid exceeds the lowest total bid based on furnishing foreign products by more than twenty-five percent. Foreign steel products will not be permitted to be used as a substitute for domestic ones after the bid has been awarded.

GP-7.28 MINORITY BUSINESS ENTERPRISE AND AFFIRMATIVE ACTION

(a) This Contract is subject to Executive Order 01.01.1970.15, December 9, 1970; amended by Order 01.01.1976.05, July 9, 1976 (Code of Fair Practices). This Contract is also subject to the applicable provisions of Title 14, Subtitle 3 of the State Finance and Procurement Article of the Annotated Code of Maryland; and provisions of COMAR 11.01 which incorporate by reference the current revision of the Minority Business Enterprise Program. Copies of the Minority Business Enterprise Program may be obtained from the Department of Transportation Fair Practices Officer, P.O. Box 8755, BWI Airport, Maryland 21240. This Contract is also subject to all applicable Federal and State laws and regulations pertaining to Minority Business Enterprise and Affirmative Action.

(b) To the extent any of the above laws or regulations are applicable to this Contract, they are specifically incorporated herein.

(c) **THIRD TIER CONTRACTING** – Two conditions must be met before any administration may approve a third tier contracting arrangement which may be entered into a meet an MBE goal.

(1) The Administration awarding the Contract must be satisfied that there is no way, except by third tier contracting, that an MBE goal can be achieved; The Contractor must request of the Director, Department of Transportation, in writing, prior to the award of the Contract, that approval be granted for each third tier contract arrangement. The request must contain specifics as to why a third tier contracting arrangement should be approved.

An Administration approving a third tier contract should do so in writing, setting forth the parameters of the contract. All records of the contract will be maintained by the Administration granting approval.

Third tier contracting to meet an MBE goal is to be considered the exception and not the rule.

GP-7.29 PREVAILING WAGE CONTRACTS FOR PUBLIC WORKS

When all, or a portion of, the cost of a project is funded by the U.S. Government and the cost of the project exceeds $2,000, the minimum wage rates and benefits paid to workmen under the Contract shall be those prevailing in the locality as determined by the Secretary of Labor pursuant to the Davis Bacon Act (40 U.S.C.27a to a-7) and Regulations (29 CFR. Part 5) promulgated thereunder. Davis-Bacon rates applicable to this agreement, if any, are specified elsewhere in the Contract Document.

The bidder is hereby notified that all Minimum Wage Rates of the Mayor and City Council of Baltimore and the United States Department of Labor Wage Determinations shall be in force on all federally funded projects. However, if there is a conflict between the City and Federal wage rates, the higher wage rate will prevail.

In the event that any laborer, mechanic, or apprentice shall be paid less than the compensation to which he is entitled hereunder, the Contractor shall make restitution to the employee for the amount due and shall forfeit and pay tot he City a penalty in the amount of Twenty-Five Dollars per day for each employee so underpaid, provided, however, that no penalty shall be assessed for wage violations to any individual which amount to a total of less than One Dollar in any payroll period. Each day's violation shall constitute a separate offense.

The above paragraphs do not apply to the trainees required on most federal-aid projects. The trainees and training programs are approved and supervised by the E.E.O. section of the Baltimore City Department of Transportation.

The Contractor's attention is directed to the fact that BC DOT will impose the Liquidated Damages listed in F.H.W.A. Form PR 1273, as amended, in addition to the penalties imposed by City Ordinance 348, for Violations of the Contract Labor Provisions.

(a) Enforcement

(1) It shall be the responsibility of the contracting agency to promptly examine all weekly project payrolls submitted by Contractors and subcontractors working on the job site for compliance with the provisions of this subsection and the regulations promulgated in pursuance thereof and to report any irregulars to the Minimum Wage Commission.

(2) The Minimum Wage Commission shall cause investigations to be made to determine whether there Has been compliance with the provisions of this subsection and the regulations promulgated thereunder and contained in the Contract. The Contractor and subcontractor shall permit representatives of the City to observe work being performed at the work site, to interview employees and to examine the books and records relating to the payrolls on the project being investigated to determine the correctness of classifications, ratios of apprentices to mechanics and payment of proper regular and overtime rates as required. Alleged violations shall be investigated promptly and statements, written or oral, made by an employee shall be treated as confidential and shall not be disclosed to this employer without the consent of the employee. If necessary for the

enforcement of this subsection, the Minimum Wage Commission may issue subpoenas, compel the attendance and testimony of witnesses and the production of books, papers, records and documents relating to payroll records necessary for hearings, investigations and proceedings. Any subpoena shall be served by the Sheriff of Baltimore City or any of his deputies. In case of a disobedience to a subpoena, the Minimum Wage Commission may apply to a court of appropriate jurisdiction for an order requiring the attendance and testimony of witnesses and the production of books, papers, records and documents, as the case may be, as relevant or necessary for such hearings, investigations or proceedings of the Minimum Wage Commission, and any failure to obey such order of court may be punishable by the court as contempt thereof.

(3) In the event the Board of Estimates determines, upon the recommendation of the Minimum Wage Commission, after notice and hearing, that any Contractor or subcontractor has failed to pay the minimum wage rate or has otherwise violated the provisions of this subsection and that such failure was intentional, no contract shall be awarded to such Contractor or subcontractor, or to any firm, corporation or partnership in which such Contractor or subcontractor has an interest until one year has elapsed from the date of such determination. Any intentional violation of the provisions of this subsection is a misdemeanor, punishable upon conviction by a fine or not more than Five Hundred Dollars. Proceedings before the Minimum Wage Commission shall not be considered a pre-condition to criminal prosecution under this subsection.

(b) **Classification**

Every laborer, mechanic and apprentice shall be properly classified, according to his trade and skill into a classification specifically set forth in the Contract, which classification has been established by the Board of Estimates as provided herein.

© **Minimum Wage**

(1) Every mechanic, laborer and apprentice shall be paid no less often than once a week, without deduction or rebate on any account (except such payroll deductions as are directed or permitted by law, by a collective bargaining agreement or by a specific written consent or authorization for an employee), the full amount due at the time of payment computed at wage rates not less than the minimum hourly wage rate established by the Board of Estimates and the Federal Department of Labor, both wage rates to be set forth in the Contract, the higher wage rate to govern. No hourly employee, other than an apprentice, working directly upon the site of the work shall be paid less than the amount established for the lowest classification on the project. If a copy of such minimum hourly rates is not posted, the Contractor shall forfeit, and pay to the City, a penalty in the amount of Ten Dollars per day for each day on which the copy is not posted. Each day's violation shall constitute a separate offense.

(2) The Contractor and every subcontractor shall pay every laborer, mechanic or apprentice compensation at the overtime rates established by the Board of Estimates, which shall not be less than one and one-half times the regular hourly rates of pay, for all hours worked in excess of eight hours in any workday; on a Saturday, Sunday or a legal holiday designated as an overtime holiday by the Board of Estimates. No overtime hours, however, shall be compensated for more than once and overtime shall be paid only on the regular hourly rate of pay and not on fringe benefits or their cash equivalents.

(a) Payrolls and Basic Records

The Contractor shall submit three complete copies of his weekly project payrolls and the weekly project payrolls of each of his subcontractors, consecutively numbered, not later than fourteen days from the end of their respective payroll periods. Two copies shall be sent to the Baltimore City Department of Transportation Project Engineer, the other to the Minimum Wage Commission of Baltimore City where the same will be available for public inspection during regular business hours. The weekly project payrolls shall contain the name of the Contractor and the subcontractor, if any; a designation of the project and location; the name, social security number and occupation of

each employee; his classification in accordance with the classification fixed in the Contract; a designation of laborer, mechanic or apprentice; the number of hours worked daily by said employee at straight time and overtime and his hourly wage rate for each, the gross wages paid to said employee per week, and such other data as may be required by the Board of Estimates from time to time. The Contractor shall be responsible for the submission of all subcontractor's payrolls covering work performed directly at the work site. Each copy of the payroll shall be accompanied by a statement signed by the Contractor or subcontractor, as the case may be, indicating that the payroll is established by the Contract Proposal as set forth in the Contract, that the rates contained therein are not less than those established by the Contract Proposal as set forth in the Contract, that the classification set forth for each laborer, mechanic or apprentice conforms with the work he performed and that the Contractor and the subcontractor, as the case may be, has complied with the provision of this subsection.

(b) Apprentices

(1) On any project which is operating under a contract pursuant to the provisions of this subtitle, only competent mechanics and their apprentices of the trades, crafts and occupations involved shall be employed by the Contractor and his subcontractors on the project, provided that for each such project, the ratio of mechanics to apprentices for each trade, craft or occupation shall be as established by the Maryland Apprenticeship and Training Council in connection with an approved apprenticeship program.

(2) Nothing in this subtitle shall prevent the employment of laborers to perform work not ordinarily performed by a skilled mechanic or his apprentice of trade, craft, or occupations, but no person receiving the rate of pay which is the prevailing rate for laborers shall perform work ordinarily performed by any such skilled mechanic or apprentice of such trade, craft or occupation.

(3) The term **"Apprentice"**, as used in this subtitle, means a person at least sixteen years of age who has entered a written agreement with an employer, or his agent, an association of employees or an organization of employers, or a joint committee representing both, which shall state the trade, craft or occupation which the apprentice is to be taught and the time at which the apprenticeship will begin and end, provided that whenever an apprentice is employed on any project which is operating under a contract pursuant to the provisions of the subtitle, the minimum wage commission shall be notified of such employment. All such apprenticeship agreements shall be approved by the Maryland Apprenticeship and Training Council and certification of such approval shall be furnished to the Minimum Wage Commission.

(4) Where a laborer performs the work ordinarily performed by any skilled mechanic or his apprentice, he shall be paid, for the entire time he has performed such work, at the minimum hourly wage rate applicable to a skilled mechanic. In the event of underpayment, restitution shall be made by the Contractor to said employee and, in addition, the Contractor shall be subject to a penalty as hereinafter set forth. If the Contractor or subcontractor utilizes more apprentices than permitted under the ratio established by this subtitle or utilizes a laborer to perform the work of a skilled mechanic or his apprentice, the Contractor shall forfeit and pay to the City a penalty in the amount of Ten Dollars per day for each violation. Each day's violation shall constitute a separate offense.

GP-7.30 SMALL BUSINESS PROCUREMENTS

The provisions of "COMAR" 21.11.01 pertaining to small business set-asides shall not apply to this Contract.

GP-7.31 PLANT PEST REGULATIONS

The indiscriminate movement of nursery stock, mulch, equipment and soil into and out of Maryland constitutes a potential hazard to State and National agriculture. It shall be the responsibility of the Contractor to comply with all applicable State and Federal plant pest regulations in the fulfillment of this Contract.

Regulations may be obtained through the following offices:

State Entomologist
University of Maryland
College Park, Maryland 20740
Telephone: (301927-3800 ext. 262

U.S. Department of Agriculture
Agriculture Research Services
Plant Pest Control Division
Plant Industry Station
Administration Building – Room 415
Beltsville, Maryland 20705
Telephone: (301) 474-5500 ext. 391

GP-7.32 MAINTAINING FLOW OF SEWERS AND DRAINS

The Contractor shall, at his own cost and expense, provide for and maintain the flow of all sewers, drains, house or inlet connections, and all water courses which may be met with during the progress of the work.

He shall not allow the contents of any sewer, drain, house, or inlet connection to flow into the trenches of the drains to be constructed under the contract, except where written permission is given by the Engineer, and shall at his own cost and expense, immediately remove from the proximity of the work all offensive matter, using precautions in so doing as may be directed by the Engineer.

GP-7.33 ADJACENT BUILDING AND PROPERTY

It shall be the Contractor's responsibility to support and protect all buildings and property on or adjacent to the project site against settlement and damage during construction operations by adequate shoring, bracing and sheeting, acceptable to the Engineer. In case of any settlement or damage to such buildings or property, the Contractor, at his own cost and expense, shall restore such buildings and property equal to that which existed before damage was done.

GENERAL PROVISIONS – SECTION 8

PROSECUTION AND PROGRESS

GP-8.01 SUBCONTRACTING

A subcontractor is neither a bona fide material supplier nor manufacturer who produces, fabricates, supplies or delivers items to the site of the work for use in construction activities. Transportation by common carrier over regular routes shall not be considered as a subcontractor work. If a materialman, manufacturer or carrier, or his mechanics or laborers, undertakes to perform any part of the construction, installation or other contract activity, he must do so as a subcontractor.

Except as may be provided elsewhere in the Contract, the Contractor to whom a contract is awarded shall perform, with his own organization and with the assistance of workmen under his immediate supervision, work of a value of not less than 50 percent of the total original value of the Contract.

No portion of the Contract shall be subcontracted, assigned or otherwise disposed of except with the written consent of Department of Transportation. Any assignment, subcontractor or other disposition of all or part of this Contract, without the express written consent of the Director, DOT, shall be null and void. Consent to subcontract, assign or otherwise dispose of any portion of the Contract shall not be construed to relieve the Contractor or surety of any responsibility for fulfilling all the requirements of the Contract.

The Contract shall incorporate by reference, or otherwise include, these General Provisions in every subcontract issued pursuant to or under this Contract, **AND SHALL REQUIRE THAT THE SAME REFERENCE OR INCLUSION BE CONTAINED IN EVERY SUBCONTRACT ENTERED INTO BY ANY OF ITS SUBCONTRACTOS.**

Subletting will be permitted within limits of the Specifications when prequalified subcontractors are proposed following the opening of bids. Requests for subletting by a Contractor must be accompanied by a work capacity statement, plan and equipment questionnaire. The consent of surety for each subcontractor is also requested.

Credit will be given, to the maximum permitted, for all approved subletting under the Specifications.

Only prequalified subcontractors will be approved to perform subcontract work.

In all contracts jointly bid, all contractors will be held jointly and severally responsible for the performance of the entire Contract.

GP-8.02 NOTICE TO PROCEED

After the Contract has been executed, the Baltimore City Department of Transportation will, within the time limit specified elsewhere in the Contract Documents, issue a Notice to Proceed to the Contractor. The notice will stipulate when the Contractor is expected to begin work. The specified Contract Time shall begin on the date stipulated in the Notice to Proceed or, if an earlier start is authorized in the Notice to Proceed, on the day work (other than the erection of the inspection office, construction stakeouts, and mobilization) actually starts. Work done prior to receipt of the Notice to Proceed is unauthorized and will not be measured or paid for.

GP-8.03 PROSECUTION OF THE WORK

(a) The Contractor shall begin work promptly within the time specified by the Engineer and shall notify the Engineer at least 48 hours before starting the work.

(b) After the work has been started, it shall be prosecuted continuously on all acceptable working days without stoppage until the entire Contract is completed.

(c) Should the Contractor wish to discontinue prosecution of the work for any reason, the Contractor shall notify the Engineer of his intention to stop and shall also notify the Engineer at least 24 hours in advance of resuming operations. Said notification shall be confirmed in writing.

GP-8.04 PROGRESS SCHEDULE

It will be the Contractor's responsibility to submit, in writing, a schedule of operations to the Chief Construction Management, Department of Transportation, and to obtain his approval before any work is done under this Contract.

(a) Within 30 days after Notice to Proceed, the Contractor shall furnish the Engineer a progress schedule showing the proposed order of work and indicating the time required for the completion of the work. The progress schedule shall be used to establish major construction operations and to check on the progress of the work. The Contractor shall submit revised progress schedules as directed by the Engineer. On federal aid projects, the progress schedule must be submitted prior to the Notice to Proceed, as stipulated in **TC-5.02.**

The Contractor, at this option, may submit a revised schedule of operations for approval by Construction Management, Baltimore City Department of Transportation. The final responsibility for work scheduling shall rest with the Contractor.

(b) If the Contractor fails to submit the progress schedule within the time prescribed, or revised schedules within the requested time, the Engineer may withhold approval of progress payment estimates until the Contractor submits the required progress schedules.

(c) If, in the judgement of the Engineer, the Contractor falls behind the approved schedule, the Contractor shall action to improve his progress. The Contractor may be required to increase the number of shifts, initiate or increase overtime operations, increase days of work in the work week or increase the amount of construction plant or any combination of the above as will enable the Contractor to get back on schedule.

The Engineer may require the Contractor to prepare supplemental or revised progress schedules for his review and approval, detailing specific operational changes to be instituted by the Contractor to regain the approved schedule. Such supplementary or revised schedules shall be prepared and submitted to the Engineer at no additional cost to the City.

Failure of the Contractor to comply with the requirements of the Engineer under this provision shall be grounds for a determination that the Contractor is not prosecuting the work with due diligence so as to complete the work within the time specified. Should such a determination be made, the Engineer may terminate the Contractor's right to proceed with the work, or any part thereof, in accordance with **GP-8.08.**

(c) If the project completion date is a calendar date or based calendar days, the Engineer shall not grant partial or complete winter shutdowns. Bidders should take this into consideration in preparing their bids, including the steps contained in (c) above to increase progress.

(e) Progress Photographs

(1) The Contractor shall supply professional-quality color photographs to the Baltimore City Department of Transportation, as herein described. Photos shall be taken at as many locations as necessary to show the entire job site, as selected by the Engineer, as to the locations of the most visible change to be affected by the Contract. Photographs must be made by a professional photographer, knowledgeable in construction.

(2) Photographs for the Contract shall include progress at off-site fabricating outfitting facilities.

(3) It's anticipated that the number of photographs to be taken per month will not be more than fifteen. Photographs shall be taken between the 1st and 10th of each month, when possible, and delivered within a reasonable amount of time, but no later than the 10th of the following month. Two full-frame, horizontal, 8"x10" prints with negatives will become the sole property of the State Highway Administration and be delivered to the Baltimore City Department of Transportation at 417 East Fayette Street, Baltimore, Maryland 21202. Negatives must be a minimum of 2 ¼"x2 ¼" in size. Each photograph must have a title block located in the lower right hand front side of the print containing:

i. Contract and F.A.P. numbers
ii. Identification and name of contract
iii. Name of contractor
iv. A brief description of location taken (station no. and direction of view)
v. Date taken
vi. Number of print with negative in sequence of order
vii. Name of photographer

The cost of photography, including all items noted above, shall be considered incidental to the item **"Mobilization"** in the contract and shall be included in the lump sum price bid for that item.

GP-8.05 LIMITATIONS OF OPERATION

The Contractor shall perform the work in a manner and in a sequence that will assure the least interference with the public at all times.

GP-8.06 CHARACTER OF WORKMEN, METHODS AND EQUIPMENT

The Contractor shall employ sufficient labor and equipment for prosecuting the work to completion in the manner and time required by the Contract.

Workmen must have sufficient skill and experience to properly perform the work assigned to them. Workmen engaged in special work or skilled work shall have sufficient experience in such work, and in the operation of the equipment required, to perform the work properly and satisfactorily.

Any person employed by the Contractor or by any subcontractor who, in the opinion of the Engineer, does not perform his work in a proper manner or is intemperate or disorderly shall, at the written request of the Engineer, be removed from the job by the Contractor or subcontractor employing such person and shall not be employed again, in any portion of the work, without the approval of the Engineer. Should the Contractor fail to remove such person, or fail to furnish suitable and sufficient personnel for the proper prosecution of the work, the Engineer may withhold payments which are, or may become, due on the Contract until a satisfactory understanding has been reached.

Equipment used on the work shall meet the requirements of the work and produce a satisfactory quality of work. The Engineer may order the removal and replacement of unsatisfactory equipment.

When the methods and equipment to be used by the Contractor in accomplishing the construction are not prescribed in the Contract, the Contractor is free to use any methods or equipment that he demonstrates, to the satisfaction of the Engineer, that will accomplish the work in conformance with the requirements of the Contract.

When the Contract specifies that the construction be performed by the use of certain methods and equipment, those methods and equipment shall be used, unless otherwise authorized by the Engineer in writing. If the Contractor desires to use a method or type of equipment other than that specified in the Contract, he may request authority from the Engineer to do so. The request shall be in writing and shall include a full description of the methods and equipment to be used and an explanation of the reasons for desiring to make the change. If approval is given, it will be on the condition that the Contractor will be fully responsible for producing work in conformance with Contract requirements.

If, after trial use of the substituted methods or equipment, the Engineer determines that the work produced does not meet Contract requirements, the Contractor shall discontinue the use of the substituted methods or equipment and shall complete the remaining construction with the specified methods and equipment. The Contractor shall remove any deficient work and replace it with work of specified quality, or take such other corrective action as the Engineer may direct. No change will be made in basis of payment for the construction items involved or in Contract Time, as the result of authorizing a change in methods or equipment under these provisions.

GP-8.07 SUSPENSION OF WORK

(a) The Engineer may order the Contractor, in writing, to suspend, delay, or interrupt all or any part of the work for a period of time deemed to appropriate by Engineer, for the convenience of the City

(b) If the performance of all, or any part of, the work is suspended, delayed, or interrupted by an act of the Engineer in the administration of this Contract for an unreasonable period of time, or by his failure to act within the time specified in the Contract or, if no time is specified, within a reasonable time, an adjustment shall be made for any increase in the cost of performance of the Contract (excluding profit) caused by that unreasonable suspension, delay, or interruption. The Contract shall be modified, in writing, accordingly.

No adjustment shall be made under this clause for any suspension, delay or interruption in the event that the work would have been suspended, delayed or interrupted by another cause, including the fault or negligence of the Contractor or for which an adjustment is provided for or denied, under any other provisions of the Contract.

(c) No claim under this clause shall be allowed:

(1) For any costs incurred more than 20 days before the Contractor has notified the Engineer, in writing, of the act (or failure to act) involved, (This requirement shall not apply to a claim resulting from a suspension order.) and,
(2) unless the claim, in an amount stated, is asserted, in writing, as soon as practicable after the termination of a suspension, delay or interruption, but no later than the date of final payment under the Contract.

GP-8.08 TERMINATION FOR DEFAULT; DAMAGES FOR DELAY; TIME EXTENSIONS

(a) If the Contractor refuses to, or fails to, prosecute the work or any part thereof with such diligence as shall insure its completion within the time specified in this Contract, or any extension thereof; or fails to complete the work within the time specified, the City may, by written notice to the Contractor, terminate his right to proceed with the entire work or the part of the work which has been delayed. The City may take over the work and prosecute the same to completion and may take possession of, and utilize in completing the work, the materials, appliances and plant as may be on the site which are required and necessary therefor. Whether or not the Contractor's right to proceed with the work is terminated, he and his sureties shall be liable for any damage to the City resulting from his refusal or failure to complete the work within the specified time.

(b) If liquidated damages are provided in the Contract and the City terminates the Contractor's right to proceed, the resulting damage shall consist of such liquidated damages for so long a time as may be required for final completion of the work **AND ANY INCREASED COSTS INCURRED BY THE CITY IN COMPLETING THE WORK.**

(c) If liquidated damages are provided in the Contract and if the City does not terminate the Contractor's right to proceed, the resulting damage shall consist of these liquidated damages until the work is completed and accepted.

(d) The Contractor's right to proceed may not be terminated nor the Contractor charged with resulting damages if:

(1) Delay in the completion of the work arises from unforeseeable causes beyond the control and without the fault or negligence of the Contractor, including but not restricted to, acts of God, acts of public enemy, acts of the City or State in either their sovereign or contractual capacity, acts of another capacity, acts of another contractor in the performance of a contract with the City, fires, floods, epidemics, quarantine restrictions, strikes, freight embargoes, unusually severe weather, or delays of subcontractors or suppliers arising from unforeseeable causes beyond the control and without the fault or negligence of both the Contractor and the subcontractor or suppliers; and

(2) The Contractor, within 10 days from the beginning of any such delay (unless the Engineer grants a further period of time before the date of final payment under the Contract), notifies the Engineer, in writing, of the causes of delay. The Engineer shall ascertain the facts and the extent of the delay and extend the time for completing the work when, in his judgement, the findings of fact justify such an extension. His findings of fact shall be final and conclusive on the parties, subject only to appeal as provided in **GP-5.15** of the Contract.

(e) If, after the notice of termination of the Contractor's right to proceed under the provisions of this clause, it is determined that the Contractor was not in default under its provisions, or that the delay was excusable under its provisions, the rights and obligations of the parties shall be the same as if the notice had been issued pursuant to the clause, if the Contract contains a clause providing the termination of the Contract for the convenience of the City. If the Contract does not contain a clause providing for termination for convenience of the City, the Contract shall be equitably adjusted to compensate for the termination and the Contract shall be modified accordingly. Failure to agree to the adjustment shall constitute a dispute concerning a question of fact within the meaning of **GP-5.15, "Disputes"** clause of the Contract.

(f) The rights and remedies of the City provided in this clause are in addition to any rights or remedies provided by law or elsewhere in the Contract.

(g) The term "subcontractors or suppliers", as used in paragraph (d)(1), means subcontractors or supplier at any tier.

GP-8.09 LIQUIDATED DAMAGES

Time is an essential element of the Contract and it is important that the work be vigorously prosecuted until completion. For each day that any work shall remain uncompleted beyond the time specified in the Contract, the Contractor and his surety shall be liable for liquidated damages in the amount provided for in the solicitation, provided, however, that due account shall be taken of any adjustment of Completion Time modified by approved Change Orders.

GP-8.10 TERMINATION FOR CONVENIENCE OF THE CITY

(a) Performance of work under the Contract may be terminated by the City in accordance with this clause, in whole or in part, whenever the Engineer shall determine that such termination is in the best interest of the City. Any such termination shall be effected by delivery to the Contractor of a Notice of Termination specifying the extent to which performance of work under the Contract is terminated and the effective date of termination.

(b) After receipt of Notice of Termination, except as otherwise directed by the Engineer, the Contractor shall:

(1) Stop work under the Contract on the date and to the extent specified in the Notice of Termination;

(2) Place no further orders or subcontracts for materials, services or facilities, except as may be necessary for completion of the portion of the work under the Contract that is not terminated;

(3) Terminate all orders and subcontracts to the extent that they relate to the work terminated by Notice of Termination;

(4) Assign to the City, in the manner, at the time, and to the extent directed by the Engineer, all of the right, title and interest under the terminated orders and subcontracts, in which case the City shall have the right to settle or pay any or all claims arising out of the termination of such orders and subcontracts;

(5) Settle all outstanding liabilities and all claims arising from the termination of orders and subcontracts with the approval or ratification of the Engineer, to the extent he may require, which approval or ratification shall be final for all the purposes of this clause;

(6) Transfer title and deliver to the City in the manner, at the time and to the extent directed by the Engineer, fabricated or unfabricated parts, work in process, completed work, supplies and other material produced as part of, or acquired in connection with, the performance of the work terminated by the Notice of Termination and the completed or partially completed plans, drawings, information and other property which, if the Contract had been completed, would have been required to be furnished to the City;

(7) Use his best effort to sell, in the manner, at the times, to the extent and at the price directed or authorized by the Engineer, any property of the types referred to in **(6)**, above. The Contractor will not be required to extend credit to any purchaser and, may acquire any such property under conditions prescribed by, and at a price approved by the Engineer, and provided further that the proceeds of any transfer or disposition of property shall be applied in reduction of any payments to be made by the City to the Contractor under the Contract or shall otherwise be credited to the price or cost of the work covered by the Contract, or paid in such other manner as the Engineer may direct;

(8) Complete performance of such part of the work as may not have been terminated by the Notice of Termination; and take such action as may be necessary, or as the Engineer may direct, to protect and preserve the property related to this Contract which is in his procession and in which the City has, or mayacquire, an interest. The Contractor may submit a list certified as to quantity and quality of any or all items of termination inventory not previously disposed of the engineer., exclusive of items the disposition of which have been directed or authorized by the Engineer, and may request the City to remove such items or to enter into a storage agreement covering them. Not later the 15 days thereafter, the City shall accept title to such items and remove them or enter into a storage agreement covering the same, provided that the list submitted shall be subject to verification by the Engineer upon removal, or if the items are stored, within 45 days from the date of submission of the list Any correction to list shall be make prior to final settlement and preserve the property related to this Contract which is in his possession and in which the City has, or may acquire, an interest. The Contractor may submit a list certified as to quantity and quality of any or all items of termination inventory not previously disposed of to the Engineer, exclusive of items the disposition of which have been directed or authorized by the Engineer, and may request the City to remove such items or to enter into a storage agreement covering them. Not later than 15 days thereafter, the City shall accept title to such items and remove them or enter into a storage agreement covering the same, provided that the list submitted shall be subject to verification by the Engineer upon removal, or if the items are stored, within 45 days from the date of submission of the list. Any correction to the list shall be made prior to final settlement.

(c) After receipt of a Notice of Termination, the Contractor shall submit his termination claim to the Engineer, in the form and with the certification prescribed by the Engineer. The claim shall be submitted promptly, but in no event later than one year from the effective date of termination unless extensions, in writing, are granted by the Engineer at the request of the Contractor. Requests must be written and submitted within one year or in an authorized extension thereto. If the Engineer determines that the facts justify such action, he may act upon a termination claim at any time after the one-year period or extension thereto. Upon failure of the Contractor to submit his termination claim within the time allowed, the Engineer may determine, on the basis of information available to him, the amount, if any, due to the Contractor by reason of the termination and shall thereupon pay the Contractor the amount determined.

(d) Subject to the provisions of paragraph **(c)**, the Contractor and the Engineer may agree upon the whole or any part of the amount to be paid to the Contractor by reason of the total or partial termination of work pursuant to this clause. The amount may include a reasonable allowance for profit on work done; provided, that the agreed amount, exclusive of settlement costs, shall not exceed the total Contract price, as reduced by the amount of payments otherwise made, and as further reduced by the Contract price for work not terminated. The Contract shall be amended accordingly, and the Contractor shall be paid the agreed amount. Nothing in paragraph **(e)** of this clause, prescribing the amount to be paid to the Contractor in the event of failure of the Contractor and the Engineer to agree upon the whole amount to be paid to the Contractor by reason of the termination of work pursuant to this clause, shall be deemed to limit, restrict, or otherwise determine or affect the amounts which may be agreed upon to be paid to the Contractor pursuant to this paragraph.

(e) In the event of the failure of the Contractor and the Engineer to agree, as provided in paragraph **(d)**, upon the entire amount to be paid to the Contractor by reason of the termination of work pursuant to this clause, the Engineer shall pay the Contractor the following amounts, determined as follows, with no duplication of any amounts agreed to in accordance with paragraph **(d).**

(1) With respect to all contract work performed before the effective date of the Notice of Termination, the total (without duplication of any items) of:

i. The cost of the work;

ii. The cost of settling and paying claims arising from the termination of work under subcontracts or orders as provided in paragraph **(b)(5)** above, exclusive of the amounts paid or payable on account of supplies or materials delivered or services furnished by the subcontractors before the effective date of the Notice of Termination of work under the Contract, which amounts shall be included in the cost of which payment is made under **(a)** above; and

iii. A sum, as profit on **(a)** above, determined by the Engineer to be fair and reasonable; provided, however, that if it appears that the Contractor would have sustained a loss on the entire Contract had it been completed, no profit shall be included or allowed under this subdivision **(c)** and an appropriate adjustment shall be made reducing the amount of the settlement to reflect the indicated rate of a loss; and

(2) The reasonable cost of the preservation and protection of property, incurred pursuant to paragraph **(b)(9)** above, and any other reasonable cost incidental to termination of work under this Contract, including expenses incidental to the determination of the amount due to the Contractor as the result of the termination of work under the Contract.

The total sum to be paid to the Contractor under **(1)** above, shall not exceed the total Contract price as reduced by the amount of payments otherwise made and as further reduced by the Contract price of work not terminated. Except for normal spoilage, and except to the extent that the City shall have otherwise expressly assumed the risk of loss, there shall be excluded from the amounts payable to the Contractor under **(1)** above, the fair value, as determined by the Engineer, of property which is destroyed, lost, stolen, or damaged so as to become undeliverable to the City, or to a buyer pursuant to paragraph **(b)(7)**.

(f) Costs claimed and agreed to shall be in accordance with applicable City, State and local laws, regulations and ordinances.

(g) The Contractor shall the right of appeal under the clause of these Specification entitled "Disputes", from any determination made by the Engineer, unless he ahs failed to submit his claim within the time provided herein and has failed to request an extension of time.

In any case where the Engineer has made a determination of the amount due Contractor, the City shall pay to the Contractor the following:

(1) If there is no right of appeal hereunder or if no timely appeal has been made, the amount determined by the Engineer; or
(2) If an appeal has been taken, the amount finally determined by the Engineer.

(h) In arriving at the amount due the Contractor under this clause, there shall be deducted:
(i) All unliquidated advances, or other payments or accounts made to the Contractor, applicable to the terminated portion of the Contract.
(2) Any claim which the City may have against the Contractor in connection with the Contract,; and
(3) The agreed price for, or the proceeds of sale of, any materials, supplies or other things acquired by the Contractor or sold, pursuant to the provisions of this clause and not otherwise recovered by, or credited to, the City.

(i) If the termination hereunder is partial, the Contractor may file a claim with the Engineer for an equitable adjustment of the price or prices specified in the Contract relating to the continued portion of the Contract (the portion not terminated by the Notice of Termination). Equitable adjustment, as may be agreed upon, shall be made in price or prices. Any claim by the Contractor for an equitable adjustment under this clause shall be asserted within ninety days from the effective date of the termination notice, unless an extension is granted in writing by the Engineer.

(j) The City may from time to time, under such terms and conditions as it may determine, make partial payments and payments on account against costs incurred by the Contractor in connection with the terminated portion of the Contract whenever, in the judgment of the Engineer, the aggregate of such payments shall be within the amount to which the Contractor would be entitled to hereunder.

(k) Unless otherwise provided for in the Contract or by applicable statute, the Contractor shall, from the effective date of termination until three years after final settlement of the Contract, preserve and make available to the City, all his books, records, documents and other evidence bearing on the costs and expenses of the Contractor under the Contract and relating to work terminated hereunder or, to the extent approved by the Engineer, photographs, microphotographs or other authentic reproductions thereof.

GP-8.11 SUCCESSFUL TERMINATION OF CONTRACTOR'S RESPONSIBILITY

A Contract will be considered as successfully fulfilled when the work has been completed in accordance with the terms of the Contract, when Final Acceptance has occurred, when Final Payment has been authorized, when all of the obligations of the Contractor and his surety have been complied with and when Final Payment has been made.

GENERAL PROVISIONS – SECTION 9

PAYMENT

GP-9.01 SCOPE OF PAYMENT

Payment to the Contractor will be made for the actual quantities of Contract items performed in accordance with the Plans and Specifications and if, upon completion of the construction, these actual quantities show either an increase or decrease from the quantities given in the bid schedule, the Contract unit prices will still prevail, except as provided in **GP-4.04 Variations in Estimated Quantities.**

The payment of any partial estimate or of any retained percentage, except by and under the approved final estimate and voucher, in no way shall affect the obligation of the Contractor to repair or renew any defective parts of the construction or to be responsible for all damages due to such defects.

When requested in writing by the Contractor and approved by the Engineer, payment allowance will be made for non-perishable material to be incorporated in the work, delivered and stockpiled at the work site or other approved site. Material for which payment has been made, wholly or partially, shall not be removed from the work site or other approved site.

Payment to the Contractor and any subcontractor with a lower tier subcontract under this section for materials on hand in no way will be construed as acceptance by the City of title to the material. Title shall remain with the Contractor until the project has been completed and accepted in accordance with **GP-5.13.**

The Contractor shall indicate his Federal Tax Identification Number or Social Security Number on the face of each invoice billed to the City.

On contracts in excess of $25,000, the Contractor, and any subcontractor with a lower tier subcontract, prior to receiving a progress or final payment under the Contract, shall first certify in writing the he has made payment from proceeds of prior payments and that he will make timely payments from the proceeds of the progress

the final payment due him, to his subcontractors and suppliers in accordance with his contractual arrangements with them and State Finance and Procurement Article 17-106 and the laws of Baltimore City. This certification may be required by the Engineer for contracts of $25,000 or less.

The Contractor shall also obtain from each subcontractor a certification that it has made payment from proceeds of prior payments to any of its lower tier subcontractors, and will make timely payments to its lower tier subcontractors and suppliers in accordance with its contractual arrangements with them. This certification is not required from subcontractors who have no lower tier subcontracts. These certifications may be required by the Director, Department of Transportation , for contracts of $25,000 or less.

In addition to any other remedies provided by law or this Contract, any Contractor or subcontractor of any tier who fails to make payments required by the certifications set forth above within thirty days from the date such payment is due, shall be obligated to include with such payment, interest at the rate of 10% per annum from the date payment was due to the date the payment was actually made to the subcontractor or lower tier subcontractor.

GP-9.02 FORCE ACCOUNT WORK

When the Contractor is required to perform work as a result of additions or changes to the Contract for which there are no applicable unit prices in the Contract, the Baltimore City Department of Transportation and the Contractor shall make every effort to come to an agreed-upon price for the performance of such work. If an agreement cannot be reached, the Baltimore City Department of Transportation may require the Contractor to do the work on a force account basis, to be compensated in accordance with the following:

(a) Labor. For all labor, and for foremen in direct charge of the specific operations, the Contractor shall receive the actual wages for each and every hour that said labor and foremen are actually engaged in the work.

(b) Materials. For materials accepted by the Engineer and used, the contractor shall receive the actual cost of such materials delivered to the work site, including transportation charges paid by him but not including machinery rentals as hereinafter set forth.

(c) Equipment. For any machinery or special equipment (other than small tools, whether rented or owned), the use of which has been authorized by the Engineer, the Contractor shall receive the rates agreed upon in writing before work is begun, or the Contractor shall receive those rates which may be specified elsewhere in the Special Provisions. For the purpose of definition, equipment with a new cost of $500 or less will be considered small tools.

(d) Materials and Supplies Not Incorporated in the work. For materials and supplies expended in the performance of the work (excluding those required for rented equipment) and approved by the Engineer, the Contractor shall receive the actual cost of the materials and supplies used. The Contractor shall receive a reasonable allowance for materials used but not expended in the performance of the work.

(e) Subcontractors. The Contractor shall receive the actual cost of work performed by a subcontractor. Subcontractor's cost is to be determined in accordance with **(a), (b), (c),** and **(d)** above, plus the fixed fee for overhead and profit allowance computed in accordance with **(g)**.

(f) Superintendence. No additional allowance shall be made for general superintendence, the use of small tools or other costs of which no specific allowance is herein provided.

(g) Contractor's Fixed Fee. The Engineer and the Contractor shall negotiate a fixed fee for force account work performed, pursuant to **GP-9.02**, by Contractor's forces and by subcontractor(s), as compensation for overhead and profit for the work performed. Failure of the Contractor and the Engineer to negotiate a fixed fee, shall be treated as a **Dispute** pursuant to **GP-5.15** and the Contractor shall proceed diligently with the performance of the force account work to completion. The Contractor's fixed fee shall include an amount equal to the sum of 65 percent of **(a)** which shall include, but not be limited to, the following:

(1) Compensation for all costs paid to, or on behalf of, workmen by reason of subsistence and travel allowances, health and welfare benefits, pension fund benefits or other benefits that may be required by collective bargaining agreements or other employment contract generally applicable to the classes of labor employed in the work.
(2) Bond premiums, property damage, liability and workmen's compensation insurance premiums, Unemployment Insurance contributions and Social Security taxes on the force account work.

In addition, the Contractor's fixed fee may include an amount, not to exceed 20 percent of **(b)**, 5 percent of **(d)** and 5 percent of **(e)**, with the exception of the portion chargeable to equipment as defined above.

(h) Compensation. The compensation, as set forth above, shall be received by the Contractor as payment in full for Change Order work done on a force account basis. At the end of each day, the Contractor's representatives and the Engineer shall compare records of the cost of work ordered on a force account basis.

(i) Statements. No payment will be made for work performed on a force account basis until the Contractor furnishes the Engineer duplicate itemized statements of the cost of the force account work with the following details:

(1) Name, classification, date, daily hours, total hours, rate, and extension for laborers and foremen.

(2) Designation, dates, daily hours, total hours, rental rate and extensions for each unit of machinery and equipment.
(3) Quantities of materials, unit prices and extensions.
(4) Transportation of materials.
(5) Verification of payments under **(i)(1)** shall be accomplished by presentation of copies of certified payrolls to the Engineer. Under **(i)(2)**, original invoices for rentals must be provided to the Engineer, if so requested. Requests for payment of costs for items under **(i)(3)** and **(i)(4)** shall be accompanied by original invoices for materials used and transportation charges. If the materials used in the force account work are not specifically purchased for such work, but are taken from the Contractor's stock, then in lieu of the original invoices, the statements shall contain or be accompanied by an affidavit of the Contractor which shall certify that the materials were taken from stock, that the quantity claimed was actually used and that the material and transportation costs claimed represent actual cost. Any request for payment under this Section should be submitted in the order outlined above.

GP-9.03 PROGRESS PAYMENTS

(a) Current Estimates

(1) **Lump Sum Contracts.** If requested by the Baltimore City Department of Transportation, the Contractor shall furnish an acceptable breakdown of the Lump Sum Contract price showing the amount included therein for each principal category of the work. The breakdown shall be in sufficient detail to provide a basis for estimating monthly progress payments.

(2) **Monthly Estimates.** Each month, the City will pay the Contractor for the Contract value of the work satisfactorily performed during the preceding calendar month, including authorized extras and additions, less 5%. The 5% of the total Contract value retained by the City will not be released until final payment unless partially released in a semi-final payment). Current estimates will be based upon the Engineer's estimate of work, including materials and/or equipment, complete in place, satisfactorily performed. For lump sum items, the Engineer's estimate shall be the proper fraction of the lump sum items satisfactorily performed during the preceding month. All quantities, estimates and fractions will be reasonably accurate approximations and are subject to correction, (a), in subsequent current estimates, (b), in any semi-final estimate, and (c), in final payment. Any and all partial payments may be withheld in the event requirements of the Specifications have not been complied with by the Contractor. Should the Engineer or the Contractor be of the opinion that any estimates, quantities and/or fractions (either as to an individual current estimate or accumulations thereof) do not represent a reasonably accurate approximation of actual work, then details questioned shall be reviewed and any modifications will be incorporated in the next estimate.

(3). **Retained Funds.** For the purpose of this Contract, Section TC-7.05 PROGESS PAYMENTS, Subsection (a) Current Estimate, Paragraph (3) Variable Retainage of the State Specifications will not apply. The Contract value of work satisfactorily performed during the preceding calendar month will be paid to the Contractor, less 10%. When such 10% Retainage amounts to 5% of he total contract value, plus authorized extras and additions, no further Retainage will be deducted from the monthly payments due the Contractor. Pursuant to the City of Baltimore Guidelines for the Performance Evaluation of Design Consultants and Construction Contractors, a Contractor achieving two consecutive "A" evaluations can request that the retainage for the Contract be reduced from 5% to 1.5% at the 50% payment earned (excluding stored material) milestone. The request shall be accompanied by a document from the Surety indicating approval of said reduction. A Contractor shall remain eligible for this reduction in retainage by maintaining an "A" rating. If a subsequent evaluation is less than an "A" rating. 10% monthly retainage shall re-commence until retainage again amounts to 5% of the Contract value. Retainage will not be released until final payment (unless partially released in a semi final payment). When the amount earned during any month or period, less the appropriate retained percentage shall be less than Five Hundred Dollars ($500.00). The

appropriate retained percentage shall be deducted from each and every estimate made under the entire Contract and shall be retained until final completion of all work covered by the Contract, notwithstanding any provision to the contrary that may appear in the Contract documents. Upon completion of the contract, retainage due will be paid to the Contractor to the extent which the Contract is entitled.

(b)Semi-Final Estimate Payments

(1) Upon completion of the project and the acceptance by the City of the project for maintenance, the City, at the Contractor's request and with consent of surety, will pay the Contractor, within 60 calendar days of said request, what is hereby known as a semi-final estimate payment. Such a semi-final estimate payment will be based upon **a)**, quantities the City has computed and set up as proposed final quantities and **b)**, a reasonably accurate estimate of those quantities for which the Baltimore City Department of Transportation has not yet completed computations. The quantities which the City sets forth as proposed final quantities shall be so designated. To arrive at the amount of semi-final estimate payment, there shall be deducted from the apparent estimated value of the Contract **a)**, the total of all amounts previously paid to the Contractor as current estimates and **b)**, sums deemed chargeable against the Contractor, properly deductible, including liquidated damages, and as a retainage, a sum not less than 1% of the total value of the Contract.

(2) In cases where there has been substantial completion of the project and there are only inconsequential or minor work items remaining such as painting, seeding, mulching, or planting to be completed and such items cannot be completed for an extended period of time because of seasonal or weather conditions, a semi-final inspection shall be made and if the work completed is found to be satisfactory by the Baltimore City Department of Transportation, then there shall be deemed to the Partial Acceptance on the entire project except for the uncompleted work. The City, within 60 days of Partial Acceptance, upon request of the Contractor and with consent of surety, shall pay to the Contractor, what is hereby known as a partial semi-final estimate payment. Such a semi-final estimate payment will be based upon **a)**, quantities the Baltimore City Department of Transportation has computed and set up as proposed final quantities and **b)**, a reasonably accurate estimate of those quantities for which the Baltimore City Department of Transportation has not yet completed computations. The quantities the Baltimore City Department of Transportation sets forth as proposed final quantities shall be so designated.

To arrive at the amount of semi-final estimate payment, there shall be deducted from the estimated value of the Contract **a)**, the total of all amounts previously paid to the Contractor as current estimates, and **b)**, sums deemed chargeable against the Contractor, properly deductible, including liquidated damages, and as a retainage, a sum equal to 1% of the total value of the Contract. (Said retainage is not to be less than $2,000).

At the time of final payment, any retainage due from the time of payment of the semi-final estimate shall be paid to the Contractor.

GP-9.04 FINAL ACCEPTANCE AND FINAL PAYMENT

(a) When the Contractor has completed a Contract and it has been accepted for maintenance in accordance with the provisions of **GP-5.13**, the Baltimore City Department of Transportation will promptly proceed:

(1) To make any necessary final surveys:
(2) To complete any necessary computation of quantities; and
(3) To submit to the Contractor, a tabulation of the proposed final quantities and a list of deficiencies which he is required to correct prior to the issuance of a materials clearance, within 60 days after final completion and acceptance of the project by the Engineer for maintenance. The tabulation will be accompanied by a statement setting forth the additional work performed under Change Orders

and/or supplemental agreements; the authorized extension of time; the number of days which have been charged against the Contractor as having been used to complete the Contract; and any deductions, charges or liquidated damages which have been made or imposed.

(b) The Contractor shall have ten calendar days, dating from the date upon which he receives the above mentioned tabulation from the Baltimore City Department of Transportation, in which to decide whether he will accept Final Payment upon such a basis and to notify the Baltimore City Department of Transportation, in writing, of his decision. The Contractor may request an additional period, up to ten calendar days, in which to notify the Baltimore City Department of Transportation of his decision.

If the Contractor notifies the Baltimore City Department of Transportation that he objects to Final Payment on such a basis, the notification shall outline the reasons for the objections.

(c) Upon receipt of a notification of acceptance as provided for in paragraph **(b)** above, final acceptance of a completed Contract will be contingent upon the following conditions:

(1) The Baltimore City Department of Transportation's acceptance for maintenance.

(2) The City's Materials Clearance Authorization.

When the above conditions have been met, the City will promptly proceed to prepare the Final Estimate and Final Payment forms and submit them to the Contractor. The forms shall show all data noted in Paragraph **(a)** above, together with deductions for all prior payments. The Contractor shall execute the forms and return them to the Baltimore City Department of Transportation within ten calendar days from the date they are received for execution and payment. If signed forms are not received by the Baltimore City Department of Transportation within the specified time, the Baltimore City Department of Transportation will prepare duplicate forms for execution and payment. Such action by the Baltimore City Department of Transportation shall be deemed to constitute acceptance and Final Payment

(d) If, under the provision of Paragraph **(b)** above, the Contractor notifies the Baltimore City Department of Transportation his objections and non-acceptance of the data submitted to him, the Baltimore City Office sportation shall pay the Contractor a semi-final estimate, or an additional semi-final estimate in the event a semi-final estimate has already been paid, based upon the data noted in Paragraph **(a)** above, with deductions for all prior payments. A retainage equal to 1% of the total value of the Contract shall be withheld by the Baltimore City Department of Transportation.

(e) In the event the Contractor does not accept the data submitted to him as described in Paragraph **(a)** above and/or has a claim outstanding filed in accordance with **GP-5.14**, the Engineer and the Contractor shall confer at mutually convenient times and endeavor to reconcile all points of disagreement expeditiously. If such reconciliation is accomplished, the Baltimore City Department of Transportation will promptly proceed with acceptance and Final Payment on the reconciled basis and in accordance with the provisions of Paragraph **(c)** above.

(f) If the reconciliation is not accomplished by the Contractor and the Engineer, and the Contractor is still not satisfied, the Contractor must pursue review of the Engineer's decision in accordance with **GP-5.15, "Disputes"**.

GP-9.05 LATE PAYMENTS

(a) Payments for semi-final estimates shall be made within 60 days of the date when the amount becomes due and payable as evidenced by the signature of the Chief, Department of Transportation.

Payments for final estimates shall be made within 30 days of the date when the Contract amount becomes due and payable as evidenced by the signature of the Director, Department of Transportation.

(b) A proper invoice shall include a description of the items or services provided, the date the goods were received or the inclusive dates the services were rendered, the Contract prices and retention, if any. It shall also include the basis for the billing, the Contract or Purchase Order number, the Contractor's Federal Tax Identification Number of Social Security Number and the name and address of the proper invoice recipient.

(c) For the purposes of this Contract, an amount will not be deemed due and payable if:

(1) The amount invoiced is inconsistent with the Contract.
(2) The proper invoice has not been received by the person or office specified in the Contract.
(3) The invoice, or performance under the contract, is in dispute or the Contractor has failed to otherwise comply with the provisions of the Contract.
(4) Items or services have not been accepted.
(5) The quantity of items delivered is less than the quantity invoiced.
(6) The items or services do not meet the quality requirements of the Contract.
(7) The Contract provides for progress payments and the proper invoice for the progress payment has not been submitted pursuant to the schedule contained in the Agreement.
(8) The Contract provides for withholding a retainage and the invoice is for the retainage and all conditions for release of the retainage have not been met.
(9) The Contractor has not submitted satisfactory documentation, or other evidence reasonably required by the Engineer or by the Contract, concerning performance under the Contract and compliance with its provisions.

TERMS AND CONDITIONS

TC SECTION 4
CONTROL OF WORK

TC-4.02 FAILURE TO ADEQUATELY MAINTAIN PROJECT

98 **ADD:** To the second paragraph.

Additionally, an appropriate deduction will be made from the Contractor's next progress estimate for each day or portion thereof that Maintenance of Traffic deficiencies exist, and will continue until the deficiencies are satisfactorily corrected and accepted by the Engineer. Any portion of a day will be assessed a full day deduction. The deduction will be equal to a prorata share of the lump sum price bid for Maintenance of Traffic or an amount prorated from the Engineer's estimate, whichever is more. The amount prorated will be the per diem amount established by using the working days (based upon calendar dates when required) divided into the total value of the bid item or the Engineer's estimate of that item, whichever is more.

The above noted deduction will be assessed on the next progress estimate if:

The Contractor does not take action to correct the deficiencies and properly assume the responsibilities of maintaining the project (as determined by the Engineer) within four hours of receiving a notice to comply with the required maintenance provisions.

The deduction will be equal to the daily prorated share of the lump sum price bid for Maintenance of Traffic or $1,000 per day, whichever is more for each day or portion thereof that the deficiencies exist, and will continue until the deficiencies and proper assumption of the required maintenance provisions are satisfactorily corrected and accepted by the Engineer. The amount of monies deducted will be a permanent deduction and are not recoverable. Upon satisfactory correction of the deficiencies, payment of the Maintenance of Traffic lump sum item will resume.

TERMS AND CONDITIONS
TC SECTION 5
LEGAL RELATIONS AND PROGRESS

TC – 5.01 INSURANCE

(a) General

DELETE

Maryland State Highway Administration
Deputy Chief Engineer-Office of Construction
707 North Calvert Street
Baltimore, Maryland 21202

INSERT

Mayor and City Council of Baltimore, Maryland
City Hall Room 207
Baltimore, Maryland 21202

TC-5.03 SUBCONTRACTING AND SUBCONTRACTORS

Subcontractors Prompt Payment. In accordance with 49 CFR 26.29.

The Contractor shall promptly pay a subcontractor any undisputed amount including retainage to which the Subcontractor is entitled for work under the Contract within 10 days of receiving a progress, semi-final or final payment in conformance with the latest edition of the State Finance and Procurement Article 15-226 of the Annotated Code of Maryland. The Administration has established the following time frame for subcontractor payment: When a progress, semi-final, or final payment is processed and payment is received by the Contractor, payment shall be made to all subcontractors within 10 days.

Each month, the Public Works Inspector will review the current pay items with the Contractor and all Involved subcontractors to ensure that all work satisfactorily completed in conformance with the Contract Documents is included in the monthly progress payment. For payment purposes, the same quantity totals used to compute the payment to the Contractor will be the basis for payment to the subcontractor.

If the Contractor withholds payment from a subcontractor beyond 10 days, the Contractor shall:

(a) Notify the subcontractor in writing and state the reason why payment is being withheld; and
(b) Provide a copy of the notice to the Public Works Inspector and the Program Compliance Officer.

If the subcontractor does not receive payment within the required 10 days, the subcontractor shall give written notice of nonpayment to the Public Works Inspector and the Program Compliance Officer. The notice shall:

(a) State the name of the Contractor, the Contract No., and the amount in dispute.
(b) Provide an itemized summary on which the amount is based; and
(c) If known, provide an explanation for any dispute concerning payment by the Contractor.

The Public Works Inspector will then notify the Program Compliance Officer, Construction (PCO) of the dispute. The PCO will verbally contact the Contractor within 48 hours to ascertain whether the amount withheld is an undisputed amount.

If the PCO determines that a part or all of the amount withheld is an undisputed amount, the PCO will instruct the Contractor to pay the subcontractor the undisputed amount within three days. The instructions will be confirmed in writing.

The PCO will verbally communicate to the subcontractor the results of the discussion with the Contractor and confirm the results in writing.

If the Contractor fails to pay the subcontractor the undisputed amount within the specified three days, the subcontractor may report the nonpayment in writing to the PCO.

Upon receipt of notification of nonpayment from the subcontractor, the PCO will schedule a meeting to verify and discuss the nonpayment issue. This meeting will be held at the Baltimore City Department of Transportation Office no later than 10 days after receiving notice from the subcontractor.

Invited to this meeting will be the Contractor, the subcontractor, the PCO, and the Public Works Inspector. The purpose of this meeting will be to establish why payment was not made to the subcontractor in the required time period. If it is determined that the Contractor is delinquent in payment to the subcontractor, further progress payments to the Contractor may be withheld until the subcontractor is paid.

If payment is not made to the subcontractor within seven days after the PCO determines that the Contractor is delinquent in paying the subcontractor and the next progress payment becomes due, the progress payment will not be processed and a second meeting will be held at the Baltimore City Department of Transportation to address the dispute. The second meeting will be held not later than five days after the close of the seven day period. If the results of this second meeting reveal that payment to the subcontractor continues to be delinquent, the PCO may order a suspension of work based upon the failure of the Contractor to carry out the provisions of the Contract or he may allow work to continue and withhold future progress payments as stated above.

In addition, the Department may require the Contractor to pay a penalty to the subcontractor, in an amount not exceeding $100 per day, from the date the payment was required.

A penalty will not be imposed for any period that the PCO determines the subcontractor was not diligent in reporting nonpayment in conformance with the Contract Documents.

The Contractor shall notify the PCO when payment has been made to the subcontractor. The PCO will verify the payment with the subcontractor to ensure payment was received.

A Contractor or subcontractor may appeal the decision of the Program Compliance Officer to the Chief Contract Administration who will render a final decision on this issue.

A decision of the Administration under these Terms and Conditions is not subject to judicial review or the provisions of COMAR 21.10.04.

Any administrative costs incurred by the Administration will be deducted from the Contractor's retainage at the conclusion of the project.

Nothing in this provision will prevent the subcontractor from pursuing a claim with the surety under the Contractor's payment bond at any time.

TERMS AND CONDITIONS

TC SECTION 6
RESTRICTIONS AND PERMITS

112 **DELETE:** TC 6.10 – RECYCLED OR REHANDLED MATERIAL in its entirety.

INSERT: The following.

TC 6.10 – RECYCLED OR REHANDLED MATERIAL.

Refer to 900.03 in the Contract Documents.

TERMS AND CONDITIONS

TC SECTION 6
RESTRICTIONS AND PERMITS

115 **DELETE:** TC-6.14 STORING MATERIALS AND EQUIPMENT ON/AGAINST STRUCTURES RESTRICTIONS in its entirety.

INSERT: The following.

TC-6.14 RESTRICTIONS FOR PLACING AND USING EQUIPMENT ON STRUCTURES, OR STORING MATERIALS ON/OR AGAINST STRUCTURES

Materials, and waste shall not be stored on or against any structure or structure element and equipment shall not be placed or used on any structure during the construction phase or finished or final configuration unless the written permission is obtained from the Administration's District Office and the Office of Structures for each type of material or equipment to be stored.

Loads, vehicle or other weight (materials etc.) that exceeds the bridge posted weight limit, if posted, or exceeds Maryland's legal vehicle loads on bridges, (with no posted bridge weight limits), are prohibited on the structure at any time, except as modified by the following. If the Contractor's intended operations will impose loads on the structure that exceed the weights listed above, the Contractor shall submit to the Engineer the type of material, its weight, the area that will be affected by the load, and its location on the structure. No stock pile of material regardless of unit weight shall be more than 4 ft high. If equipment is to be used, submit the maximum gross weight, axle spacing, load per axle, and proposed location on the structure. The maximum gross weight must include the vehicle weights in the most critical load position, i.e. front axle on crane with boom extended and element hanging. A special Hauling Permit is a requirement anytime equipment is moved over a structure that is over legal weight limit.

If any load requires evaluation, then a professional engineer registered in the State of Maryland and experienced in bridge design shall perform a load analysis to ensure that the load on the structure will not create an overstress condition on any bridge element. This analysis also includes effects of legal loads crossing the structure, if applicable. Analyses shall be submitted for review and loading cannot be imposed until written approval is received. Such submission does not guarantee acceptance by the Office of Structures, which reserves the sole right to accept or reject the proposed loading.

For structures under construction or rehabilitation, the Contractor shall also submit information pertaining to the phase of construction, such as which members have been modified or separated from the remainder of the structure, or have been newly constructed.

Any materials or equipment that would have a detrimental affect to the structure such as aluminum products placed against concrete surfaces shall be adequately protected to prohibit them from coming in contact with each other. Any discoloration or damage to the structure as a result of material or equipment being stored on/against the structure shall be removed or repaired.

CATEGORY 100
PRELIMINARY

PRE AND POST CONSTRUCTION SURVEY

DESCRIPTION. The Contractor and the Baltimore City Inspector shall be present to photograph the building walls and foundation (inside and outside) prior to construction. Existing structures are not to be undermined or damaged by construction activities, including vibrations.

Existing structures include all residences, buildings, structures, and retaining walls located within and adjacent to the limits of construction.

Prior to the commencing of any work, the Contractor together with the Baltimore City Inspector, shall make a detailed inspection of the buildings located at the following locations:

Central Avenue, from Eastern Avenue to Madison Street

CONSTRUCTION. Inspections will record the condition of all walls, floors, ceilings, and other structural elements as well as its contents and equipment that may be in place and pavements and sidewalks that may become subject to possible damage claims. The record shall consist of a written report including measurements and sketches, videotapes and photographs as required to fully delineate the extent of the deficiencies or lack of deficiencies.

1) Photographs shall be eight inches by ten inches (8"x10") in size and shall be in color and should include views both inside and outside of existing buildings.

2) A Notarized Statement certifying the date(s) this preconstruction survey was made shall be furnished by the Contractor to the Engineer. This certification shall include a statement that the preconstruction survey was made in the presence of and to the satisfaction of the respective owners or owner's representatives.

3) The written report and photographs for each existing structure shall be furnished to the Engineer.

Before any inspections are performed the Contractor shall notify the owners of the buildings or structures involved requesting their permission to enter upon said properties for the purpose of making these inspections for the protection of the owner.

In the event that access for the purpose of determining the conditions of the buildings and/or structures is refused by any owner, the Contractor shall notify the engineer in writing and may thereupon be relieved of the responsibility for making the survey with respect to the property to which access is denied.

The Contractor should, where possible, have the owner or a representative of the owner present during these inspections and should secure the signature of said owner/representative on the completed documents and submit a copy to said owner/representative.

A copy of all data relative to existing conditions of each respective property as found by the preconstruction survey shall be forwarded to each property owner. Two (2) identical copies shall be submitted to the Engineer.

Upon completion of the work on this project and prior to final acceptance of the work, the Contractor and the Baltimore City Inspector shall re-examine each property to determine any changes from the original conditions established by the preconstruction survey.

MEASUREMENT AND PAYMENT. Pre and Post Construction Survey will be measured and paid for at the Contract unit price Lump Sum, which shall be full compensation for notification of property owners, inspection, photographer, color photographs, preparation and submission of written reports, notarization, all copies provided to the property owners, and all labor, equipment and incidentals necessary to complete the preconstruction survey.

CATEGORY 100
PRELIMINARY

TEMPORARY TRAFFIC SIGNALS

DESCRIPTION. This work shall consist of furnishing and installing the necessary materials to maintain vehicular traffic signalization control at an intersection during all phases of construction. Based on the maintenance of traffic contract documents, alignment or adjustment of the temporary traffic signal system will be needed.

MATERIALS.

A. Class II Wood Poles shall conform to Section 800.17.
B. 12 Inch LED Polycarbonate Traffic Signal Heads shall conform to Section 814.
C. Sheet Aluminum signs shall conform to Section 810.
D. Electrical Cable shall conform to Section 810.
E. Conduit Riser & Weather Head shall conform to Section 805.
F. Steel Span Wire and Steel Tether Wire shall conform to Section 819.

CONSTRUCTION. Temporary traffic signals shall be in place and operational before the existing traffic signal is removed. The temporary traffic signal system shall maintain traffic signalization at the intersection during all maintenance of traffic phases. Relocation of signal structures, signs or traffic signal heads during maintenance of traffic phases may be necessary based on the Contract Documents.

MEASUREMENT AND PAYMENT. Temporary traffic signals will be paid for the Contract Lump Sum price. Payment will be full compensation for all labor, materials, equipment, tools and incidentals necessary to complete the work. Including but not limited to all necessary signal structures, wood poles, traffic signal heads, electrical cable, signal controllers, conduit, risers, weatherheads, steel span wire, banding sign to support, test pits, steel tether wire, signs, concrete for foundations and all labor necessary to relocate or adjust the temporary traffic signal between maintenance of traffic phases. Maintenance of Traffic for signal construction will be paid for under Item 127 Maintenance of Traffic. All ultimate traffic signal items will be paid for as specified in the contract documents.

CATEGORY 100
PRELIMINARY

SECTION 101 — CLEARING AND GRUBBING

101.03 CONSTRUCTION.

ADD:

101.03.09 When removing and disposing of trees and embedded stumps and roots, the Contractor shall exercise caution to avoid damage to the existing underground utilities, building structures, and sidewalk facilities including, but are not limited to, utility structures and poles, signs, and portable planters, etc. Any damages occurring to these items during the Clearing and Grubbing process shall be repaired by the Contractor, at his own expense, to the satisfaction of the Engineer.

101.04 MEASUREMENT AND PAYMENT.

ADD: After last paragraph:

> Payment for Clearing and Grubbing shall be full compensation for removal and disposal of all the existing trees (23 trees, sizes vary), tree stumps, tree roots and other vegetation in the existing tree pits as shown on the construction plans or as directed by the Engineer.

CATEGORY 100
PRELIMINARY

SECTION 103 — ENGINEERS OFFICE

103.03 CONSTRUCTION.

103.03.05 Requirements for all Offices.

144 **ADD:** the following after (v).

(w) One paper shredder capable of shredding at least 10 sheets (20 lb bond) at a time. Throat width of at least 12 in. Speed of at least 20 feet per minute. Auto reverse or auto stop for paper jams. Power of at least 115 v.

146 **DELETE: 103.03.09 Recyclable Materials (Paper, Bottles, Cans, Etc.)** in its entirety.

INSERT: The following.

103.03.09 Recycling. Recycling of recyclable paper (bond, newsprint, cardboard, mixed paper, packaging material and packaging), bottles (glass and plastic), and aluminum cans will be required at the Engineer's Office and the Contractor's facilities for the project.

Furnish approved containers, and remove the material from the site on an approved schedule or as directed. All material shall be taken to an authorized recycling facility. Maintain a log for the duration of the project documenting the type of materials recycled. The log shall include the types of material, date, time, location of facility, and signature line. Furnish a copy of the log at the completion of the project and upon request.

The Contractor shall be considered the owner of any profit and be responsible for all incurred costs.

CATEGORY 100
PRELIMINARY

SECTION 103 – ENGINEERS OFFICE

144 **DELETE:** 103.03.06 Microcomputer System for all Offices in its entirety.

INSERT: The following.

103.03.06 Computer System. Furnish __1__ desktop computers and __0__ laptop computers.

General Requirements.

(a) IBM compatible with an Intel or AMD processor.

(b) Minimum hard drive storage of 80 GB (gigabyte).

(c) One CD-RW drive (re-writable CD-ROM).

(d) Operating System. Minimum Microsoft® Windows XP PRO SP2. Must be a 32-bit operating system. (A 64-bit operating system is not compatible with some SHA software.) The computer system will not be acceptable unless all Microsoft Windows Critical Updates are installed.

(e) Printer. When an Engineers Office is specified, furnish a B&W laser jet printer with a minimum resolution of 1200 DPI (dots per in.), at least 8 MB of RAM, and a print speed of at least 15 PPM (pages per minute). Inkjets will not be accepted. (Note: A separate color inkjet printer shall be required if a digital camera is specified, refer to SP-Section 113).

(f) Software. Supply all manuals and software on original disks for retention in the Engineers Office or Administration facility for the duration of the Contract.

(1) Microsoft® Office 2007 Professional for Windows™ or later.

(2) Install and configure antivirus software to perform an automatic update when the microcomputer system connects to the internet. Antivirus software approved for Administration web email: *Norton, McAfee, Sophos, or ETrust.

(*Norton Internet Security includes Antivirus and a Personal Firewall).

(g) Internet Access. Provide unlimited internet service approved by the Engineer. Where available, provide internet high-speed service (DSL or cable). With DSL or cable internet service, provide an external router device. Provide firewall software to protect the computer from security intrusions.

(h) Accessories.

(1) When an Engineers office is specified, provide a standard computer workstation with minimum desk space of 60 X 30 in. and a padded swivel type chair with armrests.

(2) 8-1/2 X 11 in. xerographic paper as needed.

(3) Toner or ink for the printer as needed.

(4) Maintenance agreement to provide for possible down time.

(5) Physical security system to deter theft of the computer and components.

(6) Three 4-GB USB flash drive storage devices.

(7) Blank recordable CD-RW media as needed.

Desktop Specific Requirements.

(a) Minimum processor speed of 3.0 GHz.

(b) Minimum of 2 GB RAM (Random Access Memory).

(c) Enhanced 101 key keyboard with wrist rest.

(d) Super video graphics accelerator (SVGA).

(e) Mouse and mouse pad.

(f) Flat-panel LCD monitor (19 in. minimum) meeting Energy Star requirements.

(g) Uninterruptible power supply (UPS).

Laptop Specific Requirements.

(a) Must meet military standard of durability MIL-STD 810G

(b) Minimum processor speed of 2.4 GHz.

(c) Minimum 2 GB SDRAM.

(d) Minimum 15" 1024x768 (XGA), daylight-readable, 500nits (cd/m2) LCD display.

(e) Power Supply. Two lithium ion battery packs with overcharge protection, an AC adaptor, and a vehicle DC power adaptor that operates the laptop and simultaneously charges the laptop's internal battery.

(f) Carrying Case.

(g) Printer. When an Engineers Office is not specified, furnish a portable printer that meets the requirements specified above.

(h) Internet Service. If an Engineers office is not specified, furnish the laptop with an internal wireless broadband card and broadband internet service.

Have the computer system completely set up and ready for use on or before the day the Engineers office is to be occupied. When an Engineers office is not specified, have the computer system furnished complete and ready for use at least five days prior to beginning any work on the project.

If for any reason the system fails to operate, is stolen, or is otherwise unavailable for use, it shall be replaced or repaired within 48 hours.

When the computer system is no longer required, the Construction Management software system including original user/operator guide manuals, program disks, and all data files (including those stored on USB flash drives, CD-R's, etc.) will be removed by the Engineer and delivered to the District Engineer and become the property of the Administration. The remaining computer systems shall remain the property of the Contractor.

103.04 MEASUREMENT AND PAYMENT.

147 **ADD:** The following as a fourth paragraph.

Computer. The computer system will not be measured but the cost will be incidental to the Contract price for the Engineers Office item. If an item for Engineers Office is not specified, the cost of the computer system will be incidental to the payment for Mobilization. In absence of either item, payment will be incidental to the other items specified in the Contract Documents.

ADD: After last paragraph:

The payment for the Engineer's Office shall also include payment for furnishing and installation of Project Identification Signs.

The Contract Lump Sum price will also include for the Engineer's Office to remain for Two (2) months, fully operational, after the Final Inspection.

CATEGORY 100
PRELIMINARY

SECTION 104 — MAINTENANCE OF TRAFFIC

104.01 TRAFFIC CONTROL PLAN (TCP)

104.01.01 DESCRIPTION.

149 **DELETE:** The fourth paragraph sentence "Refer to contract Documents for Work Restrictions." in its entirety.

INSERT: The following.

Work Restrictions. The Engineer reserves the right to modify or expand the methods of traffic control or working hours as specified in the Contract Documents. Any request from the Contractor to modify the work restrictions shall require written approval from the Engineer at least 72 hours prior to implementing the change. The Contractor shall submit a copy of the original work restrictions with the written request.

Work is not permitted on the holidays, or work day preceding and following holidays indicated below with an "X":

- ☒ New Year's Day, January 1
- ☒ Martin Luther King's Birthday, the third Monday in January
- ☒ President's Day, the third Monday in February
- ☒ Good Friday
- ☒ Easter Weekend
- ☒ Memorial Day, the last Monday in May
- ☒ Independence Day, July 4
- ☒ Labor Day, the first Monday in September
- ☒ Columbus Day, the second Monday in October
- ☒ Veteran's Day, November 11
- ☒ Thanksgiving Day, the fourth Thursday in November
- ☒ Christmas Day, December 25

TEMPORARY LANE OR SHOULDER CLOSURE SCHEDULE			
ROADWAY	**# LANE(S) / SHOULDER CAN BE CLOSED**	**DAY OF THE WEEK**	**CLOSURE PERIOD (TIME OF DAY)**
SEE TRAFFIC CONTROL PLANS			

149 **ADD:** The following after the last paragraph, "Any monetary savings...and the Administration."

When closing or opening a lane on freeways, expressways, and roadways with posted speed ≥ 55 mph, a work vehicle shall be closely followed by a protection vehicle (PV) during installation and removal of temporary traffic control devices. The PV shall consist of a work vehicle with approved flashing lights, either a truck-mounted attenuator (TMA) with support structure designed for attaching the system to the work vehicle or a trailer truck-mounted attenuator (TTMA) designed for attaching the system to the work vehicle by a pintle hook and an arrow panel (arrow mode for multilane roadways and caution mode on two-lane, two-way roadways).

The work vehicle size and method of attachment shall be as specified in the TMA/TTMA manufacturer's specification as tested under NCHRP and/or MASH Test Level 3.

When a temporary lane or shoulder closure is in effect, work shall begin within one hour after the lane is closed. Any delay greater than one hour with no work in progress shall require the Contractor to remove the lane closure at no additional cost to the Administration. The Contractor's Traffic Manager shall attend Pre-Construction and Pre-Paving Meetings and shall discuss traffic control and the Traffic Control Plan including procedures to be implemented for lane closures.

All closures shall be in conformance with the approved TCP and under the direction of the Contractor's Traffic Manager and the Engineer.

Workers and equipment, including temporary traffic control devices needed for setting up a lane closure or restriction, are prohibited in the lane or shoulder to be closed or restricted before the time permitted in the Contract work restrictions unless otherwise noted below or as approved by the Engineer.

Temporary traffic control devices to be used for lane/shoulder closure may be placed on the shoulder of the roadway by workers no earlier than 30 minutes prior to actual time lane/shoulder closure or restriction is permitted. When temporary traffic control devices are being installed, all work vehicles involved in the installation shall display flashing lights that provide a 360-degree visibility of the vehicles. These lights shall remain on until the full installation of TTC devices is complete. Temporary traffic signs may be displayed to traffic at this time.

Workers shall not enter a lane open to traffic. Workers may be present on shoulders to prepare for lane closure setup no earlier than 30 minutes prior to actual time lane/ shoulder closure or restriction is permitted. During preparation for the lane closure, all work vehicles present at the site and involved in the installation of the lane closure or restriction shall display flashing lights that provide 360-degree visibility of the vehicles. These lights shall remain on until the full implementation of the road closure or restriction is complete.

All temporary lane or shoulder closures shall be restored at the end of the closure period and no travel lane shall be reduced to less than 11 ft on expressways, freeways and 10 ft on other roadways. Prior to opening the closed lane or shoulder, the Contractor shall clear the lane or shoulder of all material, equipment, and debris.

Failure to restore full traffic capacity within the time specified will result in a deduction being assessed on the next progress estimate in conformance with the following. This is in addition to the requirements specified in TC-4.02.

ELAPSED TIME, MINUTES	DEDUCTION
1 - 5	$ 50.00
Over 5	$ 50.00 per Minute (In addition to the Original 5 minutes)

CATEGORY 100
PRELIMINARY

SECTION 104 — MAINTENANCE OF TRAFFIC

104.07 ARROW PANEL (AP).

104.07.01 DESCRIPTION.

159 **DELETE:** The second and third paragraphs "Furnish APs that are.....units unless otherwise specified" and "APs shall have both .....dimmer device is operational.

104.07.03 CONSTRUCTION.

160 **ADD:** The following after the first paragraph.

Furnish APs that are self-contained, vehicle-mounted or portable, and approved. Use self-contained trailer units unless otherwise specified.

Provide APs that have both manual and automatic dimmer devices capable of reducing the light intensity by 50 percent. Periodically clean the photocells in order to prevent malfunctioning of the brightness control. Dimmer devices are mandatory during night operation. The devices shall include a fail-safe system that ensures maximum brightness during daytime operations and a reduction in brightness of up to 50 percent during periods of darkness, regardless of which dimmer device is operational.

The AP's shall provide full illumination within at least a 24-degree cone perpendicular to the panel face.

Power Supply. The AP shall operate from a solar powered electrical system and consist of battery power and solar array panels, and be capable of providing power supply to the AP for 21 consecutive days without auxiliary charge.

ADD: The following after the Arrow Panel Lamp Options table.

Arrow Board Type	Minimum Size	Minimum Legibility Distance	Minimum Number of Elements
A	48x24 in.	½ mile	12
B	60x30 in.	¾ mile	13
C	96x48 in.	1 mile	15
D	None*	½ mile	12

* Length of arrow equals 48 in. width of arrowhead equals 24 in.

DELETE: (b) "Aim the AP at approaching.....that the display is level".

INSERT: (b) "Aim the AP at approaching traffic in conformance with the minimum legibility distances specified above. Ensure that the display is level".

CATEGORY 100
PRELIMINARY

SECTION 104 — MAINTENANCE OF TRAFFIC

166 **DELETE**: Section 104.11 TEMPORARY PAVEMENT MARKINGS. in its entirety.

INSERT: The following.

104.11 TEMPORARY PAVEMENT MARKINGS.

104.11.01 DESCRIPTION. Furnish, install, and remove temporary pavement markings as specified in the Contract Documents or as directed by the Engineer. These markings shall include lines, letters, numbers, arrows, and symbols.

104.11.02 MATERIALS.

Removable Preformed Pavement Marking Material	Refer to the
Nontoxic Lead Free Waterborne Pavement Markings	Contract Documents
Black Out Tape	QPL

104.11.03 CONSTRUCTION.

104.11.03.01 Quality Assurance/Quality Control. Quality control testing shall be completed by the Contractor's Administration certified technicians. The Engineer will complete the quality assurance checks in conformance with MSMT 729 by performing the Nighttime Visibility Evaluations.

104.11.03.02 Warranty Period. The Contractor shall maintain and be responsible for any defects in the pavement markings for a period of 180 days from the date of application. The Contractor shall replace the pavement markings as necessary within this period as directed by the Engineer at no additional cost to the Administration. Refer to GP-5.11.

104.11.03.02 Application and Removal. The pavement markings shall be applied in conformance with the manufacturer's recommendations and the Contract Documents. Markings shall be applied in the same direction as the flow of traffic. The markings shall be located as specified in the Contract Documents or as directed by the Engineer.

Pavement markings may be applied to either new or existing paved surfaces. When applied to newly paved surfaces, the markings shall be placed before traffic is allowed on the pavement. Nontoxic lead free waterborne pavement markings shall be used for all temporary pavement markings except for the final surface. However, the Contractor may use removable preformed pavement markings at no additional cost to the Administration.

When at the "end of season", the temperatures are too low to allow the placement of removable tape on the final surface, a written exception request may be submitted to the Engineer to allow the use of nontoxic lead free waterborne paint in lieu of removable tape until the following striping season.

When it is appropriate to shift lanes, all nonapplicable pavement markings within the travel way and adjacent to the travel way as directed by the Engineer shall be completely removed.

Surface Condition. Prior to application of pavement markings, the pavement surface shall be clean, dry, and free of all contaminants, including curing compound, dirt, and loose particles. Residual pavement markings shall be removed. Loose or poorly constructed markings shall also be removed.

Pavement Marking Removal. All removable preformed pavement markings shall be completely removed prior to application of the permanent markings. On stage construction or final surfaces of portland cement concrete pavements, any objectionable adhesive residue shall be removed by water blasting or other methods as may be approved by the Engineer. Open flame is prohibited to remove adhesive residue, or any pavement markings. The Contractor shall remove all nonapplicable pavement markings so that there is no damage to the existing or final surface.

Retroreflectance. The initial retroreflectance readings for temporary pavement markings shall be a minimum of 250 and 150 millicandellas/lux/square meter for white and yellow, respectively. The Engineer will monitor the pavement markings in conformance with MSMT 729 during the Contractor's 180 day period of responsibility.

104.11.04 MEASUREMENT AND PAYMENT. Payment for Removable Preformed Pavement Markings, Removal of Removable Preformed Pavement Markings, Nontoxic Lead Free Waterborne Pavement Marking Paint, and the Removal of Existing Pavement Markings will be measured and paid for using one or more of the items listed below and as specified in the Contract Documents.

The payment will be full compensation for furnishing, placing, complete removal of lines, letters, numbers, arrows, symbols, and the removal of all residue. In addition, payment will cover maintenance and replacement during the 180 day period, and for all material, labor, equipment, tools, and incidentals necessary to complete the work. Removal and replacement of temporary pavement markings required beyond the 180 day period will be measured and paid for at the Contract unit price for the pertinent temporary pavement marking item.

Temporary markings replaced during the 180 day period as a result of plowing (as determined by the Engineer) will be paid for at the Contract unit price for the pertinent temporary marking item.

(a) Nontoxic Lead Free Waterborne Pavement Marking Paint-in width specified-per linear foot.

(b) Removable Preformed Pavement Line Markings-in width specified-per linear foot.

(c) Removable Preformed Letters, Symbols, Arrows, and Numbers per each.

(d) Removal of Removable Preformed Pavement Markings-any width-per linear foot.

(e) Removal of Removable Preformed Letters, Symbols, Arrows and Numbers per each.

(f) Removal of Existing Pavement Line Markings-any width per linear foot.

(g) Removal of Existing Letters, Symbols, Arrows, and Numbers per each.

(h) Black Out Tape Lines-in width specified-per linear foot.

(i) Removal of Black Out Tape Lines-any width-per linear foot.

CATEGORY 100
PRELIMINARY

SECTION 104 — MAINTENANCE OF TRAFFIC

104.12 DRUMS FOR MAINTENANCE OF TRAFFIC.

104.12.02 MATERIALS.

169 **ADD:** The following to the end of the first paragraph.

Drums may include recycled plastic content. The drum base may contain up to 100 percent recycled content.

104.12.03 CONSTRUCTION.

ADD: The following to the end of the third paragraph.

Damaged drums shall be recycled to the extent possible. The disposition of the damaged drums shall be provided prior to payment for any replacement drums.

104.12.04 MEASUREMENT AND PAYMENT.

ADD: The following to the end of the second paragraph.

A disposition as specified in 104.12.03 is required prior to payment.

CATEGORY 100
PRELIMINARY

SECTION 104 — MAINTENANCE OF TRAFFIC

104.14 CONES FOR MAINTENANCE OF TRAFFIC.

104.14.02 MATERIALS.

171 **DELETE:** First paragraph on this page "Cones shall be...an upright position".

INSERT: The following.

All cones shall meet MdMUTCD and be new or like new condition. All cones shall be orange in color. Cones shall be at least 28 in. high, 10 in. diameter at the inside of the base, and reflectorized with two white retroreflective stripes. The top stripe shall be 6 in. wide and located 3 to 4 inches from the top of the cone. The second stripe shall be 4 in. wide and located 2 inches below the top band.

Tall-Weighted Cones. When specified, tall-weighted cones shall be at least 42 in. high and 7 in. diameter at the inside of the base. Tall-weighted cones shall be manufactured of low density polyethylene (LDPE) and have four high performance wide angle white and orange retroreflective stripes. The stripes shall be horizontal, circumferential and 6 in. wide. Alternate stripe colors with the top stripe being orange. Any nonretroreflective spaces between the orange and white stripes shall not exceed 1/2 in.

104.14.03 CONSTRUCTION.

ADD: The following after the first paragraph "The Contractor's name...away from traffic".

Equip all cones with approved weights or anchor collars, (15 lb maximum) as needed to maintain an upright position. Anchor collars shall fit to the base of the cone. For tall-weighted cones use anchor collars weighing 10 to 30 lb.

CATEGORY 100
PRELIMINARY

TEMPORARY ORANGE CONSTRUCTION FENCE

SECTION 104.20 – TEMPORARY ORANGE CONSTRUCTION FENCE

104.20.04 MEASUREMENT AND PAYMENT

DELETE: The third paragraph.

INSERT: The following:

This item will be paid as a single one time payment for the actual length of installed fence. The resetting, normal daily maintenance and final removal of the Temporary Orange Construction Fence as many times as necessary to complete the planned construction activities/stages will not be measured but will be incidental to the original furnish and install per linear foot bid price. The replacement of damaged fence (ie. vandalism, contractor's operations, theft, etc.) with new or like new material also will not be reimbursed but is to be included in the original linear foot bid price.

CATEGORY 100
PRELIMINARY

SECTION 104 — MAINTENANCE OF TRAFFIC

104.21 CELLULAR T ELEPHONES.

104.21.01 DESCRIPTI ON. Furnish and maintain new or like new cellular telephones for use by the appropriate Administration personnel. Each telephone shall be furnished with a hands-free device and be delivered to the Engineer at time of Notice to Proceed, fully activated and operational. They shall remain operational until returned to the Contractor at final acceptance of the entire project in conformance with GP-5.13.

104.21.02 MATERIALS.

Cellular Telephones	As approved by the Engineer

104.21.03 CONSTRUCTION. Not applicable.

104.21.04 MEASUREMENT AND PAYMENT. The number of cellular telephones required for this Contract is _2_. The cellular telephones will not be measured but will be incidental to the Contract price for the Engineers Office item. If an item for Engineers Office is not specified, payment for the cellular telephones will be incidental to the payment for Mobilization. In the absence of either item, payment will be incidental to the other items specified in the Contract Documents. The payment will be full compensation for furnishing the telephones and hands-free devices, activation fees, battery replacement, monthly service fees, extended coverage charges, air time (peak and nonpeak time per minute), roaming rates, long distance fees in conformance with the schedules provided, and for all material, labor, equipment, tools, and incidentals necessary to complete the work. If any of the telephones become defective, are stolen, or for any other reasons do not function as intended, they shall be replaced in-kind at no additional cost to the Administration. Nonfunctioning or stolen telephones shall be replaced within eight hours after the Contractor is notified by the Engineer.

Ownership of the telephones will remain with the Contractor. The Administration assumes no responsibility or liability for the condition of the telephones when they are returned.

CATEGORY 100
PRELIMINARY

SECTION 104 — MAINTENANCE OF TRAFFIC

104.31 ACCESSIBLE PEDESTRIAN MAINTENANCE OF TRAFFIC.

104.31.01 DESCRIPTION. Provide and maintain an accessible pedestrian route, to the "maximum extent feasible", throughout the project's limits. When an existing pedestrian access route within the public right of way is blocked by construction, alteration, or maintenance activity, an alternate accessible pedestrian route shall be provided.

The phrase to the "maximum extent feasible" applies in areas where the nature of an existing facility or site conditions makes it virtually impossible to comply fully with applicable accessibility standards through a planned alteration. In these circumstances, the alternate accessible pedestrian route shall provide the maximum physical accessibility that is feasible, or a design waiver must be approved by SHA's Office of Highway Development.

104.31.02 MATERIALS. Not applicable

104.31.03 CONSTRUCTION. The following considerations shall be taken into account when addressing accessible pedestrian maintenance of traffic:

(a) All pedestrians, including persons with disabilities, shall be provided with a reasonably safe, convenient and accessible path that replicates as much as practicable the existing pedestrian facilities.

(b) The width of the existing pedestrian facility should be maintained if practical. When it is not possible to maintain a minimum width of 60 in. throughout the entire length of the pedestrian route, a minimum width of 36 in. shall be provided with 60 x 60 in. passing zones at least every 200 ft, to allow individuals in wheelchairs to pass.

(c) Traffic control devices and other construction materials and features shall not intrude into the usable width of the sidewalk, temporary pathway or other pedestrian facility.

(d) Signs and other devices mounted lower than 7 ft above the temporary pedestrian pathway shall not project more than 4 in. into accessible pedestrian route.

(e) A smooth, continuous hard surface shall be provided throughout the entire length and width of the pedestrian route throughout construction. There shall be no curbs or vertical elevation changes greater than 1/4 in. in grade or terrain that could cause tripping or be a barrier to wheelchair use. Vertical elevation differences between 1/4 in. and 1/2 in. shall be beveled at a maximum 2:1 slope.

(f) When channelization is used to delineate a pedestrian pathway, a continuous detectable edging should be provided throughout the length of the facility such that pedestrians using a white cane can follow it. Edging should protrude at least 6 in. above the surface of the sidewalk or pathway with the bottom of the edging a maximum of 2.5 in. above the surface

(g) Temporary ramps shall be provided when an alternate pedestrian route crosses a curb and no permanent ramps are in place. The width of the ramp shall be a minimum of 36 in. and the slope of the ramp shall not exceed 12:1. Temporary detectable warning mats must be installed at street crossings and signalized entrances.

(h) When possible, an accessible pedestrian route shall be provided on the same side of the street as the disrupted route. When it is not feasible to provide a same-side accessible pedestrian route an accessible pedestrian detour route shall be provided.

(i) Information regarding closed pedestrian routes, alternate crossings, and sign and signal information shall be communicated to pedestrians with visual disabilities by providing devices such as audible information devices, accessible pedestrian signals or barriers and channelizing devices that are detectable to the pedestrians traveling with the aid of a white cane or who have low vision.

(j) It is desirable that pedestrians cross to the opposite side of the roadway at intersections rather than mid-block. Appropriate signing shall be placed at the intersections.

(k) Access to transit stops shall be provided and maintained at all times.

104.31.04 MEASUREMENT AND PAYMENT. Unless otherwise specified, Accessible Pedestrian Maintenance of Traffic will not be measured but the cost will be incidental to the Lump Sum item for Maintenance of Traffic. The payment will be full compensation for all materials, labor, equipment, tools, and incidentals necessary to complete the work.

CATEGORY 100
PRELIMINARY

SECTION 113 — DIGITAL CAMERA

113.01 DESCRIPTION. Furnish and maintain new or like new digital cameras for use by Administration personnel. Furnish one color inkjet printer. The digital cameras and printer shall be delivered to the Engineer at the time of the Notice to Proceed. They shall remain operational and not be returned to the Contractor until final acceptance of the entire project, in conformance with GP-5.13.

113.02 MATERIALS.

(a) Digital Camera. Each digital camera shall meet the following requirements and be furnished with the specified accessories:

(1) Windows XP PRO XP2 compatible operating system.

(2) Photo Suite, Photo Deluxe, Picture Works, Photo Shop, or similar Photo Managing Software.

(3) 4.0 megapixel image resolution (minimum).

(4) 3X optical zoom (minimum).

(5) Two (2) sets of rechargeable batteries.

(6) SmartMedia Card or memory stick (2 GB minimum).

(7) Pop-up or built-in flash modes.

(8) All items required for quick downloading.

(9) Auto-quick focus.

(10) Lens Cover, Shoulder Strap, and Carrying Case.

(11) AC adapter and Battery Charger.

(b) Color Inkjet Printer. The printer shall conform to the following minimum requirements:

(1) Resolution of 2400 x 1200 DPI (dots per inch).

(2) Print speed of 17 PPM (pages per minute) for black and white and 13 PPM for color.
(3) Memory 8 MB.

(4) Duty cycle of 5000 pages/month.

Office-jets and Bubble-jets will not be accepted.

113.03 CONSTRUCTION. Not applicable.

113.04 MEASUREMENT AND PAYMENT. The number of digital cameras required for this project is __1__. The digital cameras and printer will not be measured but the cost will be incidental to the Contract price for the Engineers Office item. If an item for Engineers Office is not specified, payment will be incidental to the payment for Mobilization. In the absence of either item, payment will be incidental to the other items specified in the Contract Documents. If a digital camera or printer becomes defective, is stolen, or for any other reason does not function as intended, it shall be replaced with an approved camera or printer at no additional cost to the Administration. A nonfunctioning or stolen camera or printer shall be replaced within 5 days after the Engineer notifies the Contractor.

Ownership of the cameras and printer will remain with the Contractor. The Administration assumes neither responsibility nor liability for the condition of the camera when returned.

CATEGORY 100
PRELIMINARY

SECTION 114 — TRUCK STAGING AREAS AND IDLING REQUIREMENTS

114.01 DESCRIPTION. Locate truck staging areas and avoid unnecessary idling of construction equipment in order to reduce engine emissions and to provide air quality benefits to those who live or work in or adjacent to the construction site.

114.02 MATERIALS. Not applicable.

114.03 CONSTRUCTION. Establish truck staging areas for all vehicles waiting to load or unload materials at the job site. Locate and submit for review staging areas where emissions will have the least impact on sensitive areas and the public.

The Administration will review the selection of staging areas, whether within or outside the existing highway right-of-way, to avoid locations near sensitive areas or populations to the extent possible.

Sensitive areas include, but are not limited to, hospitals, schools, residences, motels, hotels, daycare facilities, elderly housing and convalescent facilities. All sources of emissions shall be located as far away as possible from fresh air intakes, air conditioners, and windows. The Engineer will approve staging areas before implementation.

Idling of all mobile construction equipment, including delivery trucks, shall be limited to five minutes except under any of the following circumstances:

(a) When forced to remain motionless because of traffic conditions or mechanical difficulties over which the operator has no control.

(b) When necessary to operate defrosting, heating, or cooling equipment to ensure the safety or health of the driver or passenger.

(c) When necessary to operate auxiliary equipment that is located in or on the mobile source to accomplish the intended use of the mobile source.

(d) To attain the recommended operating temperature.

(e) When the outdoor temperature is below 32 F.

(f) When undergoing maintenance that requires operation for more than five consecutive minutes.

The above requirements do not prohibit the operation of an auxiliary power unit or generator set as an alternative to idle the main engine of a motor vehicle operating on diesel fuel.

114.04 MEASUREMENT AND PAYMENT. All methods and procedures required to comply with these requirements will not be measured for payment but will be incidental to the pertinent contract items.

CATEGORY 200
GRADING

SECTION 203 — BORROW EXCAVATION

203.01.02 Notice to Contractor —Borrow Pits.

225 **ADD:** After the first paragraph.

This project is located in BALTIMORE CITY. The following conditions applicable to the county or city shall be complied with and documented.

DISTRICT 1

Dorchester (DO) County
Site plan approved by Soil Conservation District.
Grading permit from County Highway Department (except City of Cambridge).
Planning and Zoning approval for use.
Critical Areas approval (if applicable).
Inspection by County.

Somerset (SO) County
Site plan approved by Soil Conservation District.
Grading Permit from the County.
Land Use permit.
Critical Areas approval by Planning and Zoning (if applicable).
Inspection by SHA.

Wicomico (WI) County
Site plan approved by Soil Conservation District.
Certificate of compliance with Planning and Zoning if located in Critical Area.
Inspection by SHA.

Worcester (WO) County
Site plan approved by Soil Conservation District.
Critical areas approved by Planning and Zoning (if applicable).
Inspection by SHA.

DISTRICT 2

Caroline (CO), Cecil (CE), Queen Anne's (QA) and
Talbot (TA) Counties
Site plan approved by Soil Conservation District.
Planning and Zoning approval.
Critical Areas approval (if applicable).
Inspection by SHA.

Kent (KE) County
Site plan approved by Soil Conservation District.
Grading permit.
Planning and Zoning approval.
Critical Areas approval (if applicable).
Inspection by SHA.

DISTRICT 3

Montgomery (MO) County
Sediment control permit and plan approval by County Department of Environmental Protection, Division of Water Resources Management, Storm Water Management Section/Sediment Control.
Approval by Maryland National Capital Park and Planning Commission (if applicable).
Inspection by County.

Prince Georges (PG) County
Site Plan approved by Soil Conservation District.
County Grading Permit.
Tree conservation plan approval by Maryland National Capital Park and Planning Commission (if applicable).
Critical Areas approval (if applicable).
Payment of all pertinent county fees and/or securing of county required bonding.
Inspection by SHA with oversight by County.

DISTRICT 4

Baltimore (BA) County
Site Plan approved by the Department of Environmental Protection and the Soil Conservation District.
County Grading Permit.
Critical Areas approval by the Department of Environmental Protection and Resource Management (if applicable).
Inspection by County.

Harford (HA) County
Site Plan approved by Soil Conservation District.
County Grading Permit.
Critical Areas approval (if applicable).
Inspection by County.

DISTRICT 5

Anne Arundel (AA) County
Site Plan approved by Soil Conservation District.
Planning and zoning approval - special exception required.
Grading plan issued by the County Department of Inspections and Permits.
Critical Areas approval (if applicable).
Inspection by County and SHA.

Calvert (CA) County
Site Plan approved by Soil Conservation District.
Grading plan issued by the County after a mining permit or exemption is issued.
Critical Areas approval (if applicable).
Inspection by SHA.

Charles (CH) County
Site Plan approved by Soil Conservation District.
Special exception granted by the County.
Critical Areas approval (if applicable).
Inspection by SHA.

St. Marys (SM) County
Site Plan approved by Soil Conservation District.
County Grading Permit.
Critical Areas approval (if applicable).
Inspection by SHA.

DISTRICT 6

Allegany (AL) County
Site plan approved by Soil Conservation District.
Informational copy of plans to County Planning and Zoning Commission.
Inspection by SHA.

Garrett (GA) and Washington (WA) Counties
Site plan approval by Soil Conservation District.
Inspection by SHA.

DISTRICT 7

Carroll (CL) County
Site plan approved by County Planning Commission.
Sediment control plan approval by Soil Conservation District.
County Grading Permit.
Inspection by County.

Frederick (FR) County
Site plan approved by Soil Conservation District.
County Grading Permit.
Inspection by SHA.

Howard (HO) County
Site Plan approved by Soil Conservation District.
County Grading Permit.
Inspection by County.

BALTIMORE CITY (BC)

Site plan approved Baltimore City Department of Public Works (BCDPW).
Inspection by BCDPW.

STATE AND FEDERAL PROPERTY

Borrow pits located on state and federal property are subject to Maryland Department of the Environment approval.
Inspection by SHA.

CATEGORY 200
GRADING

CONTINGENT SPECIAL EXCAVATION - RAILWAY AREA

DESCRIPTION. All existing railroad and streetcar tracks encountered within the contract limits of work shall not be disturbed except for those areas within the limits of utility work, sidewalk reconstruction and full depth pavement reconstruction as shown on the plans.

In general, the existing track sections to be removed are anticipated to be approximately 2.0+/- feet in depth, however, some sections may be deeper. In some areas, track sections may already be partially removed and /or covered by existing surface courses.

Special Excavation - Railway Areas shall include all excavation and disposal of material, regardless of the type of material encountered within the limits as detailed on the Plans, including the removal of existing pavement, base courses, rails, ties, ballast, concrete base and granite blocks.

This item shall only be used as directed by the Engineer.

MATERIALS. The backfill material shall be Crusher Run (CR-6) or Graded Aggregate - Base.

CONSTRUCTION. Before setting up Maintenance of Traffic the Contractor shall determine the location of the existing streetcar track rails. If the saw-cut required to construct utilities will conflict with these rails, the Contractor shall remove the portion of rail impacted by the future saw-cut and repair the hole in a manner satisfactory to the Engineer.

Special care shall be exercised to avoid disturbing existing utilities during the grading operation.

Excavated materials removed during the grading operations shall be disposed of promptly as unsuitable material in accordance with the requirements of Section 201.03.09, unless otherwise permitted by the Engineer and as noted below:

All rails and ties encountered shall be removed during grading operations and shall become the sole property of the Contractor. Existing rails shall be cut off at the limit of removal at no additional cost.

Granite paving blocks removed in excavation on this project shall be salvaged by the Contractor and remain the property of Baltimore City.

MEASUREMENT AND PAYMENT. Special Excavation – Railway Area will be paid for at the contract unit price per cubic yard for the material actually removed from within the limits specified. The payment shall constitute full compensation for all excavation, hauling and for disposing of excess and unsuitable materials, rails, ties, ballast and for all labor, materials,

equipment and incidentals necessary to complete the item. The Contractor is required to dispose of ties in accordance with all local, state, and federal laws and regulations.

Quantities for payment of Special Excavation – Railway Area will be computed by average end areas from cross sections of the original ground combined with cross sections of the completed work.

Cutting the ties shall be incidental to this item. Full depth saw cutting as described above shall be incidental to this item. The backfill material to the bottom of the sub-base, shall be incidental to this item.

CATEGORY 200
GRADING

VARIABLE DEPTH GRADED AGGREGATE BASE FOR BACKFILL

DESCRIPTION. Furnish and place graded aggregate base as backfill for excavation of unsuitable material below subgrade.

MATERIALS.

Graded Aggregate Base	901.01

CONSTRUCTION.

Grade Preparation - Cut the area where the graded aggregate base is to be placed to the depth shown or as directed. Bring the area to the specified line, grade, and cross section. Provide a grade that is smooth as practical and free of debris. Minimize construction traffic on the grade. Remove ruts by reshaping, but do not overwork the grade. Have the grade approved prior to placement of the graded aggregate base. Maintain adequate surface drainage as specified in 208.03.03.

Aggregate Placement - Place the graded aggregate base as specified in Section 501.

MEASUREMENT AND PAYMENT. Variable Depth Graded Aggregate Base for Backfill will be measured and paid for at the Contract unit price per cubic yard. The payment will be full compensation for all material, labor, equipment, tools, and incidentals necessary to complete the work.

CATEGORY 200
GRADING

PLANNING DOCUMENTS
SEGREGATION, TRANSPORTATION AND DISPOSAL OF CONTAMINATED SOIL
DISPOSAL OF CONTAMINATED WATER AND LIQUID

DESCRIPTION.

Construction activities under this contract require working with potentially contaminated material including soils and liquids, working in trenches, and potentially working in low oxygen or combustible atmospheres due to the presence of petroleum hydrocarbons and heavy metals. In addition to potential site hazards, the migration of contaminants offsite must be controlled. The Contractor shall utilize qualified professionals to develop and implement a site specific Health and Safety Plan (henceforth referred to in these Special Provisions as the "Plan") and shall use these Special Provisions as a guideline for developing said Plan. The Plan shall be submitted for any of his subcontractor's job specific health and safety plans, which describe in detail their safety precautions and procedures to be followed. The Contractor shall also be responsible for providing any personal protective equipment or engineering controls, as specified in the Plan, for the Contractor's employees and subcontractors.

The Plan shall require that all work be performed with strict adherence to all current applicable federal, state, and local regulations, including, but not limited to:

U.S. Department of Labor, Occupational Safety and Health Administration (OSHA)

Code of Federal Regulations (CFR) Title 29, Parts 1910 and 1926

Maryland Occupational Safety and Health (MOSH)

U.S. Department of Transportation (DOT)

NFPA 328 "Recommended Practice for the Control of Flammable and Combustible Liquids and Gases in Manholes, Sewers, and Similar Underground Structures"

All requirements of the Specifications as defined in the Construction section Paragraph (A) shall be used except as modified herein.

The Contractor shall locate, analyze, remove, dispose of, document, and provide all incidental services associated with the contaminated soil and groundwater encountered within the limits of disturbance and as described in this Special Provision. The Contractor shall inform the Engineer immediately when petroleum hydrocarbon and/or heavy metal contamination is encountered in groundwater or excavated soil in areas other than those previously discovered as part of the site

assessments. The Contractor shall inform the Engineer immediately when heavy metal or petroleum hydrocarbons contamination is encountered in groundwater or excavated soil at concentrations suspected to be greater than previously discovered (i.e. presence of free product (free-flowing petroleum), petroleum saturated soils, visually suspect presence of hexavalent chromium soils) or any other site activity that would trigger action levels established in the Plan and/or when a need arises to upgrade personal protective equipment, the procedures and contingencies of which shall be discussed in the Plan.

The 2003 Supplementary Site Investigation and the 1999 Phase II Site Investigation identified the presence/absence of petroleum hydrocarbon impact within the construction area. Soil sampling results reported the presence of petroleum hydrocarbon concentrations above MDE Non-Residential Cleanup Standards (>620 ppm) in soil samples collected in the vicinity of Station 7+00 (near S. Fleet Street) at a depth between 5 and 7 feet. Petroleum contaminated soils and groundwater were discovered in concentrations well below MDE action levels and may also be encountered in other construction areas.

Soil analytical results documented concentrations of heavy metals above the Maryland Department of the Environment (MDE) non-residential cleanup standards for barium, lead, mercury, and arsenic in several sample locations, as is typical with urban fill soils. Elevated concentrations were primarily limited to soil samples collected between 4 and 7 feet at Stations 7+00 and 12+00 and between 6 and 9.5 feet at Station 16+00. In addition, Polycyclic aromatic hydrocarbons (PAHs) above MDE non-residential cleanup standards were encountered in an isolated sample collected between 10 and 14 feet in the vicnity of Station 42+00, which can also be attributed to the urban fill soils. Site assessment results are available from the City.

Contractor shall contact MDE prior to initiation of work activities to verify that all procedures discussed in this document are still in accordance with current guidance and protocols.

MATERIALS.

The Contractor shall be responsible for providing to his employees and subcontractors, any personal protective equipment, monitoring equipment or materials required to implement engineering controls required for worker protection as specified in the Plan.

Strong plastic sheeting (minimum 6 mil construction), or equivalent material, shall be used to cover non-hazardous soil stockpiles.

If necessary, Contractor shall be responsible for providing inherit material to bind and/or solidify soil material so that it is no longer leachable and therefore suitable for transportation to a soil recycling facility. The material selected by the contractor must be pre-approved for use by the Engineer.

If dewatering is necessary and permitted discharges are required, Contractor shall provide all

materials necessary to comply with permitted discharge requirements.

CONSTRUCTION.

1. Health and Safety Plan. The Contractor shall establish and maintain a complete Plan for all operations and all personnel working or visiting the Site during construction activities. The Plan shall be reviewed and accepted by the Engineer prior to commencement of work. No construction activities are to commence prior to receipt of the Engineer's written acceptance of the Plan. Revision to the Plan may be required as work is conducted; however, all revisions must be reviewed and accepted by the Engineer before implementation. The Plan shall be prepared by a health and safety professional who is a Certified Industrial Hygienist (CIH), certified by The American Board of Industrial Hygiene (ABIH) for Comprehensive Practice. The Plan shall comply with all applicable construction and general industry standards and include a contingency for. It shall include:

    a. Chain of Command. The chain of command for reporting all emergencies and notifications to the Project Engineer as specified above shall be outlined in the Plan. In the case of an emergency, the Contractor's health and safety professional shall be responsible for instructing the Contractor's work crew, including subcontractors and notifying the onsite inspector. The onsite inspector representing the City of Baltimore shall be responsible for contacting the Engineer.
    b. Air Monitoring Equipment for Work Environments in which there is a Potential Risk of Exposure. Such equipment shall include, but not be limited to, a combustible gas indicator, a photo-ionization detector, a dust meter and an oxygen meter. All employees operating the air monitoring equipment shall be trained in accordance with OSHA 29 CFR 1910 which includes proper use, limitations, data interpretation and hazard alarm mechanisms. The operator of the monitoring equipment shall have completed a 40 hour course satisfying OSHA 29 CFR Part 1910.120 (e)(3)(i) initial training needs for individuals involved in hazardous substance removal and waste management of hazardous waste operations. The operator shall demonstrate to the Engineer sufficient expertise in equipment operation and interpretation of instrument readings. The operator shall also be in compliance with applicable refresher training. The Contractor will be required to document and provide to the City's onsite inspector all calibration records and recorded instrument readings at the intervals specified in the Plan.

    The monitoring devices shall be operated at the interval specified in the Plan in the areas as defined herein and on an as needed basis in all other areas, as determined by any one of the following: the Site Health and Safety Officer, the City Inspector or Engineer. If action levels established in the Plan are exceeded, appropriate response activities shall be implemented by the Site Health and Safety Officer as specified in the Plan.

c. Confined Space Entry. Confined space shall be addressed by the Plan. The determination as to whether a combustible, oxygen-deficient, or contaminant-saturated atmosphere exists shall be made by direct reading instrumentation as specified in Paragraph (1)(b). Confined-space may include, but not be limited to, excavations, tanks, manholes, and pipes. No person shall enter any confined space without obtaining an entry work permit issued by the Contractor's health and safety professional. Only persons trained in confined space entry and whose names appear on the work permit may enter the confined space. The entry work permit shall include the following minimal information:

1) location and description of work
2) workers assigned
3) entry time and date
4) hazards posed by work
5) hazards expected
6) fire safety precautions
7) personal safety
8) entry and emergency procedures
9) time period for which the permit is valid

All applicable procedures described in Title 29 CFR Part 1910.146 shall be incorporated into the Plan and followed.

d. Trench Excavations. The atmosphere in trenches shall be monitored in accordance with Paragraph (1)(b). Sheeting and shoring shall be provided in accordance with these Specifications. All applicable procedures described in Title 29 CFR Part 1926, Subpart P shall be incorporated into the Plan and followed.

e. Lockout/Tagout Procedures. Such procedures shall be used to ensure that the equipment and pipelines are isolated from all potentially hazardous energy and locked out or tagged before anyone performs any servicing or maintenance. The Contractor shall implement these procedures as needed, and specifically if any abandoned petroleum product pipelines are encountered during construction. If any petroleum product pipelines are encountered, the Contractor shall notify the Project Engineer immediately, since immediate notification to the appropriate State Agency (i.e. MDE) may be required. In addition, a protocol should be established in the Plan to address the discovery of petroleum pipelines (i.e. work stoppage, spill containment, etc.). The Contractor's Site Health and Safety Officer shall have the sole authority to lock out or implement a tag out system procedure. A lockout/tag out control log shall be maintained only by the Contractor's Health and Safety Officer. The log shall contain the following information:

1) Lock number
2) Location of pipeline to be locked out

3) Checkout time and date
4) Return time and date
5) Signature of authorized personnel

All applicable procedures described in Title 29 CFR Part 1910.147 shall be incorporated into the Plan and followed.

f. Hot Work Permit Procedures. In order to prevent ignition/explosion hazards of petroleum/air vapor mixtures, hot work should not be permitted unless it is documented by the monitoring equipment that the atmosphere is safe for these procedures.

1) burning equipment
2) welding equipment
3) brazing equipment
4) explosives
5) open fires
6) portable grinders
7) operation of internal combustion engines in a confined space
8) concrete buster
9) soldering irons and guns
10) explosive-activated tools
11) abrasive blasting
12) heavy equipment operation
13) or other flame-or-spark-inducing equipment or procedure

All applicable procedures described in Title 29 CFR Part 1910 and Part 1926 shall be incorporated into the Plan and followed.

g. Personal Protective Equipment for Chemical Hazards. The minimum level of personal protection used in daily field operations shall be specified in the Plan and may include Level D PPE, including long pants, hard hat, steel toe reinforced boots, safety glasses, and work gloves. Personal protective equipment shall be used in accordance with OSHA 29 CFR 1910 and 29 CFR 1926 and as specified in the Plan. All personal protective equipment shall meet or exceed the requirements outlined in 29 CFR 1910 and 29 CFR 1926. Levels of personal protective equipment on the site will be specified in the Plan based on job task and may include use of nitrile or other similar hand protection. The Contractor shall provide to all site workers personal protective equipment necessary to upgrade to the next highest level of protection, should hazard conditions change.

Face shields shall be used by all site workers whose job tasks may present a splash hazard. Only OSHA- and ANSI- approved eye wear is acceptable for use.

Where a potential respiratory hazard exists, the Contractor shall provide proper protection to affected workers, including confined space entry personnel, equipment operators, authorized site visitors, and monitoring personnel. Work atmospheres that may require respiratory protection include, but are not limited to, those contaminated by dust, fumes, and toxic gases. Respiratory equipment shall be inspected daily during regular use and weekly during non-regular use periods. Workers shall demonstrate to the Site Health and Safety Officer that they have been instructed on proper fit and use, maintenance procedures for equipment, and warning signs of respiratory environments where it has been determined that respiratory protection is necessary prior to work start. Ambient air monitoring shall be conducted by trained employees at intervals specified in the Plan.

No long, freely-flowing hair is permitted in areas where a hazard of entanglement exists. Long hair may be secured under a hard hat. Beards are not allowed to be worn by employees who are required to wear respirators.

Workers on the job site shall wear clothing appropriate to the job task. Clothing saturated with foreign substances, such as petroleum products, solvents, or other contaminants shall be removed and replaced immediately. That clothing should be cleaned or properly discarded as soon as possible. Any garments that will not be discarded shall be laundered separately to prevent the spread of contamination.

If disposable protective clothing, such as coveralls, gloves, or boots, is used by site workers if required by the Plan, procedures for decontamination and receptacles for disposal shall be provided by the Contractor. If site hazards are determined to involve "hazardous waste", contaminated clothing requiring hazardous waste disposal shall be hauled to an approved disposal facility by a U.S. DOT licensed hazardous waste hauler. Personnel decontamination areas shall also be provided by the Contractor. If reusable protective clothing is used, equipment and personnel decontamination stations shall be provided on site by the Contractor.

h. Flammable Materials Handling. Appropriate chemical-resistant clothing, and other personal protective equipment, including but not limited to gloves and steel toe reinforced boots, shall be provided by the Contractor to each worker required to handle flammable liquids, such as petroleum products or wastes. Respiratory protection shall be provided to employees working in hazardous atmospheres. Firefighting equipment consisting of, at a minimum, a fire extinguisher specific to the types of chemical hazards present shall be provided for each work crew involved in the flammable materials handling. To minimize the potential for explosion or fire hazards, firefighting equipment should be selected to minimize the generation of static electricity upon discharge.

The Contractor shall make provisions for the prompt and safe removal and disposal of any leaked or spilled product by a DOT or MDE approved hazardous materials hauler. Bonding facilities for protection against sparks during handling shall be provided where Class 1 liquids are involved. Due to the presence of potentially hazardous or flammable atmospheres, no smoking shall be permitted within 200 feet of the active work zone including during flammable liquid transfer, loading, or unloading. No smoking shall be permitted within 200 feet of any dust monitors, to avoid interference with the monitoring results. Non-sparking tools are required unless the atmosphere is continuously tested and remains free of vapors.

i. Emergency Procedures. Emergency procedures shall be specified in the Plan and shall include any situation where outside help is needed, such as the Police, Fire Department, Ambulance, Poison Control, or Emergency Medical Services. Emergency procedures are generally dictated by site specific conditions and, therefore, shall be discussed in detail in the Plan. An emergency shall also include discovery or release of free product in the work zone, worker injury, or worker exposure above the permissible exposure limits (PELs) defined in the Plan. All emergencies shall be dealt with in a manner to minimize continued or increased risk of exposure to site workers and the public. Pre-work emergency procedure briefings are to be held daily by the Contractor's Site Health and Safety Officer on the work site. The Contractors' monitoring personnel shall immediately report all emergencies following the Chain of Command as outlined in the Plan.

The Plan shall address the following provisions:

1) Emergency communications systems
2) Hospital name, address, and map showing route from site
3) Rescue personnel and equipment on site
4) Rescue training of site personnel
5) Location of nearest on-site telephone
6) Location of nearest first aid kit

In the event of an emergency in which a worker has potentially been exposed to a chemical hazard above the PEL specified in the Plan, the Contractor shall arrange for immediate medical screening for possible exposure to onsite hazardous materials or wastes. Subsequent monitoring, as a result of this exposure, shall be dictated by the industrial hygienist or attending physician.

After reassignment of work responsibilities, where the worker's risk of exposure is eliminated or significantly reduced, a follow-up screening shall be performed. This exam shall be conducted only if that employee has not received an exam within the previous 6 months. The extent of the exam will be limited to substances to which the

worker may have been exposed to in his/her job assignment(s) since the previous exam.

a) Worker Training and Right-to-Know Compliance. In accordance with 29 CFR 1910.1200, the Contractor shall develop a hazard communication program. Workers shall be informed of what types of hazards are present or may be potentially present in the work environment. Material Safety Data Sheets (MSDS) for hazardous materials known to exist on the work site shall be included in the Plan.

The minimum hazard communication training program shall include:

(1) An explanation of the OSHA Hazard Communication Rule;
(2) Discussion of potential hazards posed by chemicals;
(3) Protective measures, such as work practices, engineering controls, and equipment to be implemented to reduce the risk of exposure;
(4) An explanation of how to obtain hazardous substance information;
(5) An explanation of employee rights.

2. Contaminated Soil. As discussed in DESCRIPTION, contaminated soils will potentially be encountered in the project area during excavations. The contractor shall prepare a project specfic Excavation and Soil Management Plan that describes procedures for the identification, containment, documentation, and disposal of non-hazardous and hazardous soils. The CIH shall monitor all excavated soils and ambient air in work zones in accordance with the site-specific Plan (discussed above in Construction, Item 1) during all earthwork operations, including excavation of storm drains and utility construction. All monitoring results shall be documented, including time of measurement, location and depth of measurement, measurement reading, and any other pertinent information necessary to be able to adequately document the monitoring readings. If the Contractor is performing earthwork simultaneously in areas greater than 500 feet apart, additional monitoring instruments shall be provided by the Contractor

a.EXCAVATION: Excavated soils shall be screened with a Photo Ionization Detector (PID) to monitor the presence of volatile organic compounds (VOCs) which indicates petroleum impacted soils. Contractor shall document the environmental disposition of all excavated soil and shall confer with City Inspector, Engineer, and/or MDE personnel as necessary to ensure proper handling, manifesting and disposal. Conference should be reached between the contractor and the Engineer pre-excavation as to who bears signature authority for waste manifestation of the hazardous and/or non-hazardous waste streams. Soils must be disposed of by the contractor at approved facilities commensurate with the degree of impact and the media they contain. For the disposal of any contingent hazardous waste soils, the Contractor shall obtain on behalf of the Engineer a temporary generator identification number from the Maryland Department of the Environment.

b. STORAGE: Contractor must create a disposal location at the job site where soil determined as contaminated can be staged until soil material is transported off-site for disposal. All non-hazardous soil shall be placed on, and completely covered by, strong plastic sheeting (or equivalent) and in accordance with COMAR 26.10 for petroleum impacted soil stockpiling provisions. All hazardous soil, if encountered, shall be placed in appropriate lined containers that can be equipped with water-tight covers. For hazardous soils, the length of storage shall not exceed the time limits specified by the issuance of a temporary hazardous waste generator identification number. For petroleum impacted soils excavated soils shall be removed from the site within 50 days in accordance with COMAR 26.10. All soils shall be continually covered.

c. DISPOSAL: The Contractor will be responsible for disposition of soils as outlined below;

1) Obtain waste disposal characterization samples from each soil waste stream in accordance with requirements of selected disposal facility. The number of samples and sample analyses required will be based on the permit requirements of the elected disposal facility. Site assessment soil results are provided in the contract Special Provisions. The site assessment data may, or may not, be suitable for waste disposal characterization depending on the requirements of the selected disposal facility.

2) The hauler shall transport the contaminated soil to a treatment or disposal facility licensed by state and federal regulatory authorities for acceptance of such wastes. All waste material shall be transported and disposed of in accordance with all applicable regulations.

3) The Contractor shall provide all necessary waste characterization analysis results, manifests and certificates of contaminant disposal, and disposal volumes to the Engineer for his records.

3. DEWATERING: The Contractor is advised that dewatering operations may produce petroleum contaminated water that will require disposal/treatment. The Contractor shall prepare a Dewatering Management Plan that describes procedures for the identification, containment, documentation, and disposal of potentially contaminated groundwater. If contractor notes contamination during dewatering operations and seeks compensation for disposal/treatment, additional sampling/monitoring requirements for parameters reflective of the groundwater contamination shall be obtained and reported to the Engineer. Compensation will be made for contaminated waters with constituents exceeding MDE non-residential risk based concentrations and shall be disposed of in accordance with MDE regulations.

a. Dewatering Plan. The contractor shall develop an overall dewatering plan with design details as part of the shop drawing phase of the Contract in an attempt to minimize

contaminated groundwater flow into trenches and structural excavations. These plans and details shall include, but are not limited to, design of sheeting and shoring, concrete tremie seal or clay foundation seals, pervious foundation depths with maximum pumping rates for various groundwater inflow rates. The Plan must take into consideration that open trenches excavations must be backfilled daily to within two feet of the end of that day's utility installation. Trenches will not be allowed to remain open during non-working hours.

b. The Contractor shall pump water from open excavations only. The Contractor shall plug pipes, and divert other sources of water so that no liquid other than ground water and precipitation collects in the project area. The contractor shall furnish watertight plugs to be installed at the end of each work day for all utility installations including storm drains, conduit, and water lines in the project area. The cost of the watertight plugs shall be incidental to the cost of the various utilities.

c. Ground Water Management. The Contractor shall manage groundwater pumped due to dewatering in the project area. The Contractor may set up and maintain a ground water treatment system designed to treat water for the presence of suspended solids, free product, and/or dissolved hydrocarbons. The Contractor may also elect to containerize the water for subsequent treatment and/or discharge or off-site disposal. Either groundwater management option shall have sufficient capacity to manage groundwater inflow into the open excavation. To the maximum extent practicable, the Contractor shall prevent the mixing of contaminated groundwater with uncontaminated groundwater in order to minimize the water volume requiring treatment or disposal. Any fluids removed from the site for off-site disposal must be transported to a licensed facility permitted for acceptance of the specific waste material. Sampling and laboratory analysis may be required to meet the requirements of the disposal facility or to determine appropriate permit requirements.

d. The Contractor shall obtain any and all necessary permits that pertain to discharge or otherwise. For information, contact the MDE Waste Management Administration at 410.631.3443.

e. The Contractor is responsible for reporting, containing, and cleaning up any spills occurring as a result of dewatering activities until the water is treated in compliance with the discharge permit.

MEASUREMENT AND PAYMENT

The preparation of the Contractor's Site Specific Health and Safety Plan, herein referred to as the "Plan", including all labor needed to prepare and implement the Plan, revisions, and resubmissions, as well as all other incidentals required, shall be measured as a completed document accepted in its entirety by the City of Baltimore Department of Transportation. The Plan shall be paid for at the contract lump sum price for the item "Planning Documents".

The Plan shall be paid for at the contract lump sum price for the item "Planning Documents" which include the Site Specific Health and Safety Plan, the Dewatering Plan, and the Soil Management Plan.

The services of the Contractor's health and safety professionals shall not be measured for payment but shall be included in the lump sum price for the "Planning Documents".

Monitoring labor and equipment shall also be paid for under the item for the "Planning Documents".

Handling and disposal of non-hazardous and hazardous contaminated soils shall be measured based on the actual tons of material removed and requiring handling and disposal. The cost shall include all work necessary to handle, stockpile, store, analyze, transport, and dispose of the material, including all incidentals required to complete the work. The handling and disposal shall be paid for at the unit price contract rate per ton for "Contingent Handling and Disposal of Non Hazardous Soil" and "Contingent Handling and Disposal of Hazardous Soil".

Plastic sheeting used to cover non-hazardous stockpiled soil shall not be paid for separately. Payment shall be included in the cost for "Contingent Handling and Disposal of Non-Hazardous Soil". Sediment and Erosion Control measures used in the stockpiling of non-hazardous soil shall not be paid for separately. Payment shall be included in the cost for "Contingent Handling and Disposal of Non-Hazardous Soil". Containers for the storage and transportation of hazardous soils shall not be paid for separately. Payment shall be included in the cost for "Contingent Handling and Disposal of Hazardous Soil".

Measurement and payment for the Removal and Disposal/Treatment of Petroleum Contaminated Water will be measured and paid for per gallon for the item "Contingent Pumping and Management of Contaminated Water and Liquid". The payment will be full compensation for all treatment, hauling, safety measures, disposal fees and for all material, labor, equipment, tools, and incidentals necessary to complete the work. No separate payment shall be made for the pumping of water that does not require special management.

CATEGORY 300
DRAINAGE

SECTION 305 — MISCELLANEOUS STRUCTURES

305.03 CONSTRUCTION

247 **ADD:** The following after the first paragraph of 305.03.06

Where noted in the Contract plans, the Contractor shall convert existing drainage structures to junction boxes by removing existing frames, covers, top slabs, and structure walls as necessary to allow a precast concrete slab to be fitted on the structure in accordance with the notes and details provided on the Contract plans. The top slabs shall have accessible openings unless otherwise noted on the Contract plans. The Contractor shall have the responsibility of locating the openings so as to not impact adjacent sidewalk ramps and other pedestrian features. Drainage structure walls shall be cut down to an elevation that will result in the new top slab being no closer than 6-inches to the outside top-of-pipe of the highest connecting pipe. Removal of inlet walls shall be performed in a careful manner so as to not damage the remaining structure. Top slabs shall bear evenly on a Mix 3 concrete collar to be poured around the perimeter of the existing structure. Ladder rungs shall be installed in all accessible junction boxes.

305.04 MEASUREMENT AND PAYMENT.

248 **DELETE**: 305.04.03 in its entirety.

INSERT: The following.

305.04.03 Unless otherwise specified in the Contract documents, nonstandard end walls and other miscellaneous structures including modified end sections, manholes, inlets, bends, junction boxes and replacement frames and grates will be measured and paid for at the Contract unit price per each.

Removal of portions of existing drainage structures to be converted to junction boxes, as well as ladder rungs, brick masonry and concrete used in placement of new junction box top slabs, shall be incidental to the Contract unit price per each for Convert Existing Storm Drain Structure to Junction Box.

CATEGORY 300
DRAINAGE

SECTION 308 – EROSION AND SEDIMENT CONTROL
TEMPORARY 3-INCH ASPHALT BERM

308.04 MEASUREMENT AND PAYMENT.

DELETE: 308.04.23 in its entirety.

INSERT: The following.

308.04.23 The Temporary 3-Inch Asphalt Berm (AB) will be measured and paid for at the Contract unit price per linear foot of Temporary Asphalt Berm. The payment will be full compensation for furnishing, hauling, placing all materials and for all material, labor, equipment, tools and incidentals necessary to complete the work. The repair and removal of the AB will not be measured but the cost will be incidental to the Contract price.

CATEGORY 300
DRAINAGE

SECTION 314 — FLOWABLE BACKFILL

314.04 MEASUREMENT AND PAYMENT.

277 **DELETE**: 314.04 in its entirety.

INSERT: The following.

Flowable backfill for utility trenches will be measured and paid for at the Contract unit price per cubic yard of Flowable Backfill for Utility Cuts. Flowable backfill, in addition to brick masonry and Concrete Mix No. 2, used for storm drain abandonment will be measured and paid for at the Contract unit price per cubic yard for Bulkhead and Abandon Existing Pipe with Flowable Fill. The payment will be full compensation for all material, labor, equipment, tools and incidentals necessary to complete the work.

CATEGORY 300
DRAINAGE

CURED IN PLACE PIPE (CIPP) LINING

DESCRIPTION. This item shall consist of providing all labor, equipment, materials and supplies for all Work necessary to restore existing storm drains to a state equivalent to the structural capacity of a new pipe installation using a fiberglass reinforced liner that is cured with ultraviolet (UV) light. The Contractor shall furnish all material, labor and special equipment required to accomplish the Work in accordance with these Specifications. The installation shall affect the complete interior relining of the existing storm drains and shall result in a smooth, hard, strong and chemically inert interior finish, closely following the contours of the existing conduits. The Contractor shall provide a completed system with the mainline and all active lateral connections in operational condition.

The Work includes but is not limited to the following:

1. Providing design calculations relative to the installation of CIPP
2. Bypass pumping of flow
3. Cleaning the storm drains
4. Pre-rehabilitation inspection and video recording of the storm drain
5. Rehabilitation of the storm drains using CIPP lining including sealing liner at manholes
6. Post-rehabilitation television inspection and video recording of completed pipe sections
7. Proper removal and disposal of all waste, debris, excavated and demolished materials

When complete, the rehabilitated section should:

1. Extend from one (1) manhole to the next manhole in a continuous length
2. Yield three-dimensional cross linking strength in tension, compression, and flexural modulus which is structurally sound
3. Provide a service life which is supported by documented, independent test analysis.

MATERIALS. All materials and equipment used in the lining and in the insertion process shall be of their best respective kinds and shall be as approved by the Engineer. Any materials not approved by the Engineer prior to insertion into the piping shall be removed and replaced with approved materials at the Contractor's expense. All equipment, devices and tools required for the Contract shall be owned (or leased) and operated by the Contractor.

At the time of manufacture, each lot of glass fiber tube liner shall be inspected for defects and tested in accordance with applicable ASTM standards (F2019-03). At the time of delivery, the liner shall be homogeneous throughout, uniform in color, free of cracks, holes, foreign materials, blisters, and deleterious faults.

For testing purposes, a production lot shall consist of all liner having the same marking number. It shall include any and all items produced during any given work shift and must be so identified as opposed to previous or ensuing production.

The Engineer may at any time direct the manufacturer to obtain compound samples and prepare test specimens in accordance with applicable ASTM standards.

Cured-in-Place Pipe Materials: The glass fiber tubing shall be seamless and spirally wound, including an exterior and interior film that protects and contains the polyester, vinylester or ortho based resin used in the liner. The exterior film will be provided with a UV light blocker foil.

1. Tube
   a. The Tube shall consist of a seamless, spirally wound glass fiber that is flexible and has strain values (expandable) of equal to eight (8) to ten (10) percent. The tube shall be constructed to withstand installation pressures and have sufficient strength to bridge missing pipe.

   b. The wet out Tube shall have a uniform thickness that when compressed at installation pressures, will meet or exceed the Design thickness.

   c. The Tube shall be sized such that when installed, will tightly fit the internal circumference and length of the original pipe.

   d. The glass fiber Tube shall be saturated with the appropriate resin using a resin bath to allow for the lowest possible amount of air entrapment. The liner will then be formed into a spirally wound shape for the purpose of being seamless in its cured state. An inner and outer material will be added that are both impervious to airborne styrene, with the outer material also having UV blocking characteristics. The inner membrane will be removed after the installation and curing processes are completed.

e. The wall color of the interior pipe surface of CIPP after installation shall be a light reflective color so that a clear detailed examination with closed circuit television inspection equipment may be made.

f. The liner should be seamless in its cured state to insure homogenous physical properties around the circumference of the cured liner.

g. The manufacturer will test the raw materials and liner materials at various stages of manufacturing on every liner, including taking samples of every finished liner and conducting tests for e-modulus, tensile, wall thickness and porosity.

2. Resin. The resin system shall be polyester, vinylester, or orthothalic (either ppg or npg grade) depending on the choice of the Engineer, with a catalyst system that when properly cured within the tube composite meets the physical properties of:

Tensile Modulus (minimum)	1,100,000 psi
Tensile Strength (minimum)	21,800 psi
Long term E-modulus	675,000 psi
Long term tensile bending strength	13,500 psi
Liner wall porosity	APS Standard

3. Adheres to ASTM F 2019-03

General Corrosion Requirement: The cured-in-place pipe system shall utilize thermosetting resins which will withstand the corrosive effect of the existing residential, commercial, and industrial effluents, liquids and/or gases.

Liner Manufacturer Information:

It shall be necessary for the Contractor to obtain the Engineer's prior approval for all materials or processes and the Engineer shall have the power at any time to order the Contractor to modify or discontinue any practice. All such orders shall be given in writing.

The Contractor shall deliver the uncured resin impregnated liner to the site. The tube may not be impregnated at the site.

All fabricating and Contractor testing shall be carried out under cover and no materials shall be exposed to the weather until they are ready to be inserted. All materials should be protected from the weather and exposure to ultra-violet light as practical during the manufacture and installation process.

Each liner shall be accompanied by a certificate of conformity.

Materials for Bypass Pumping:

The Contractor shall provide the necessary stop/start controls for each pump.

The Contractor shall include one (1) stand-by pump of each size to be maintained on site. Back-up pumps shall be on line and isolated from the primary system by a valve.

All discharge piping shall be approved by the Engineer.

Television Inspection Material:

Closed Circuit TV Equipment. Select and use closed circuit television equipment that will produce a color video CD or DVD.

Pipe Inspection Camera. Produce a video recording using a pan and tilt, radial viewing and pipe inspection camera that pans plus or minus two-hundred seventy-five degrees (± 275°) and rotates three-hundred and sixty degrees (360°). The television camera used for the inspection shall be satisfactorily designed and constructed for such inspection. The camera shall be operative in one hundred percent (100%) humidity conditions. Use a camera with an accurate footage counter which displays on the monitor the exact distance to the camera from the center line of the starting manhole. Use a camera with camera height adjustment so the camera lens is always centered at one-half (1/2) the inside diameter, or higher, in the pipe being televised. Lighting for the camera shall be suitable to allow a clear picture of the entire periphery of the pipe. A reflector in front of the camera shall be capable of showing on the video recording the City name, Contractors name, date, line size and material, line identification (City's manhole numbers at both ends) and ongoing footage counter. The camera, television monitor and other components of the video system shall be capable of producing a picture quality to the satisfaction of the City; and if unsatisfactory the equipment shall be removed and replaced with adequate equipment. No payment will be made for an unsatisfactory inspection.

A CD or DVD disk shall be supplied for all inspection surveys. All videos shall be performed and submitted at a resolution capable of providing a picture quality which is adequate for the purpose of inspection as stated in these Specifications and to the satisfaction of the Engineer. All videos shall be submitted in MPEG1 format (mpg.), user friendly and easy to view utilizing standard Windows software and will become the property of the City of Baltimore. Two (2) labels are required. One (1) shall be placed on the CO or OVO and the other on the face of the jewel case. Permanently label each CD or OVO with the following information:

Face of CD or DVD:

Baltimore City

Department of Transportation

Contractor's Name: _

Project Name &No.: _

Sewer 10.: _

Inspection Type:

[X] Survey [ ] Pre-Installation

[ ] Post-Installation

COIDVO No.: _

Date Televised: _

Date Submitted: _

COIDVO No.: _

Date Televised: _

Face of the CD or OVO Jewel Case:

Manhole No. From	Manhole No. To	Pipe Diameter	Pipe Length	Street

Water for Pipe Cleaning:

Potable water to be used for pipe lining and cleaning processes may be obtained from the City fire hydrants when available, at no cost to the Contractor. If hydrant water is not available the Contractor must provide other sources of water for the cleaning and lining process at its own expense. The Contractor shall be responsible for obtaining all necessary fire hydrant permits. The Contractor shall provide all piping, hoses, valves, connections, or tank vehicles necessary to complete the Work.

CONSTRUCTION.

The following reference specifications apply to the installation of the CIPP lining:

1. ASTM F2019 - 03(2009) Standard Practice for Rehabilitation of Existing Pipelines and Conduits by the Pulled in Place Installation of Glass Reinforced Plastic (GRP) Cured-in-Place Thermosetting Resin Pipe (CIPP)
2. ASTM D 543: Test Method for Resistance of Plastics to Chemical Reagents
3. ASTM D 618: Standard Methods for Conditioning Plastics for Testing.

Preconstruction Submittals:

At least ten (10) days prior to beginning Work, the Contractor shall submit the following items for the Engineer's approval:

a) A comprehensive construction sequencing plan. At minimum, the plan shall include:

   1. A proposed Work schedule.
   2. Identification of set-up locations for lining installation.
   3. Lining procedures.
   4. Bypass pumping plan.
   5. Debris disposal plan.

b) Manufacturer's published literature and published data for the proposed cured in place liner system.

c) The cured in place rehabilitation system supplier's letter of certification for each worker who will perform cured in place rehabilitation Work.

d) The manufacturer's certification that the proposed CIPP system for the project meets the requirements of these Specifications will meet or exceed the physical properties given in the manufacturer's published literature.

e) Documentation of Product Experience. The Contractor may be required to include references for jobs completed with the proposed CIPP rehabilitation method. The jobs

submitted shall show that at least twenty thousand (20,000) linear feet of the product has been installed in similar size diameter pipes by the Contractor or other Contractors. The documentation may include up to ten (10) jobs, which have been completed, preferably within the last two (2) years, and installed in similar size pipe diameters. Information provided for each job shall include a description of the job, the location of the job, the value of the job and the contact for the job including name, title, address and telephone number.

f) Calculations supporting recommended liner thicknesses. The calculations shall be sealed by a registered Professional Engineer licensed in the state of Maryland.

g) Shop drawings and product data for the rehabilitation method including a report outlining the process to be used in the rehabilitation of the storm drain. The report shall also include information specific to the job, such as coordination issues, access, timing, manufacturer's installation instructions and bypass pumping.

Submittals Prior to Liner Installation:

a) All measurements made by the Contractor to verify length and diameter of pipe prior to ordering of material.

b) Two (2) complete sets of video and audio information from the pre-installation television inspections performed as specified in the television inspection section.

Storm Drain Cleaning:

The intent of storm drain pipe cleaning is to remove foreign materials from the storm drain as required for the TV inspection and/or proper installation of the CIPP. It is recognized there are some conditions such as broken pipe and major blockages that prevent cleaning from being accomplished or where additional damage would result if cleaning were attempted or continued. The Engineer will evaluate the obstruction and will direct the Contractor as to the amount and method to be used for cleaning those specific pipe sections if cleaning is determined by the Engineer to be feasible. If in the course of normal cleaning operations, damage results from preexisting and/or unforeseen conditions, such as broken pipe, the Contractor will notify the Engineer of the location and nature of the damage. The Contractor will be required to make repairs at no additional cost when the Engineer has determined the Contractor was negligent in performance of its cleaning operations. Satisfactory precautions shall be taken to protect the pipes from damage that might be inflicted by the improper use of cleaning equipment. Damage as a result of the Contractor's improper operations shall be promptly repaired by the Contractor at no cost to the City. All equipment, devices and tools required for the cleaning operation shall be owned or leased and operated by the Contractor.

Cleaning Equipment:

a) Hydraulically Propelled Equipment: The equipment used shall be a movable dam type and be constructed in such a way that a portion of the dam may be collapsed at any time

during the cleaning operation to protect against flooding of the storm drain. The movable dam shall be equal in diameter to the pipe being cleaned and shall provide a flexible scraper around the outer periphery to insure removal of grease. If cleaning balls and other equipment which cannot be collapsed are used, special precautions to prevent flooding of the drain, public or private property shall be taken.

b) High Velocity Jet (Hydrocleaning) Equipment: All high-velocity pipe light cleaning equipment shall be constructed for ease and safety of operation. The equipment shall have a selection of two (2) or more high-velocity nozzles. The nozzles shall be capable of producing a scouring action from fifteen to forty-five degrees (15° to 45°) in all size lines designated to be cleaned.

c) Equipment shall also include a high-velocity gun for washing and scouring manhole walls and floors. The gun shall be capable of producing flows from a fine mist to a solid stream. The equipment shall carry its own water tank, auxiliary engines, pumps and hydraulically driven hose reel.

d) Bucket machines shall be in pairs with sufficient power to perform the Work in an efficient manner. Machines shall be belt operated or have an overload device. Machines with direct drive that could cause damage to the storm drain will not be allowed.

e) Power rodding machines shall be either sectional or continuous rod type, capable of holding a minimum of seven hundred fifty feet (750') of rod. The rod will be fabricated of a heat treated steel.

Cleaning Precautions:

During all cleaning and preparation operations, all necessary precautions shall be taken to protect the storm drain from damage and to insure that no damage is caused to property adjacent to or served by the storm drain or its branches. Any damage caused to property as a result of such cleaning and preparation operations shall be restored to preexisting conditions by the Contractor at no additional cost to the City. Satisfactory precautions shall be taken in the use of cleaning equipment.

When hydraulically propelled cleaning tools (which depend upon water pressure to provide their cleaning force) or tools which retard the flow in the storm drain line are used, precautions shall be taken to ensure that the water pressure created does not damage or cause flooding of property being served by the storm drain. When possible, the flow if storm drain shall be utilized to provide the necessary pressure for hydraulic cleaning devices. When additional water from fire hydrants is necessary to avoid delay in normal work procedures, the water shall be conserved and not used unnecessarily. No fire hydrant shall be obstructed in case of fire in the area served by the hydrant.

Cleaning Procedures:

The designated storm drain section shall be cleaned using hydraulically propelled, high velocity jet equipment or mechanically powered equipment. The equipment shall be capable of removing dirt, grease, rock, sand, other materials and obstructions from the storm drain

lines and manholes. The equipment and methods selected shall be approved by the Engineer. If cleaning of an entire storm drain cannot be successfully performed from one (1) manhole, the equipment shall be set up on the other manhole and cleaning again attempted.

Roots shall be removed in sections where root intrusion is a problem. Any roots which could prevent the proper insertion of the CIPP shall be removed. Root removal techniques may include use of mechanical equipment such as rodding machines, bucket machines or winches using root cutters and porcupines. Equipment such as high-velocity jet cleaners or chemical root treatment may be used at the Contractor's option and in accordance with the manufacturer's Specifications. To aid in removal of roots, storm drain sections that have root intrusion shall be treated with an acceptable herbicide. The application of the herbicide to the roots shall be done in accordance with the manufacturer's recommendations and Specifications in such a manner to preclude damage to surrounding vegetation. Any damaged vegetation so designated by the City shall be replaced by the Contractor at no additional cost to the City. All safety precautions as recommended by the manufacturer shall be adhered to concerning handling and application of the herbicide.

Material Removal and Disposal:

All loose debris and other solid or semisolid material resulting from the cleaning operation shall be removed at the downstream manhole of the section being cleaned. When hydraulic cleaning equipment is used a suitable dam or weir shall be placed in the downstream manhole to trap all such material. Passing material from the manhole section to manhole section, which could cause line stoppage, accumulation of sand in wet wells, or damage pumping equipment, shall not be permitted.

Under no circumstances shall any loose debris removed during these operations be dumped or spilled into streets, ditches, storm drains or sanitary sewers. All solids or semisolids resulting from the cleaning operations shall be removed from the site and disposed of by the Contractor, at its expense, no less often than the end of each workday, in a legal and sanitary manner as approved by the appropriate authorities, in a properly licensed landfill. Under no circumstances will the Contractor be allowed to accumulate debris, etc, on the site of Work beyond the stated time, except on totally enclosed containers and as acceptable to the Engineer.

The Contractor shall keep its haul route and work area(s) neat, clean and reasonably free of odor, and shall bear all responsibility for the clean up of any spill which occurs during the transport of cleaning/surface preparation by-products and the cleanup of any such material which is authorized by or pursuant to the Contract and in accordance with applicable law and regulations. The Contractor shall immediately cleanup any such spill or waste. If the Contractor fails to clean up such spill or waste immediately, the Engineer shall have the right to clean up or arrange for its cleanup, and shall charge to the Contractor all costs, including administrative costs and overhead, incurred by the City in connection with the clean up. The City shall also charge to the Contractor any costs incurred or penalties imposed on the City as a result of any spill, dump or discard. Under no circumstances is this material to be

discharged into the waterways or any place other than where authorized to do so by the appropriate authorities.

Transport vehicles must be of type(s) approved for this application by the political jurisdiction involved, that they have water tight bodies, that they are properly equipped and fitted with seals and covers to prohibit material spillage or drainage, and that they be cleaned as often as is necessary to prevent deposit of material on roadways. Vehicles must be loaded within legal weight limits and operated safely within all traffic speed regulations. The routes used by the Contractor for the conveyance of this material on a regular basis shall be subject to approval by governing authority having jurisdiction over such routs.

Acceptance of Storm Drain Cleaning:

Acceptance of cleaning shall be made upon the successful completion of the television inspection and shall be to the satisfaction of the Engineer. The Contractor shall be required to re-clean and re-inspect the storm drain line until the cleaning is shown to be satisfactory. In areas where television inspection is not possible, the Engineer may require the Contractor to pull a double squeegee (with each squeegee the same diameter as the storm drain) through each pipe section as evidence of adequate cleaning.

In addition, on all pipes which have sags or dips, to an extent that the television camera lens becomes submerged for three (3) or more feet during television inspection, the Contractor shall pull double squeegee and/or sponges through the line in order to remove the water from the dip or sag or until television camera lens is no longer submerged. This requirement may be waived by the Engineer if the water in which the camera lens is submerged is clear enough to allow the identification of pipe defects, cracks, holes and location of connection storm drain laterals.

TV Inspection:

1. Pre-installation TV Inspection: Pre-installation TV is a video inspection by the Contractor of storm drain lines specified for rehabilitation to confirm cleaning, location of service connections and constructability of line rehabilitation according to Drawings and Specifications.

2. Post-installation TV Inspection: Post-installation TV Inspection is a video inspection to determine that the rehabilitation and/or replacement of the storm drain has been completed according to Drawings and Specifications.

3. TV Inspection Log: Information collected and recorded by each TV operator for any TV inspection effort that is submitted to the City.

Bypass Pumping:

The Contractor shall submit to the City a detailed plan and description outlining all provisions and precautions that the Contractor shall take regarding the handling of storm flows during rehabilitation. The plan shall be submitted to the City for review and approval at least ten (10) days prior to commencing Work on each portion of the system to be rehabilitated.

CIPP Lining Installation

Preparatory Procedures:

Prior to beginning insertion of the liner bag, the Contractor shall inspect the cleaned line by use of closed circuit TV cameras and shall confirm to its own satisfaction that the lines are adequately cleaned. Insertion of the bag by the Contractor shall serve as evidence of its acceptance of the condition of the piping and the suitability of the liner insertion within the host pipe. Failure of the liner system due to inadequately cleaned host pipes shall be repaired by the Contractor at no cost to the City.

During the process of manufacture and impregnation, the City shall have reasonable opportunity to examine all operations where the manufacture and impregnation (when applicable) of the liner is being carried out. The Contractor shall give appropriate prior notice in order that the Engineer may be on hand to observe the various processes.

No Work shall be performed by the Contractor except in the presence of the Engineer, unless otherwise approved. The Contractor shall coordinate its work schedule and give timely prior notice regarding its intentions to perform any and/or all parts of the Work, in order that the Engineer may be on hand. Any Work performed in the absence of the Engineer is subject to removal and replacement at the Contractor's expense.

Upon substantial completion of the Work the Contractor shall, in the presence of the Engineer, inspect the line using closed circuit television equipment. The video produced shall be accompanied by a simultaneously produced, audio narration. The audio narration shall draw attention to all recognizable defects, imperfections, etc., and the location along the length of the piping shall be accurately noted. In addition, the locations and all pertinent details regarding the entrance of service laterals into the main trunk storm drain shall be accurately noted on the audio narration. One (1) copy of the audio and video information shall become the property of the City. Televising shall be performed as specified in the television inspection section.

The Contractor shall be responsible for the construction layout at the beginning of the project. The Contractor shall take all precautions to protect all stakes, hubs, control points, etc. If the stakes, hubs, control points, etc. are disturbed during construction, the Contractor shall restake at its expense. The Contractor is responsible for the accuracy of the restaking.

The utilities must be marked by "Miss Utility" prior to construction layout.

The sizes, lengths and materials of the pipes to be relined shall be as indicated on the plans, but shall be verified by the Contractor prior to commencing with the Work.

Cleaning of pipes shall be performed as specified in the storm drain line cleaning section.

Inspection of storm drain lines shall be performed as specified in the television inspection section.

Bypass pumping of storm drain lines shall be performed as specified in the bypass pumping section.

The line shall be cleared of obstructions such as solids, dropped joints, intruding service connections or collapsed pipe that may prevent liner installation. If inspection reveals an obstruction that cannot be removed by conventional remote storm drain equipment, then a point repair excavation shall be made to remove or repair.

Point repairs shall be made only after cleaning methods were performed and shall be approved in advance by the Engineer.

Liner Installation:

Conduct operations in accordance with applicable OSHA standards, including those safety requirements involving Work on an elevated platform and entry into a confined space. Make suitable precautions to eliminate hazards to personnel near construction activities when pressurized air is being used.

1. The approved system must utilize an outer and inner film to ensure that the liner remains intact during the insertion process and to protect the resin at all times during the installation and curing process from water and debris contamination, and resin migration which will lower the physical properties of any thermoset resin cured liner.

    a. If there is any damage to the outer film, the film should be repaired immediately with styrene-proof tape.

2. A constant tension winch should be used to pull the glass fiber liner into position in the pipe. Once inserted, end plugs shall be used to cap each end of the glass fiber liner to prepare for pressurizing the liner. The end plugs should be secured with straps to prevent them from being expelled due to pressure. As with all CIPP products, liner restraints should be used in manholes.

3. A slip sheet shall be installed on the bottom half of the pipe prior to liner insertion, for the purpose of smoothing out the bottom of the liner to increase flow characteristics.

4. The glass fiber liner shall be cured with UV light sources at a constant inner pressure. When inserting the curing equipment in the liner, care should be taken to not damage the inner film material.

    a. The UV light sources should be assembled according to the manufacturer's specifications for the liner diameter. For the liner to achieve the required water tightness and specified mechanical properties, the following parameters must be controlled during the entire curing process, giving the Engineer a record of the curing parameters over every segment of the entire length of the liner. This demonstrates that the entire liner is cured properly. The recording will include:
        - Curing speed
        - Light source working & wattage
        - Inner air pressure
        - Exothermic (curing) temperatures
        - Date and time
        - Length of liner

        This will be accomplished using a computer and data base that are tamper proof. During the curing process, infrared sensors will be used to record curing data that will be submitted to the Engineer with a post CCTV inspection on DVD.

        The parameters for curing speed, inner air pressure and wattage are defined in the Quality Tracker UV curing protocol issued by the manufacturer.

    b. The optimal curing speed, or travel speed of the energized UV light sources, is determined for each length of liner based on liner diameter, liner thickness, and exothermic reaction temperature.

5. The inner film material should be removed and discarded after curing to provide optimal quality of the final product.

6. The liner will adhere to USEPA standards for styrene on the jobsite.

Form a tight seal between the CIPP and the host pipe at the pipe penetration. Do not leave any annular gaps or routes of infiltration. Seal the annular space with a one half inch *(1/2")* diameter activated Oakum band soaked in chemical sealant or an approved equivalent. Seal any annular spaces greater than one-half inch *(1/2")* with manhole wall repair material. Finish off the seal with a nonshrink grout or cementitious liner material approved by the engineer and placed

around the pipe opening from inside the manhole in a band at least four inches (4") wide. Complete the sealing procedure for each liner segment immediately after the liner is cured.

Any defects, which, in the judgment of the City, will affect the integrity or strength of the lining, shall be repaired or the liner replaced at the Contractor's expense. Obtain approval of the Engineer for method of repair, which may require field or workshop demonstration.

The Contractor shall open all storm drain lateral connections located and identified from the CIPP television inspections. Cutting the holes to reestablish the storm drain laterals shall be accomplished from the interior of the pipe by means of a remote television camera directed cutting device. Holes cut through the CIPP shall be neat and smooth and shall be free of burrs, frayed edges, or any restrictions preventing free flow into the main storm drain line. Storm drain lateral connections shall be reestablished to a minimum of ninety percent (90%) of the original opening. All "coupons" and fragments of "coupons" resulting from cutting the CIPP shall be recovered at the downstream manhole and removed. All edges shall be brushed smooth.

Upon completion and before acceptance by the City, the Contractor shall reinspect the rehabilitated pipeline by the use of closed circuit TV cameras and shall submit video of the rehabilitated pipeline to the Engineer for approval/acceptance of the Work in accordance with the television inspection section.

Upon completion of rehabilitation Work and testing, clean and restore project area affected by the Work.

MEASUREMENT AND PAYMENT. CIPP will be measured and paid for at the pertinent Contract Unit Price per linear foot of Cured-in-Place Storm Drain Pipe Lining. The quantity to be paid for will be the number of linear feet of liner actually installed and accepted by the Engineer. Measurement shall be along the centerline of pipe from end to end at the inside face of wall at the manholes. The payment shall be full compensation for all material, labor, equipment, tools, hauling, bypass pumping, cleaning; root removal, reconnection of storm drain laterals, and all associated TV inspection. Cleaning pipes will be measured and paid for at the Contract unit price per linear foot for Clean Existing Pipe Any Size.

CATEGORY 300
DRAINAGE

3-Inch PVC PIPE FOR ROOF DRAIN OUTFALL

DESCRIPTION. This item shall consist of the installation of 3-Inch PVC pipe roof drain outfalls and appurtenances.

MATERIALS. PVC pipe and fittings shall be Schedule 40 meeting the requirements of ASTM D 1785 and ASTM D 2467. Pipe shall be NSF approved.

The grates and frames required in the "Special Roof Drain at Sidewalk Detail" as shown in the Construction Drawings shall be Neenah R-4441-1, or approved equal.

CONSTRUCTION. General construction method for pipe excavation and installation shall be in accordance with Section 303, Pipe Culverts.

PVC pipe and fittings shall be prepared and solvent cement joints made in accordance with ASTM D2855 and the manufacturer's installation instructions for the conditions encountered. Test fit dry each joint before applying solvent cement. If the dry fit of any fitting or coupling is loose, the pipe and fitting shall be rejected due to improper size. Do not build up a loose fitting joint with multiple layers of solvent cement to overcome the loose fit. Do not apply solvent cement when the air temperature is below 40°F, unless approved by the Engineer.

Give all solvent cement joints the following minimum set times before moving or handling:

Set Times	Temperature
30 Min.	60° to 100° F
1 Hour	40° to 59° F

Prior to testing, joints shall be allowed to cure a minimum of 24 hours or as approved to cure a minimum of 24 hours or as approved by the Engineer. Pipe shall be tested for leakage, by the Contractor, as directed by the Engineer. No leakage will be allowed.

Follow the pipe manufacturer's installation instruction for field cutting and beveling P.V.C. pipe and minimum radius of curvature of the various sizes of pipe for installing curved sections of pipe. Solvent cement joint pipe shall be placed in the trench in accordance with manufacturer's recommendations or as directed by the Engineer. After placing pipe and fittings in the trench, allow a minimum of 30 minutes prior to backfilling or placing concrete encasement.

The existing roof drain shall be connected to roof drain outfall pipe or as otherwise shown in the Construction Drawings. Connection shall be coordinated with the property owners. Sections of the property owners' roof drain that are damaged by the Contractor shall be replaced at the Contractor's expense.

MEASUREMENT AND PAYMENT. 3-Inch PVC Pipe for Roof Drain Outfall shall be paid for at the contract unit price per linear foot. The payment will be full compensation for all pipe, fittings, adapters, elbows, tees, reducers, and appurtenances, as well as excavation, removal of existing roof drain pipe, connection to existing roof drain, custom fabrication, thickened cement concrete sidewalk, and all labor, materials, testing equipment and incidentals necessary to complete the work.

The grates and frames required in "Special Roof Drain at Sidewalk Detail" shown on the Plans shall be considered incidental to 3-Inch PVC Outlet Pipe for Drains.

CATEGORY 300
DRAINAGE

SLOTTED DRAIN CMP

DESCRIPTION. This work shall consist of installing slotted drain corrugated metal pipe (SDCMP) to the specified line and grade as indicated on the Contract Plans or as directed by the Engineer.

MATERIALS

Selected Backfill	302
Flowable Backfill	314
Mix No. 2 Concrete	902
Pipe	905

All SDCMP shall be pre-fabricated. The SDCMP shall consist of corrugated aluminized steel type 2 pipe (CSP) meeting the requirements of AASHTO M36/ASTM 760 and AASHTO M274 with a grate of the size and dimensions indicated on the Contract Plans. The grate shall be fabricated and attached in accordance with the following:

The grate shall be manufactured from ASTM A 570, Grade 36 or ASTM A 36 steel. The spacers and side plates shall be 3/16-inch material $\pm$ 0.008 inches. Plate extenders, if specified for variable-height grates, shall be 7 gage and ASTM A761 or the above materials.

Grate spacer plates shall be on 6-inch centers and welded on both sides to each bearing plate (the side plates) with four (4) 1 ¼-inch long 3/16-inch fillet welds. The grate shall be trapezoidal in cross section with a 1 ¾-inch top opening and 3-inch opening at the inside top of the CSP. Spacer plates shall be slanted against the direction of flow at an angle of 30 degrees.

All grates shall be galvanized in accordance with ASTM A123, except with 2-ounce galvanized coating.

Grates shall be attached to the CSP by fillet welds a minimum of 1-inch long on each side of the grate at every other corrugation. Welds shall be along the corrugation tangents.

CONSTRUCTION. Installation of the SDCMP shall be in general conformance with the requirements of Section 303 – Pipe Culverts, with the following exceptions:

Pipe lengths and gradients shall be verified by the Contractor and shall be acceptable to the Engineer prior to installation. The slope of the SDCMP shall follow the slope of the finished roadway.

Excavation. The roadway embankment shall be placed and compacted up to the final subgrade elevation prior to excavating the trench for the SDCMP. The trench width shall not be less than the diameter of the pipe plus 18 inches. Excavation shall extend below the bottom of the SDCMP to a depth sufficient to allow for vertical adjustment of the pipe prior to backfilling but shall not exceed 6 inches.

Bedding. Bedding shall consist of Selected Backfill placed to allow for final vertical alignment of the SDCMP. Compaction shall be in accordance with Section 210. The backfill shall extend across the entire bottom of the trench and shall extend up the side of the CSP a maximum of 1 inch.

Joints. Joint shall be sealed with rubber gaskets and coupling bands conforming to AASHTO M 36. Bands shall be fabricated in accordance with the details shown on the Contract Plans such that the maximum gap between grates for two joined lengths of SDCMP does not exceed 3 inches. Additional coupling bands and a short length of standard CSP shall be used at the connection of the SDCMP to proposed inlets as shown on the Contract Plans.

Installation and Backfill. Flowable fill shall be placed in accordance with Section 314 from the top of the Selected Backfill to the intersection of the grate and the CSP. The Contractor shall coordinate backfilling with the placement of the roadway Graded Aggregate Base. The Contractor shall protect the grate of the SDCMP during backfilling by taping with standard duct tape or other acceptable means to prevent flowable fill and other materials from falling into the SDCMP. The SDCMP shall be anchored in place both horizontally and vertically during backfilling by the use of wood or metal supports, sandbags, concrete blocks or other approved means to prevent shifting or "rolling" of the grate, as well as flotation of the pipe. All supports or anchors shall be temporary and shall be completely removed upon curing of the flowable fill. Protection of the grate shall remain in place until placement of the hot mix asphalt surface course.

MEASUREMENT AND PAYMENT. SDCMP shall be measured and paid at the Contract unit price per linear foot. Payment shall be full compensation for all excavation, sheeting, shoring, hauling, rehandling of material, bedding, backfill, compaction and for all materials, labor, equipment, tools and incidentals necessary to complete the work.

Installation, removal and disposal of all temporary supports, anchors and protection of grating shall be incidental to the construction of the SDCMP.

Connections to inlets including additional coupling bands and lengths of standard CSP shall be incidental to the construction of the SDCMP.

CATEGORY 300
DRAINAGE

WATTLE INLET PROTECTION

DESCRIPTION. This work shall consist of installing Wattle Inlet Protection (WIP) and geosynthetic catch basin inserts at existing and proposed drainage inlets and, if necessary, along existing contours for erosion and sediment control within disturbed areas, as specified in the Contract Documents or as directed by the Engineer.

MATERIALS.

Wattle. Wattles shall be composed of coir fibers or straw fibers bound by a biodegradable netting into a roll with a minimum diameter of 12-inches and a maximum length of 20-feet. Wattles may abut, or overlap, another wattle for longer lengths, if necessary. The fibers shall be loosely packed to allow passage of clean water while capturing sediment from the site, as specified by the Engineer or as recommended by the manufacturer.

Catch Basin Inserts. Catch Basin Inserts shall be manufactured from a specially designed woven polypropylene geotextile. This geotextile shall be sewn by a double needle machine, using a high strength nylon thread.

Catch Basin Inserts will be manufactured to fit the opening of the catch basin or drop inlet. Catch Basin Inserts will have the following features: two dump straps attached at the bottom to facilitate emptying; lifting loops as an integral part of the system to be used to lift inlet bag from the basin; restraint cord approximately halfway up the sack to keep the sides away from the catch basin walls, this cord is also a visual means of indicating when the sack should be emptied. Once the strap is covered with sediment, the Catch Basin Inserts shall be emptied, cleaned and placed back into the basin, all within 24 hours.

Catch Basin Inserts seams shall have certified average wide width strength per ASTM D-4884 standards as follows:

Properties	Test Method	Units	Test Results
Grab Tensile Strength	ASTM D-4632	lbs.	300
Grab Tensile Elongation	ASTM D-4632	%	20
Puncture	ASTM D-4833	lbs.	120
Mullen Burst	ASTM D-3786	P.S.I.	800
Trapezoid Tear	ASTM D-4533	lbs.	120
UV Resistance	ASTM D-4355	%	80

Apparent Opening Size	ASTM D-4751	US Sieve	40
Flow Rate	ASTM D-4491	Gal/Min/Ft2	40
Permittivity	ASTM D-4491	sec -1	0.55

All properties are Minimum Average Roll Values (MARV)

CONSTRUCTION. Placement of the wattle shall be in accordance with the details on the Contract plans.

Wattle Inlet Protection (WIP) shall be composed of a wattle of sufficient length to cover the throat of curb opening inlets (WIP Type A) or the perimeter of grates inlets (WIP Type B), plus 12-inches of overlap into the adjacent gutter pan.

When directed by the Engineer, Wattles may be moved from inlets to follow along the contours within disturbed areas until the area is stabilized. Wattles placed along the contours shall be installed in accordance with the detail on the Contract plans.

To install Catch Basin Inserts in the catch basin, lift the grate and place woven polypropylene geotextile insert in the opening so that it forms a basket shape within the inlet. Hold out approximately six inches of the sack outside the frame. This is the area of the lifting straps. Replace the grate to hold the sack in place.

When the restraint cord is no longer visible, inlet bag is full and should be emptied, cleaned and replaced within 24 hours.

This type of protection must be inspected weekly, during a rainfall event and immediately after a rainfall event. The geotextile must be replaced or cleaned immediately when clogged with sediment. To remove the Catch Basin Inserts, take two pieces of 1-inch diameter rebar and place through the lifting loops on each side of the sack to facilitate lifting.

To empty inlet bags, place it where the contents will be collected. Place the rebar through the lift straps (connected to the bottom of the sack) and lift. This will turn the inlet bag inside out and empty the contents. Clean out and rinse. Return the inlet bag to its original shape and place back in the basin.

The Catch Basin Inserts are reusable. Once the construction cycle is complete, remove insert from the basin and clean. The project engineer and the Erosion and Sediment Control Section will inspect placement of the inlet bags.

The catch basin inserts should be stored out of the sunlight until needed on another project.

MEASUREMENT AND PAYMENT. Wattle Inlet Protection will be measured and paid for at the Contract unit price per each, regardless of the type (A or B) of inlet protection specified. The payment will be full compensation for all material, labor, equipment, tools, and incidentals necessary to complete the work, including installation and maintenance of the Catch Basin Inserts.

CATEGORY 400
STRUCTURES

MAINTENANCE OF STREAM FLOW

DESCRIPTION. This work shall consist of maintaining the flow inside of the existing Central Avenue storm drain during the lining operations as specified on the Plans for the duration of the project. The Contractor shall maintain a base flow inside of the storm drain that satisfies a 2-year storm event. The maintenance of stream flow shall be accomplished via an approved temporary diversion system to be submitted as a shop drawing submittal to the Engineer for review and approval.

MATERIALS. None. Materials used for the maintenance of stream flow shall be in accordance with the Contractor's approved working drawing submittal.

CONSTRUCTION. The Contractor shall maintain flow at all times during the life of the project. The Contractor shall conduct his operations in a safe manner to ensure public safety and protect the work area including the structural integrity of existing and newly rehabilitated portions of the storm drain. The Contractor shall prepare a working drawing submission detailing his proposed methods and materials for the maintenance of stream flow. Bypass pumping may be considered by the Contractor. Work will not commence until the shop drawings have been accepted by the Engineer.

At a minimum, the Contractor shall provide a sandbag diversion. Each sand bag diversion shall be constructed to ensure that water is continuously channeled without water leaking or overtopping the sandbag diversion. The Contractor is hereby notified that he shall be responsible for any and all damage to the work caused by flood and/or storm events including floating debris, and shall take all necessary precautions to protect the work areas from same. For the Contractor's information and use, flow rate data (depth, velocity and dissipation times) taken during calendar year 2007 is available for the existing Central Avenue storm drain upon request.

At a minimum, the Contractor shall maintain the sandbag diversion to ensure that all requirements of this Special Provision are met. No sandbags shall leak either through its fabric or opening. Torn or damaged sandbags shall be replaced by the Contractor at his sole cost. In addition, the Contractor shall be responsible to recover all sand released (all applicable local sediment control laws and regulations apply). If any defects exist in the sandbag diversion, they shall be corrected immediately.

MEASUREMENT AND PAYMENT. Maintenance of Stream Flow will not be measured for payment, but will be paid for at the Contract Lump Sum price including, but not limited to, all labor, equipment, materials, sandbags, bulkheads, pipes, shop drawing submittals, and all incidentals, necessary to complete the work as specified. No additional payment will be made for sandbag diversion washout, relocation, resetting or removal. In addition, no additional payment will

be made for failure of the maintenance of stream flow system during any storm event. All damages will be repaired at the Contractor's sole cost.

CATEGORY 400
STRUCTURES

SILT REMOVAL

DESCRIPTION. This work shall consist of removing and disposing of silt from within the existing Central Avenue storm drain prior to commencing the lining operations in order to perform a structural condition inspection of the existing invert to confirm the need for repairs. The lengths of storm drain that will require silt removal and disposal shall coincide with the limits of the proposed structural liner as shown on the Plans and as directed by the Engineer.

The lengths of storm that will require silt removal is also located at the existing box culvert sections underneath the intersections of Central Avenue with Baltimore and Fayette Streets. Silt removal is required at these box culvert locations to facilitate a clean working environment when transitioning the proposed lining to existing structures to remain.

MATERIALS. None.

CONSTRUCTION. The Contractor shall maintain flow at all times during the life of the project. Reference the Maintenance of Stream Flow Special Provisions located elsewhere.

Silt removal shall be performed in a safe manner to ensure that the public and the work area are protected. Silt removed from the storm drain shall be disposed of at an approved spoil site. No silt shall be reused on any portion of the project. No silt shall be allowed to flow downstream during the removal operations.

Any damage to the existing storm drain as a result of the silt removal operations shall be repaired at the sole expense of the Contractor to the complete satisfaction of the Engineer.

MEASUREMENT AND PAYMENT. Silt Removal will be measured and paid for at the Contract unit price per cubic yard for the volume of material actually removed and disposed from the limits specified herein. No measurement or payment will be made for the removal and disposal of any water or liquid. The payment for Silt Removal as specified in the Contract Documents will be full compensation for all material, labor, equipment, tools, and incidentals necessary to complete the work.

The structural condition inspection and invert repairs will be paid for by another item included in this Contract.

CATEGORY 400
STRUCTURES

STORM DRAIN REPAIRS

DESCRIPTION. This work shall consist of performing a structural condition inspection of the existing Central Avenue storm drain and repairing the existing brick or stone storm drain with trowel grade mortar and concrete prior to beginning the rehabilitation of the storm drain via machine spiral wound PVC liner pipe as indicated on the Plans or as may be directed by the Engineer.

MATERIALS.

Trowel grade mortar: The trowel grade mortar shall be used for vertical and overhead repairs in the storm drain. The trowel grade mortar shall be a two component, fiber reinforced trowelable patching mortar that produces zero shrinkage and excellent bonding properties. The trowel grade mortar shall meet the following performance criteria:

Color	Gray
Working Time	15 minutes at 72°F
Finishing Time	20 minutes
Compressive Strength	
ASTM C 109	
2 hours	1,500 psi
4 hours	2,500 psi
3 days	5,000 psi
28 days	6,500 psi
Flexural Strength	
ASTM C 293	
28 days	700 psi
Tensile Strength	
ASTM C 190	
28 days	475 psi
Bond Strength – slant Shear	
ASTM C 882 (Modified)	2,000 psi
Shrinkage	0

Concrete: The concrete shall be used for invert repairs. The concrete shall meet the following performance criteria:

Color	Gray
Working Time	15 minutes at 72°F
Finishing Time	25 minutes
Compressive Strength	
ASTM C 109	
2 hours	2,000 psi
24 hours	3,000 psi
7 days	5,000 psi
28 days	6,500 psi
Flexural Strength	
ASTM C 293	
28 days	750 psi
Tensile Strength	
ASTM C 190	
28 days	500 psi
Bond Strength – slant Shear	
ASTM C 882 (Modified)	2,500 psi
Contraction	0
Expansion	0

Bonding agent: The bonding agent used between existing stone or brick masonry and new concrete or trowel grade mortar shall be a two-component epoxy resin system. The bonding agent shall meet the following performance criteria:

Color	Gray
Ratio A:B	1:1
Viscosity	6,000 cps
Modulus of Elasticity ASTM D 695	550,000 psi min. @ 28 days
Bond Strength, Hardened to Plastic ASTM C 882	2,000 psi min. @ 14 days

Tensile Strength ASTM D 638	6,000 psi min. @ 7 days
Tensile Elongation ASTM D 638	3% @ 7 days
Flexural Strength (Modulus of Rupture) ASTM D 790	7,500 psi @ 14 days
Compressive Strength ASTM D 695	10,000 psi min. @ 7 days
Water Absorption ASTM D 570	2 hour boil 0.40% @ 7 days
Effective Shrinkage ASTM C 883	0%
Pot Life (1 gallon)	30 mins. @ 60°F 25 mins. @ 75°F 15 mins. @ 90°F
Tack-Free Time (7.5 to 8 mils thick)	6 hrs. @ 60°F 3 hrs. @ 75° 1 hr. @ 90°F

Mortar for masonry shall conform to 903.06.

Repair and bonding materials shall be compatible.

All material shall be delivered in original, unopened containers with the manufacturer's name, labels, product identification, and batch numbers. The material shall be stored in accordance with the manufacturer's recommendations. Damaged material shall be removed from the site immediately at the sole expense of the Contractor.

CONSTRUCTION

After the silt is removed from the existing invert to remain, within the limits shown on the Contract Documents, the Contractor, prior to the start of any repair work and in the presence of the Engineer, shall conduct a thorough structural condition inspection of the existing storm drain that will receive the machine spiral wound PVC liner. The purpose of this structural condition

inspection shall be to identify the location and extent of each area of deterioration in the storm drain that shall be repaired prior to installing the machine spiral wound PVC liner pipe. The Engineer will be the sole judge of the extent of the repairs to be performed.

The Contractor shall schedule a site meeting with a representative of the manufacturer of the products to be used for performing the repairs prior to commencement of repair work.

All repairs to the existing storm drain shall be performed in dry conditions. The Contractor shall install localized flow diversions as necessary to perform the repairs under dry conditions. The repair areas shall remain dry until the repair material has fully set and is not susceptible to damage upon being subjected to flow within the storm drain. The flow diversion system shall ensure that water is continuously channeled without water leaking or overtopping the diversion system. The Contractor is hereby notified that he shall be responsible for any and all damage to the work caused by flood and/or storm events and shall take all necessary precautions to protect work areas from same.

Submittals. The Contractor shall submit the repair method and procedure including flow diversion system and all pertinent manufacturer catalog cuts including, but not limited to installation instructions, technical data sheets, and Material Safety Data Sheets (MSDS), etc., to the Engineer for approval prior to the start of work.

Execution. All deteriorated and loose existing mortar shall be raked and properly cleaned from the joints using high pressure water. Excess water shall be removed from the cavity using high pressure air. All joints shall be thoroughly wetted prior to applying the repair mortar.

Voids left by missing stones or brick shall be filled with trowel grade mortar (vertical and overhead surfaces) or concrete (invert).

The Engineer will be the sole judge of the extent of removal and of when sound material is encountered. The contractor shall contain all loose material and promptly remove it to an approved disposal site.

If at any time an area is identified as having deteriorated material exceeding a depth of 6 inches behind the original finished surface, all removal in the immediate area shall stop and the Engineer shall be notified. The Contractor shall not resume work at that given area until directed to do so by the Engineer.

The bonding agent shall be used to facilitate a bond between the existing sound stone or brick masonry and the new trowel grade mortar or concrete and shall be applied in strict accordance with the manufacturer's recommendations.

Extreme care must be exercised during removal of material so that other portions of existing construction that are to be incorporated into new construction are not damaged. Any damage caused

by the Contractor's operations to any portion of the existing structure that is to remain in place shall be repaired to the satisfaction of the Engineer, all at the sole expense of the Contractor.

The Contractor shall provide safe access to the repaired areas for the Engineer to inspect the work. Each repaired area shall be inspected for cracks, spalls, popouts, and loss of bond between repaired area and surrounding material. Each repaired area shall be checked for voids by tapping with a hammer or steel rod listening for dull or hollow sounds. Defects shall be immediately repaired to the satisfaction of the Engineer, all at the sole expense of the Contractor.

MEASUREMENT AND PAYMENT

Storm Drain Repairs will be measured and paid for at the Contract unit price per square foot of material satisfactorily placed and accepted. This item is only to be used for repairing those areas shown on the Plans or as directed by the Engineer. The payment shall be full compensation for performing the structural condition inspection of the storm drain, removing loose material, disposal of debris, cleaning the repair area to be repaired, furnishing and installing the bonding agent, trowel grade mortar, and concrete, furnishing, installing and maintaining the flow diversion system, all submittals as specified herein, and all labor, tools, equipment, materials, and incidentals necessary to complete the item.

The sum of the square foot areas shown on the Plans has been increased by 100% to account for defects that may not be visible until the silt is removed from the storm drain. All proposed repair locations not shown on the Plans shall be performed only as directed by the Engineer.

The removal of existing silt from the storm drain shall be paid for under the "Silt Removal" item.

CATEGORY 400
STRUCTURES

REINFORCED MACHINE SPIRAL WOUND PVC LINER PIPE

DESCRIPTION. Reinforced Machine Spiral Wound PVC Liner Pipe shall consist of furnishing all materials, equipment and labor to install a continuous, grouted-in-place, machine spiral wound polyvinyl chloride liner pipe system inside of the existing Central Avenue storm drain to the limits and locations as specified on the Plans and in accordance with these Special Provisions and as may be directed by the Engineer.

MATERIALS. The materials specified for the system shall meet the following requirements:

Polyvinyl Chloride (PVC) Profile Strip	ASTM D 1784 with a cell classification of 12344 or 13454 or higher
Steel Reinforcing for Profile Strip	ASTM A 653
Reinforcement Steel	908.01

Grout. High strength annulus structural grout shall have a minimum compressive strength of 5,000 psi when tested in accordance with ASTM C 109 and shall consist of Portland cement, water and some portion of the following: fly ash, lime, admixtures, bentonite clay, and/or sand. The grout mix design shall be as designed and proposed by the manufacturer of the PVC profile strip. Reference the section on Construction for submittal requirements. Flow characteristics of the proposed grout and maximum drying shrinkage shall be compatible with the field conditions under which the grout will be installed.

The Contractor shall engage the services of an approved independent testing laboratory to make and test grout cubes at no additional cost to the City. A copy of all laboratory results shall be furnished to the Engineer. The grout shall be tested by making one set of 2 inch cubes from each truck when the grout is being pumped into the annular space. A set of cubes shall consist of two (2) cubes to be tested at seven (7) days, and two (2) cubes to be tested at 28 days. The test cubes shall be made and tested in conformance with ASTM C 109, with the exception that the grout shall be restrained from expansion by a top plate.

The PVC profile strip geometry shall be compatible with the system selected for installation and suitable for installation into the existing Central Avenue storm drain configurations as shown on the Plans. It shall meet the requirements for Type "B" in accordance with ASTM F 1697-09. The PVC profile type designation to be used for lining of the Central Avenue storm drain shall be selected by the Contractor based on the analysis of the installation conditions. The in-service conditions of the storm drain lining after the grout has been placed and fully cured is not dependent on the PVC profile strip for strength. The profile dimensions, area, moment of inertia, and stiffness factor shall be specified for each of the liner pipe profile types shown in the Plans.

The PVC profile strip shall be shipped on appropriately sized reels for ease of handling and product protection. The product shall be inspected for defects at the time of manufacture and again in the field prior to installation. Defects to the PVC profile strip include, but are not limited to, gouges, abrasion, flattening, cuts, punctures, and ultra-violet (UV) degradation. Defective product shall not be installed and shall be removed from the project site. Handling and storage of the PVC profile strip reels shall be in accordance with the manufacturer's instructions.

All other products required to complete the machine spiral wound PVC lining process shall be handled and stored in accordance with the manufacturer's instructions. Each product shall be accompanied by its relevant specification and MSDS information.

The PVC profile strip shall be distinctly marked on its inside surface at appropriate intervals with a code number identifying the manufacturer, plant, date of manufacture, and profile designation.

All other products required to complete the machine spiral wound PVC lining process shall be distinctly marked with product type and manufacturer.

Contractor Qualifications. The Contractor's personnel involved in installing the machine spiral wound PVC pipe liner shall be certified by the pipe liner manufacturer that they have successfully completed the appropriate training in handling, jointing, insertion, trimming, and finishing the pipe liner system as shown in the Plans.

The work shall be performed by a Contractor who has a proven record of performance for similar installations. The Contractor shall submit resumes for superintendents, foremen, and other applicable lead personnel for field installation crews demonstrating competency and experience to perform the work scope as defined in this Special Provision and as shown in the Plans.

The PVC profile strip manufacturer shall present a letter of qualification certifying the fitness of their product(s) for use in the machine spiral wound PVC lining system as designed and in conformance to the requirements of this Special Provision and the Plans. This certification shall also provide the history of successful application of the product and shall verify that the product has previously been supplied to and successfully installed by the Contractor.

Products used in the machine spiral wound PVC liner pipe system shall be provided by RibLoc Group Limited, Danby of North America, Inc. or Sekisui SPR Americas, LLC, or approved equal.

Quality Assurance. Materials supplied as part of the machine spiral wound PVC pipe liner system shall meet the following requirements:

1. A653/A653M-09a Standard Specification for Steel Sheet, Zinc-Coated (Galvanized) or Zinc-Iron Alloy-Coated (Galvannealed) by the Hot-Dip Process.

2. C109-08 Standard Test Method for Compressive Strength of Hydraulic Cement Mortars (Using 2-in. Cube Specimens).

3. ASTM C940-98A Standard Test Method for Expansion and bleeding of Freshly Mixed Grouts for Preplaced-Aggregate Concrete in the Laboratory.

4. ASTM C1090 - 01(2005)e1 Standard Test Method for Measuring Changes in Height of Cylindrical Specimens of Hydraulic-Cement Grout.

5. D256-06ae1 Standard Test Methods for Determining the Izod Pendulum Impact Resistance of Plastics.

6. D638-08 Standard Test Method for Tensile Properties of Plastics.

7. D648-07 Standard Test Method for Deflection Temperature of Plastics Under Flexural Load in the Edgewise Position.

8. D1784-08 Specification for Rigid Poly(Vinyl Chloride) (PVC) Compounds and Chlorinated Poly (Vinyl Chloride) (CPVC) Compound.

9. F1697-09 Standard Specification for Poly (Vinyl Chloride) (PVC) Profile Strip for Machine Spiral-Wound Liner Pipe Rehabilitation of Existing Sewers and Conduit. (Amendment in process to include non-circular applications).

10. F1741-08 Standard Practice for the Installation of Machine Spiral Wound Poly(Vinyl Chloride) (PVC) Liner Pipe for Rehabilitation of Existing Sewers and Conduits (Amendment in process to include non-circular applications).

CONSTRUCTION. Construction of the machine spiral wound PVC liner pipe system shall be in conformance with ASTM F 1741-08 except as may be modified herein. In situ fabrication of the machine spiral wound PVC liner pipe system shall be completed using traveling installation equipment.

Submittals. The following submittals shall be made to the Engineer for review and acceptance prior to the start of work:

1. Cleaning method(s) of existing Central Avenue storm drain. Methods of containing, collecting and disposing of the wash water shall also be included in the event that cleaning agents are used or potential harmful material is encountered in the wash water.

2. Data collected from the pre-installation inventory inspection, including a video survey of existing Central Avenue storm drain.

3. Work plan for spiral winding process including details of all materials and equipment to be used during the winding process. This work shall also include the Contractor's proposed bypass pumping plan for diverting base flow if different from that as shown on the Plans.

4. Work plan for installation of the machine spiral wound PVC liner pipe system shall contain but not be limited to the following information:

   a. The PVC profile strip to be used for each of the liner types specified in the Plans. Information shall include, but not be limited to the profile dimensions, area, moment of inertia, and stiffness factor. Design calculations supporting the selection of the PVC profile strip shall be included. Calculations shall be certified by a Professional Engineer registered in the State of Maryland.

   b. Location of the insertion and termination points and limits of each production run, by Type, for the machine spiral wound PVC liner pipe system.

   c. Spacing and details of bulkheads, details of the bracing system (including design calculations sealed and signed by a Professional Engineer registered in the State of Maryland), and grout injection/vent holes.

   d. Method of supporting and securing the PVC profile strip so as to maintain the minimum gap between the invert of the PVC profile strip and the invert of the existing storm drain.

   e. Method of grouting, including use of continuous or staged lifts. If continuous grouting will be performed, provide information on methods to be used to prevent floating of the PVC profile strip.

   f. Grout mix design showing that the proposed grout mix will satisfy the requirements of this Special Provision and the requirements of the design as indicated on the Plans.

   g. Method of supporting and securing the reinforcement steel located above the PVC profile strip.

   h. Method and sequence of operations associated with installing the tap-ins for the existing and proposed lateral storm drains and/or manholes.

   i. Method of installing the machine spiral wound PVC liner pipe system within the limits shown on the Plans designated as the Junction Transition.

   j. Method of mobilizing and demobilizing the equipment inside of the existing storm drain.

   k. Detailed information on the access pits in the event that mobilization and demobilization is not performed via the existing manholes. This information shall include the limits of excavation, removal limits of the existing storm drain, method of installing the liner system within the limits of the access pit, grouting in the area of the access pit, and restoring the surface conditions.

      The roadway surface above access pits outside the limits of roadway construction shall be repaired in accordance with Baltimore City Detail No. BC-576.20. The flexible surface

course and binder course layers shall be revised to 2" thick each. Backfill over culvert shall be Graded Aggregate Base for Backfill.

1. Provisions to protect the work area during high flow events. A plan of action shall also be prepared for those storm events that require removal of the materials and equipment from within the storm drain. Flow rate data (depth, velocity and dissipation times) taken during calendar year 2007 is available for the existing Central Avenue storm drain upon request.

5. Documentation for the steel strip reinforcing confirming that the steel satisfies the requirements of this Special Provision and the requirements of the design as indicated on the Plans.

6. Documentation for the PVC profile strip material confirming that the material satisfies the requirements of this Special Provision and the requirements of the design as indicated on the Plans.

7. Shop drawings for the placement of reinforcing steel bars including a schedule of material, bar marks, bar laps and method of support for reinforcing steel bars at specific locations along the length of the entire storm drain being lined.

8. Catalog data showing manufacturer's clarifications and updates, ASTM references, material composition, specifications, physical properties and chemical resistance of PVC liner.

9. PVC Pipe liner manufacturer's recommended procedures for handling, storing, repairing, and installing the PVC pipe liner.

10. Certified statement from PVC pipe liner manufacturer that the Contractor is an approved installer of their system with certificates of training for each crewmember involved in the lining process from the manufacturer.

11. Television inspection reports, color videos, and CD-ROM's made before and following the lining of the Central Avenue storm drain, and original copies of videotaped inspection furnished to the Engineer.

Safety. The required work shall be completed and performed in accordance with all applicable OSHA standards pertaining to working in permit confined spaces.

Preparation. Unless otherwise specified on the Plans, the Contractor may utilize any of the existing manholes in the project area as access points. Should temporary excavations be needed to access the Central Avenue storm drain, such work shall be coordinated with the Engineer. Excavations shall be sloped or shored in accordance with all applicable safety regulations. In the event that shored excavation is required, working drawings and design calculations certified by a professional engineer registered in the State of Maryland shall be submitted for review and approval.

Cleaning and Repair. All debris and obstructions shall be removed from the Central Avenue storm drain and disposed of in accordance with the requirements of the contract, and local codes and ordinances. A high pressure water jet shall be used to clean and prepare the surface of the storm drain. The pressure used to clean the storm drain shall be sufficient to adequately clean the elements, but not too high where as it causes damage to the storm drain. Any damage to the storm drain that is a result of the cleaning process shall be repaired at the sole expense of the Contractor to the complete satisfaction of the Engineer. All loose material, acids, grease and other deleterious substances shall be removed during cleaning, and the prepared surface shall be suitable for bonding with cementitious grout. The existing storm drain shall also be repaired in conformance with the Special Provisions and at the locations and limits as shown on the Plans.

If cleaning agents are used to aid in the cleaning of the existing storm drain, the wash water shall be collected in its entirety and disposed of at an approved facility for handling of this material at no additional cost to the City. Wash water that contains oily residue or other potentially harmful material to the waterway shall also be collected in its entirety and disposed of at an approved facility for handling of this material at no additional cost to the City.

Pre-Installation Inventory Inspection. After cleaning and repairing the existing storm drain, but prior to installing the PVC profile strip material, the Contractor, in the presence of the Engineer, shall perform a pre-installation inventory inspection of the existing Central Avenue storm drain for the entire limits of the proposed work to ensure there are no excessive variations in the storm drain profile and no obstructions that would hinder the machine spiral winding process. The Contractor shall also verify that the proposed PVC profile strip is suitable for the existing Central Avenue storm drain geometry. The longitudinal and radial locations of all drainage side connections to the existing Central Avenue storm drain shall be logged for subsequent reinstatement.

The pre-installation inventory inspection shall clearly log all locations of existing laterals, manholes, obstructions, section changes, etc. that tie into the storm drain. In addition to copies of the logs, a video survey shall be performed of the entire storm drain to receive the PVC liner pipe system. The video inspection shall be furnished in DVD and AVI format.

Removal of Obstructions. Removal of the existing obstructions, which includes but is not limited to existing support systems (e.g., struts and braces) that are located within the storm drain shall not be removed until the liner installation has progressed to the location of the obstruction and all loading with exception of the earth fill above is removed from the storm drain. Removal of the existing obstructions shall only be performed as directed by the Engineer.

Installation. Winding of the PVC profile strip shall conform to the Contractor's accepted submittals. The installation system shall provide precise control of the internal dimensions of the newly formed PVC lining to ensure the specified annular grout space is maintained throughout the length of storm rain to be rehabilitated. The PVC profile strip shall be wound using equipment that is self-running (i.e., the winding machine traverses down the existing Central Avenue storm drain

forming the spiral wound PVC liner as it goes). The winding process shall be continuous until the machine spiral wound PVC liner is complete for the specific length of the storm drain to be rehabilitated.

The annulus grouting shall conform to the Contractor's approved submittals. After the spiral wound PVC liner has been installed, and before the annulus is grouted, the Contractor shall restore service at all connections. Field conditions will dictate whether service restoration can be done from inside the conduit or whether restoration will require the exterior of the conduit and connecting pipes to be exposed. Grouting shall be done between bulkheads installed at pre-determined distances apart along the storm drain. Prior to grouting, a bracing framework shall be installed which shall be designed by the Contractor to serve the following functions during grouting:

1. Prevent flotation of the machine spiral wound PVC liner.

2. Align the PVC liner within the storm drain so that the required annular space is maintained between the PVC liner and the storm drain.

3. Prevent excessive deflection or buckling of the PVC liner.

Structural grout shall be pumped into the annular space through pre-drilled locations around the circumference of the spiral wound PVC liner. Vent holes shall be provided at suitable locations to permit air to be expelled from the annular space and to monitor grout fill levels. Grouting may be performed in one or more lifts in order to completely fill the annular space. Grout shall be sampled and tested as previously indicated in these Special Provisions.

Completion of Work and Site Restoration. The ends of the machine spiral wound PVC liner shall be securely grouted in position. The PVC liner shall be sealed to the storm drain with material capable of achieving a watertight seal. Any step(s) in the flow line at the ends of the rehabilitated storm drain shall be blended into the existing flow line using appropriate materials. Any holes made in the PVC profile strip during the grouting operation shall be sealed using means and methods as approved by the Engineer. At points where temporary excavation was required for access to the storm drain and/or lateral drainage pipe connections, appropriate encasement shall be provided for the exposed PVC profile strip and/or connecting pipes. Encasement materials may consist of concrete, sand slurry, or other suitable materials as approved by the Engineer.

Final Acceptance. The rehabilitated Central Avenue storm drain may be subject to a final inspection, and no such work shall be scheduled or started without having made prior arrangements with the City to provide for the required inspections. Not less than 24 hours notice shall be provided to the City for scheduling such inspections. This inspection must confirm that the storm drain is properly rehabilitated in accordance with the Contract Documents and is complete without defect and groundwater infiltration is not present. If defects are observed, a suitable repair procedure shall be proposed by the Contractor for review and approval by the Engineer all at no cost to the City.

MEASUREMENT AND PAYMENT. Machine Spiral Wound PVC Liner Pipe will be measured and paid for at the Contract unit price per Linear Foot of pertinent Machine Spiral Wound PVC Liner Pipe installed and accepted. The payment for the pertinent Machine Spiral Wound PVC Liner Pipe (which constitutes Types 1 through 7) as specified in the Contract Documents will be full compensation for all material, labor, equipment, tools, and incidentals necessary to complete the work including PVC profile strip, reinforcing steel bars, structural grout, installation equipment including temporary bracing and bulkheads for grouting operations, removal of obstructions, pre-installation inventory inspection, post inspection, all submittals, and repair of grout injection ports. High pressure water jet cleaning of the existing storm drain will be paid for as specified below. Storm drain repair a nd silt removal w ill be paid for as specified elsewhere in these Special Provisions.

Structural grout for Machine Spiral Wound PVC Liner Pipe will not be measured and paid for separately but will be incidental to the Contract unit price per foot of pertinent Machine Spiral Wound PVC Liner Pipe installed and accepted. The payment for the pertinent Machine Spiral Wound PVC Liner Pipe per foot as specified in the Contract Documents will be full compensation for all material, labor, equipment, tools, and incidentals necessary to complete the structural grout work including furnishing and installing the grout material, marking and testing of the test cubes, furnishing and installing the injection and vent ports and preparation and approval of mix design submittals. **The Contractor is hereby notified that the quantities of grout to be furnished and installed as indicated on the Plans are an estimate of the neat quantity only based on the average end area method of computing volume quantities taken from the various cross sections and do not reflect surface irregularities or voids, gaps, cracks, seams or other surface imperfections in t he existing storm drain that could affect the actual quantity of grout installed. In addition, the quantity shown on the Plans does not account for material waste resulting from the Contractor's specific method of installation that could affect the actual volume installed. The quantities provided on the Plans are for the Contractor's reference and information only. The City makes no guarantees as to the accuracy of the quantity of grout to be installed as shown on the Plans. The Contractor shall make his own determination of the quantity of grout to be furnished and installed to the limits as indicated on the Plans and prepare his bid accordingly. No additional payment will be made for the structural grout material.**

Site Set Up for Machine Spiral Wound PVC Liner Pipe will not be measured for payment, but will be paid for at the Contract Lump Sum price including, but not limited to, all materials, labor, equipment, tools, and incidentals necessary to set up the equipment within the storm drain for each liner profile type shown on the Plans.

Access Pit for Machine Spiral Wound PVC Liner Pipe will not be measured for payment, but will be paid for at the Contract Lump Sum price. The payment will be full compensation for excavation, support of excavation, partial removal of the existing storm drain to the limits necessary for the access pit, forming, curing, form removal, and all materials, labor, equipment, tools, and incidentals

necessary to complete the work. Payment for the machine spiral wound PVC liner pipe, structural grout, backfilling, roadway subgrade and pavement, and any required maintenance of traffic will be paid for under other items within the Contract. Payment for roadway patch will be made under the items Variable Depth Graded Aggregate Base for Backfill, 8 Inch Reinforced Portland Cement Concrete Pavement Mix 7, HMA Superpave Base Course 19 mm Pg64 22 Level 2, and HMA Superpave Surface Course 12.5 mm Pg76 22 Level 2.

High pressure water jet cleaning of the existing storm drain will not be measured but will be paid for at the Contract lump sum price for the High Pressure Water Jet Cleaning of Storm Drain item as specified. The entire interior surface of the existing storm drain to be lined shall be cleaned. Payment for this work will include containing, collecting and disposing of the wash water as necessary.

Lateral connections made to the machine spiral wound PVC liner pipe installed in the existing storm drain will be measured and paid for at the Contract unit price per each of Lateral Connections for Machine Spiral Wound PVC Liner Pipe, Various Sizes installed and accepted. The payment for the Lateral Connections for Machine Spiral Wound PVC Liner Pipe, Various Sizes as specified in the Contract Documents will be full compensation for all material, labor, equipment, tools, and incidentals necessary to complete the work as specified on the Plans. Payment for this item per each work will be the same regardless of the size and/or shape of the lateral pipe connections made to the machine spiral wound PVC liner pipe installed in the existing storm drain.

CATEGORY 400
STRUCTURES

12-INCH REINFORCED CONCRETE BLOCK WALL WITH GROUT FILL

DESCRIPTION. This work shall consist of placing reinforced concrete block wall where the cavities indicated on the plans are to be blocked and filled. The work to be performed under this item includes furnishing mortar and accessories for masonry work, furnishing and installing concrete block masonry, furnishing and installing reinforcing steel, grout fill in the masonry unit cells and 2 ply waterproofing membrane, as indicated on the Plans.

MATERIALS.

A. Mortar Materials

1. Cement shall conform to ASTM C 150, Type I.

2. Hydrated Lime shall conform to ASTM C 207, Type 'S'.

3. Sand (Fine Aggregate) shall be clean, sharp, masonry sand conforming to ASTM C 144.

4. Water: Potable and free from amounts of minerals and organic substances that would effect the color and strength of the mortar or may be deleterious to the mortar or any metal in the wall.

5. Admixtures: Do not use anti-freeze compounds, accelerator or other admixtures.

B. Mortar Mixes

Mortar shall be composed of one part Portland Cement, one part hydrated lime and not less than 2½ to not more than 4 parts masonry sand. Mortar shall conform to the requirements of ASTM C 270, Type M with an average compressive strength of 2500 psi at 28 days.

C. Grout

Grout shall conform to the requirements of ASTM C476. Mix shall be composed of 1 part Portland Cement, 2 1/4 to 3 parts sand, 1 to 2 parts gravel. Gravel shall be pea-gravel. Slump shall be 8" with minimum strength of 2,500 psi.

D. Accessories

1. Continuous Wall Reinforcement

Prefabricated continuous reinforcing tie system fabricated of wire conforming to ASTM A82. Flush welded cross-ties, 9 gauge wire, hot-dip galvanized after fabrication in accordance with ASTM A153, Class B2, 1.50 ounces for the side and cross-rods.

Wall reinforcement in the size to fit the wall in which it is used.

2. Bar Reinforcing Steel - conform to ASTM A615, Grade 60.

3. Vertical Bar Positioner - prefabricated from 9 gauge wire in a size to fit the wall in which it is used.

E. Concrete Masonry Units

1. Use the product of one manufacturer. Block with face size 7-5/8 inches by 15-5/8 inches and thickness as shown on the Contract Documents.

2. The blocks shall have a uniform medium texture, free from defects, and of uniform dimensions so that courses and joints will line up.

3. Concrete blocks shall be cured in an autoclave with high-pressure steam at 125 to 150 pounds pressure and at temperature of 350 degrees F. Moisture content in units at time of delivery to the site shall not exceed 30 percent of the maximum absorption of the units.

4. Units shall be free from iron or other substances that will stain the surface.

5. Use normal weight, hollow, load bearing, concrete masonry units conforming to ASTM C90, Grade N, Type I.

CONSTRUCTION.

Mixing of Water:

1. Mix mortar for at least five minutes in a clean mechanical mixer to a uniform consistency. Mix cement and sand dry and add putty. Do not mix mortar in quantities exceeding that which can be used immediately.

2. Mix mortar with the minimum amount of water consistent with good workability on the board to provide maximum tensile bond strength within capacity of the mortar.

3. Do not use mortar older than two hours after initial mixing, or mortar which is partially set or frozen.

4. Use method of measuring materials and mortar that will control and accurately maintain the specified proportions during the entire progress of the work. "Shovel measure" will not be accepted. Measure sand in a damp loose condition.

Preparation:

1. Clean dirt, debris, oil, grease, and other foreign substances which would affect bond of mortar, from surfaces to receive concrete block masonry.

2. Ascertain the location of openings for pipes, conduits and ducts.

Erection:

1. Plumb all walls and partitions. Use level courses with uniform joint thickness.

2. Place wall reinforcement continuously as shown on the Contract Documents.

3. Place vertical bar reinforcing in the cells of the masonry units where shown on the Contract Documents. The concrete fill shall be carefully placed and tamped to insure a dense mass without voids or air pockets.

4. The vertical bars shall be held in place with a bar positioner near the top and bottom of each wall being constructed. The vertical spacing of the bar positioners shall not exceed 10 feet.

5. Keep masonry clean by stiff brushing as the work progresses.

6. Do not wet concrete block units before placing in the wall. Lay units to a line with full mortar coverage on vertical and horizontal face shells and in running bond. Use concave joints. Use a power-drive carborundum disc blade for cutting of units. Remove all mortar smears and drippings on exposed faces of concrete masonry.

7. Carefully cut the faces of units for all utility penetrations. Where possible, use full-size units. Do not use portions of a unit shorter than 4 inches.

8. Provide and set all concrete block work of the sizes as shown on the Contract Documents.

9. Build walls true and plumb to line.

MEASUREMENT AND PAYMENT. This item will be measured and paid for at the Contract unit price per of square foot of wall as seen in elevation actually placed and accepted, where indicated on the Contract Documents. Payment will be full compensation for furnishing and installing the masonry units, reinforcing, bar positioners, anchors, grout fill, curing and cleaning, 2 ply waterproof membrane, and all labor, tools, materials, equipment, and incidentals necessary to complete this work.

CATEGORY 500
PAVING

CONSTRUCTION FABRIC

DESCRIPTION. Furnish and install Construction Fabric on the sub-grade in areas of pavement reconstruction as specified or as directed by the Engineer.

MATERIALS. Construction Fabric shall meet the requirements of AASHTO M-288, Class 2.

CONSTRUCTION. The Contractor shall install the Construction Fabric in accordance with the Manufacturer's specifications and as directed by the Engineer. Widths and lengths of fabric shall be overlapped a minimum of two feet (2').

MEASUREMENT AND PAYMENT. Construction Fabric will be measured and paid for at the Contract unit price per square yard for the total square yards installed and accepted. The overlaps will not be measured and shall be considered incidental to this item. The payment will be full compensation for all material, labor, equipment, tools, and incidentals necessary to complete the work.

CATEGORY 500
PAVING

FURNISH FRAME AND COVER
(VARIOUS SIZES)

DESCRIPTION. The Contractor will be required to furnish and deliver new manhole frames and covers, hand box frames and covers, inlet grates and frames, and the inlet heads from the appropriate vendor to the project site as directed by the Engineer.

MATERIALS. Refer to the Baltimore City Standards for the applicable utility cover details.

MEASUREMENT AND PAYMENT. Furnished Frame and Cover will be measured on the basis of count or number of each size. Furnished Frame and Cover shall be paid for on the basis of the Contract unit price bid per each for Furnish Frame and Cover – Less than 12 In. Diameter Cover, Furnish Frame and Cover – 12 In. to Less than 30 In. Diameter Cover, or Furnish Frame and Cover – 30 In. Diameter and Larger, Including Inlets, whichever is applicable. Payment shall include the removal and disposal of the existing materials and all incidentals necessary to complete the work.

Payment for this item shall also include installation of the new frame and cover. The adjustment of utility structures to final grade within the areas of both full-depth pavement reconstruction and pavement resurfacing will be paid for under the HMA and/or Concrete Paving item.

CATEGORY 500
PAVING

SECTION 504 — HOT MIX ASPHALT PAVEMENT

504.03 CONSTRUCTION

470 **DELETE: 504.03.04 Tack Coat** in its entirety.

INSERT: The following.

504.03.04 Tack Coat. Dry and clean the surface of all loose and foreign materials prior to application of the tack coat. Apply the tack coat uniformly across the surface as directed using an application rate of 0.01 to 0.05 gal/yd^2.

476 **DELETE: 504.03.12 Thin Lifts and Wedge/Level Courses** in its entirety.

INSERT: The following.

504.03.12 Thin Lifts and Wedge/Level Courses. When the HMA course is determined by the Engineer to be a thin lift in accordance with the "Thin Lift Mix Design Identification Table" in Section 904.04.03, construct a 400 to 500 ft control strip on the first day of paving to determine optimum pavement density.

Using an asphalt density gauge in accordance with the manufacturer's recommendation, take readings from the control strip in 5 random locations to determine roller patterns and the number of passes needed to obtain optimum density. Optimum density is defined as when the average density does not change by more than 1.0 percent between successive roller passes and the percent density is between 90.0 and 97.0.

Core the five random gauge reading locations to verify the gauge calibration and to determine the percent pavement density. The cores will be tested by the contractor's QC laboratory and results will be verified by the Office of Materials Technology. The QA cores will be saved by the contractor and made available to the Administration for retesting until the end of the project or as otherwise determined.

On the first day of paving, the target optimum density will be determined using the density gauge readings from the control strip; verified by the core results. The lot average density from the five control strip cores will be used as the target optimum density.

Take a minimum of 10 QC/QA gauge readings daily from random locations per day's paving per mix or two per 500 tons of paving per mix; whichever yields the higher frequency of locations. A density lot is defined as a day's paving per mix. A sublot shall not exceed 500 tons. A paving day shall begin with a new lot and sublots.

For the remainder of the project, any lot average 2.0 percent or more below optimum and below 92 percent shall require a new control strip to be constructed, tested and approved before paving continues.

Take a minimum of 2 QA cores daily when production is in excess of 500 tons per location, or when successive days of less than 500 tons production totals 1000 tons or greater. If the average of the two density gauge readings and the average of the two respective QA core densities are within 3.0 lb per cubic foot, the Administration will accept all the daily density gauge readings. If they do not compare within 3.0 lb per cubic foot, a new control strip will be run and the density gauge recalibrated.

Wedge/Level courses placed at variable thicknesses shall be tested and accepted in accordance with this Thin Lift specification. Incentives are not applicable.

504.04 MEASUREMENT AND PAYMENT.

478 **DELETE: 504.04.01 Price Adjustment for Asphalt Binder** in its entirety.

INSERT: The following.

504.04.01 Price Adjustment for Asphalt Binder. A Price Adjustment (PA) will be made to provide additional compensation to the Contractor or a credit to the Administration for the fluctuation in the cost of asphalt binder.

For adjustment purposes, the prevailing base index price will be the price specified for PG 64-22 Asphalt Binder posted at www.roads.maryland.gov (Business Center /Contracts Bids and Proposals) at time of bid opening. Cost differentials between PG 64-22 and a binder specified shall be included in the price bid per ton for Hot Mix Asphalt. A historical database will be maintained by the Administration.

The PA will be made when the index price for the month of placement increases or decreases more than 5 percent of the prevailing base index price. Computations will be as follows:

$$\text{Percent Change} = ((Pp - Pb)/ Pb) \times 100$$

$$PA = T \times Q \times ((Pp - (D \times Pb))$$

Where:

PA = Price Adjustment for the current month
T = Design target asphalt content expressed as a decimal
Q = Quantity of Hot Mix Asphalt placed for the current month
Pp = Index price for PG 64-22 Asphalt Binder per ton for the month of placement
D = 1.05 for increases over 5 percent; 0.95 for decreases over 5 percent
Pb = Prevailing base index price for PG 64-22 Asphalt Binder per ton

PA resulting in increased payment to the contractor will be paid under the item Price Adjustment for Asphalt Binder. The item amount will be established by the Administration and shall not be revised by the Contractor. PA resulting in a decreased payment will be deducted from monies owed the Contractor.

479 **DELETE: 504.04.02 Price Adjustments for Hot Mix Asphalt Mixture and Pavement Density** in its entirety.

INSERT: The following.

504.04.02 Payment Adjustments for Pavement Density and Hot Mix Asphalt Mixture. Payment adjustments for pavement density will be based on individual sublot core test data for a given lot and the lot average density as specified in this section and Table 504A. Payment reductions for density and for mixture will be made by adjusting the payment for Hot Mix Asphalt. Incentive payments will be made using the Contract items for Pavement Density and Hot Mix Asphalt Mixture. The item amounts established by the Administration shall not be revised. Payment reductions for density will be waived for portions of the pavement where a poor foundation is determined as the cause for inadequate density.

TABLE 504A		
Dense Graded HMA Mixes – Percent of Maximum Density		
Lot Average % Minimum	No Individual Sublot Below %*	Pay Factor (DF)
94.0	94.0	1.050
93.8	93.7	1.045
93.6	93.4	1.040
93.4	93.1	1.035
93.2	92.8	1.030
93.0	92.5	1.025
92.8	92.2	1.020
92.6	91.9	1.015
92.4	91.6	1.010
92.2	91.3	1.005
92.0	91.0	1.000
91.8	90.8	0.990
91.6	90.6	0.980
91.4	90.4	0.970
91.2	90.2	0.960
91.0	90.0	0.950
90.8	89.8	0.940
90.6	89.6	0.930
90.4	89.4	0.920
90.2	89.2	0.910
90.0	89.0	0.900
89.8	88.8	0.890
89.6	88.6	0.880
89.4	88.4	0.870
89.2	88.2	0.860
89.0	88.0	0.850
88.8	87.8	0.840
88.6	87.6	0.830
88.4	87.4	0.820
88.2	87.2	0.810
88.0	87.0	0.800
Less than 88.0	87.0	0.750 or rejected by Engineer

Note 1: When any test data is above 97.0, the Engineer may reject the lot. When not rejected, the lot will receive a pay adjustment in accordance with the following:
(a) When the density lot average is above 97.5, the pay factor = 0.750.
(b) When 3 sublot densities are above 97.0, the pay factor = 0.950.
(c) When 4 or more sublot densities are above 97.5, the pay factor = 0.750.

Note 2: Pay incentive or pay disincentive will not be paid for placements identified as wedge/level courses or thin lift courses.

*Note 3: When the Contractor's core specific gravity data does not compare with the Administration's core specific gravity data, only the Administration's single sublot values and lot average value will be used in acceptance decision.

*Note 4: The average sublot values and the lot average will be used in acceptance decision.

Acceptance of a mixture lot will be in conformance with Sections 904, 915, and MSMT 735. A composite pay factor (CPF) for asphalt content and gradation will be based on the total estimated percent of the lot that is within Specification limits as computed using the quality level analysis in conformance with MSMT 735.

Payment adjustments will be computed as follows:

Density Lot Payment Adjustment = (DF – 1) x (AP) x (TL)

Mix Design Lot Payment Adjustment = (MF – 1) x (AP) x (TL)

where:

MF = Mixture pay factor [0.55 + (0.5 x CMPWSL)]
Refer to MSMT 735 for CMPWSL.
DF = Density pay factor from Table 504A.
AP = Adjusted/applicable unit price per 504.04.01.
TL = Applicable tonnage per lot.

An in-place density lot containing material with a pay factor of less than 1.000 may be accepted at the reduced pay factor provided the pay factor for density is at least 0.800, and there are no isolated defects.

A mixture lot containing material with a pay factor of less than 1.000 may be accepted at the reduced pay factor provided the composite pay factor for asphalt content and grading is at least 0.750, and there are no isolated defects.

An in-place density lot containing nonconforming material that fails to obtain at least a 0.800 pay factor and a mixture lot containing nonconforming material that fails to obtain at least a 0.750 pay factor for asphalt content and gradation will be evaluated to determine acceptance. Lots that are rejected shall be replaced.

Lots with less than five Quality Control or Quality Assurance samples per in-place density lot will not be evaluated for incentive payment.

When less than three mix samples have been obtained at the time of the acceptance sampling or at the time a lot is terminated, the Engineer will determine if the material in a shortened lot will be considered a part of the previous lot or whether it will be accepted based on the individual test data.

CATEGORY 500
PAVING

SECTION 504 — HOT MIX ASPHALT PAVEMENT

SAWCUTTING AND SEALING OF HOT MIX ASPHALT PAVEMENT

DESCRIPTION.
Sawcut, clean and seal transverse joints in new Hot Mix Asphalt (HMA) overlays.
Construct transverse HMA pavement joints over, and in line with, the underlying transverse Portland cement concrete pavement joints contained in the contract documents and as directed by the Engineer.

MATERIALS.
Sealant. Use a sealant meeting the requirements of Section 911.01, Joint Sealer and Crack Filler, and ASTM D6690 Type II; Joint and Crack Sealants, Hot Applied, for Concrete and Asphalt Pavements. Deliver the sealant in the manufacturer's original sealed container legibly marked with the following information:

- Manufacturer's name.
- Trade name of sealant.
- Manufacturer's batch or lot number.
- ASTM D6690, Type II.
- Minimum application temperature.
- Maximum (or Safe) heating temperature.

Provide the Engineer with a copy of the manufacturer's recommendations pertaining to heating and application of the sealant prior to commencing work.

Bond Breaker Tape. Use ordinary masking tape or a suitable bond breaker tape designed for use with hot poured sealants. The width of the tape shall be equal to the width of the sawcut (tolerances: -1/8 in., + 0 in.).

CONSTRUCTION.
General. Sawcut, clean, and seal transverse joints as a single operation within seven (7) days after placing the HMA surface course. Sawcut, clean, and seal joints that are damaged by traffic at no additional cost to the City.

If the HMA surface course is to be placed the following paving season, sawcut the HMA base course to provide a 1 inch deep by 1/8 inch wide channel to facilitate and control reflective cracking. Provide a means of properly referencing the sawcut to be made in the HMA surface course. Sawcut the HMA base course within seven (7) days after it is placed and before any evidence of reflective cracking has developed. Do not seal these sawcuts.

Sawcutting of Transverse Joints. Sawcut transverse joints to the appropriate dimensions shown in the contract details. Locate sawcut joints directly over the existing Portland cement concrete pavement joints using a pins-and-stringline method. The details of the method for locating the sawcuts are to be approved by the Engineer. Sawcutting blades shall be of such size and

configuration that the desired dimensions of the sawcut can be made with one pass. Either dry or wet cutting will be allowed. No spacers between blades will be allowed.

Sawcut joints to the full extent of the underlying Portland cement concrete pavement joints or as shown in the contract documents. Transverse joints that are offset at the longitudinal joint by more than 1 inch measured between the centers of the joint cavities require separate sawcuts terminating at the longitudinal joints.

Joint Preparation. Prepare joints for sealing on the same day that they are to be sealed. Wash wet sawcut joints with a water blast (50 psi minimum) after sawing to remove any sawing slurry, dirt, or deleterious matter adhering to the joint walls or remaining in the joint cavity. Wash slurry from the pavement surface when the wet process is used. Blow or brush dry dust and material from the pavement surface when the dry sawcut process is used.

Use a high pressure air lance or hot air lance to thoroughly clean and dry sawcut joints of dust, dirt, foreign material, sand and any other extraneous materials immediately prior to sealing joints. Do not burn, scorch or ignite the adjoining pavement when using a hot air lance. Install suitable traps or devices on the compressed air equipment to prevent moisture and oil from contaminating the joint crack surfaces. Maintain these devices and see that they are functioning properly. Protect the public from potentially objectionable and/or hazardous airborne debris.

Bond Breaking. Place bond breaker tape in the bottom of the sawcut joint after it is cleaned and dried.

Sealant Melting. Heat and melt the sealant in a melter constructed either as a double boiler filled with a heat-transfer medium between the inner and outer shells, or with internal tubes or coils carrying the sealant through a heated oil bath and into a heated double wall hopper. The melter will be equipped with separate thermometers to indicate the temperature of the heat transfer medium and the sealant material, positive temperature controls and with a mechanical agitator or a recirculating pump to assure a homogeneous blend of the sealant. Maintain the sealant at the pouring temperature ±10° F indicated on the material packaging. Check the discharge temperature of the sealant with a non-contact infrared thermometer. Discharge the sealant at a temperature between the manufacturer's recommended pouring and safe heating temperatures indicated on the material packaging. Submit an alternate method for measuring the discharge temperature to the Engineer for approval if desired.

Sealing is not permitted if the melter and discharge temperatures do not meet the requirements described above. Equip the discharge hose with a thermostatically controlled heating apparatus or insulate it to maintain the proper sealant pouring temperature. Holster the discharge hose to the melter if it is not thermostatically heat controlled. Circulate the sealant from the discharge hose and the melter to maintain the proper sealant pouring temperature.

Do not use sealant material heated beyond the safe heating temperature.

If the manufacturer's recommendations allow the sealant to be reheated or heated in excess of six hours, recharge the melter with fresh material amounting to at least 20 percent of the volume of the material remaining in the melter.

Sealing. Sealing is to be done when ambient air temperature is at or above 40° F

Seal the joint by placing the applicator wand in the recess and carefully discharge the sealant. Strike-off the sealant flush with the pavement surface using a squeegee or sealing shoe pressed firmly against the pavement. The level of the sealer will not be greater than 1/8 inch below the pavement surface after the sealant has cooled. If the sealant sinks into the joint more than 1/8 inch below the pavement surface, clean it with high pressure air and fill it to 1/8 inch below the pavement surface. Properly sealed joints shall be watertight and present a neat fine line.

Do not allow traffic on the sealed joint until the sealant has cured so as not to track. Use a low pressure, light spray of water to accelerate cooling of the sealant. Blotting the sealant with fine aggregate is not allowed.

Remove and dispose sealant in excess of the amount depicted in the contract details or that has not bonded to both sides of the reservoir. Clean sealed joints damaged from traffic with high pressure air and reseal them to meet the specified amount at no additional cost to the City.

MEASUREMENT AND PAYMENT.
Sawcutting and Sealing of Hot Mix Asphalt Pavement will be measured and paid for at the Contract unit price per linear foot of the transverse joint. The payment will be full compensation for all material, labor, equipment, tools, and incidentals necessary to complete the work.

Sawcuts made in the asphalt base course for the purpose of facilitating and controlling reflective cracking prior to placement of the asphalt surface course shall not be measured but will be considered incidental to the Contract unit price for Sawcutting and Sealing of Hot Mix Asphalt Pavement.

CATEGORY 500
PAVING

SECTION 520 — PLAIN AND REINFORCED PORTLAND CEMENT CONCRETE PAVEMENTS

520.02 MATERIALS.

ADD: The following after the second paragraph.

All dowels used for load transfer devices shall be bar size #10 (1.270" diameter).

520.03 CONSTRUCTION.

506 **ADD:** The following after 520.03.16.

520.03.17 Dowel Bar Placement Checks. After the placement of the PCC pavement is complete and cured, the alignment and placement of the dowel bars will be checked by the Administration using a non-destructive test method. A random representative sample of joints will be tested to determine conformance with the following:

(a) **Vertical Skew.** The vertical skew shall be no greater than 1/2 in. tolerance over a 12 in. length of dowel bar.

(b) **Horizontal Skew.** The horizontal skew shall be no greater than 1/2 in. tolerance over a 12 in. length of dowel bar.

(c) **Depth of Dowel Bar.** The dowel bar shall be located within the middle third of the slab thickness.

(d) **Joint.** The joint saw cut shall be in the middle third of the dowel bar length.

When a dowel bar is tested and does not conform to all of the above, it is then in non-conformance or misaligned. After testing is complete, the percentage of those dowel bars not meeting the above will be determined. Deficiency will be subject to a reduced payment as specified in 520.04. This is in addition to the reduced pay for slab thickness.

520.04 MEASUREMENT AND PAYMENT.

506 **ADD:** The following after 520.04.01.

520.04.02 Dowel Bar Misalignment Price Adjustment. Payment for the percentage of dowel bars accepted at a reduced price for not conforming to the proper alignment will be adjusted by the factors shown in the following table. Alignment is determined by

procedures specified in 520.03.17. This shall be a reduced price for the portland cement concrete pavement item in addition to any reduction due to pavement thickness.

DOWEL BAR PRICE ADJUSTMENT	
Percent of Misaligned Dowel Bars *	**Percent of Payment, Contract Unit Price ****
0.0 to 30.0	100
30.1 to 40.0	90
40.1 to 50.0	80
Greater than 50.0	Corrective action or pay reduction as determined by the Engineer

*This is the percentage of all dowel bars tested.
**This price adjustment is to the PCC price and not for the dowel bars. This is in addition to any price adjustment for pavement thickness.

CATEGORY 500
PAVING

SECTION 553 — LEAD FREE REFLECTIVE THERMOPLASTIC PAVEMENT MARKINGS

553.01 DESCRIPTION. Prepare and apply lead free reflective thermoplastic pavement markings to roadway surfaces as specified in the Contract Documents or as directed by the Engineer.

553.02 MATERIALS.

Lead Free Reflective Thermoplastic Pavement Markings	951.02

553.03 CONSTRUCTION.

553.03.01 Quality Assurance/Quality Control. Refer to 549.03.01.

553.03.02 Application Equipment. An oil or air jacketed kettle shall be utilized for uniform melting and heating of the thermoplastic material. The kettle shall provide continuous mixing and agitation of the material. The kettle and the applicator shall be equipped with an automatic thermostatic device to provide positive temperature control.

The equipment shall be constructed so that all mixing and conveying parts, up to and including the application apparatus, maintains the material at the specified temperature. Conveying parts of the applicator between the reservoir and the application apparatus shall be constructed to prevent clogging and accumulation. The applicator shall be capable of containing a minimum of 600 lb of molten thermoplastic material.

The kettle and applicator shall be constructed and arranged to conform to the requirements of the National Board of Fire Underwriters (NBFU), the National Fire Protection Association (NFPA), and State and local authorities.

Temperature gauges shall be calibrated every six months and a copy of the calibration certification shall be submitted to the Engineer.

The applicator shall apply the surface dressing beads to the molten thermoplastic marking by means of a pressurized bead dispenser or other mechanical conveying method not dependent upon gravity for uniform application. The bead dispenser shall be equipped with an automatic cutoff system that will stop the flow of the thermoplastic material whenever there is a disruption in the application of the beads so that all markings placed shall be covered with a uniform layer of surface dressing beads.

Application equipment shall be capable of applying the markings at multiple width settings ranging from 4 to 12 in. as specified in the Contract Documents.

The applicator shall provide a method for cleanly cutting off stripe ends and shall be capable of applying all longitudinal pavement markings.

The equipment shall be mobile and maneuverable to the extent that straight lines can be followed and all standard curves can be made in true arcs.

All parts of the equipment shall be thoroughly cleaned of foreign material or different colored material prior to the introduction of a new batch of thermoplastic material.

553.03.03 Cleaning Pavement Surfaces. Refer to 549.03.02.

553.03.04 Application. The ambient and surface temperatures shall be at least 50 F and rising at the time of application.

Thermoplastic pavement markings shall be sprayed onto the pavement surface. Only the spray method of application shall be permitted. Gore areas, crosswalks, small intersections, roundabouts, and other areas which preclude the application of the markings with truck mounted equipment will be exempt from the spray application requirement.

Thermoplastic pavement markings shall conform to the following:

(a) Temperature. The molten material temperature shall be between 400 and 440 F unless otherwise recommended by the manufacturer, and approved by the Engineer.

(b) Primer. A primer shall be used if thermoplastic is applied to portland cement concrete. Any primer used shall be compatible with the thermoplastic material.

(c) Thickness. The pavement markings shall yield a solid thickness range of 80 to 95 mils above the roadway surface across the middle two-thirds of the line width when tested as specified in MSMT 729. Variation from this range will be used for the price adjustment specified in 553.04.01.

(d) Glass Beads. Glass beads shall be uniformly applied to the surface of the molten thermoplastic at the minimum rate of 7 to 9 lb/100 ft^2, as specified in MSMT 729.

(e) Color. The color of the dry markings shall match Federal Standard 595 (13538 - yellow or 17886 - white). The Contractor shall supply the specified color chips for the Engineer's use to visually determine that the thermoplastic material matches the specified color.

(f) Retroreflectance. Refer to 549.03.03(h). The millicandellas/lux/square meter values taken anytime within the first 30 days shall conform to the following:

RETROREFLECTANCE

COLOR	RETROREFLECTIVITY	CORRECTIVE ACTION
White	equal to or greater than 250	None
Yellow	equal to or greater than 150	
White	less than 250	Necessary corrective actions, including grinding if necessary, and re-tracing
Yellow	less than 150	

(g) Width. Refer to 549.03.03(e).

(h) Alignment. Refer to 549.03.03(f).

(i) Layout Markings. Refer to 549.03.03(i).

553.03.05 Quality Control Test Strip. Refer to 549.03.04.

553.03.06 Responsibility. Refer to Section 549.

553.03.07 Observation Period. Refer to Section 549.

553.04 MEASUREMENT AND PAYMENT. Refer to 549.04. The reflectometer will become the property of the Contractor at the completion of the project.

553.04.01 Price Adjustment for Film Thickness. The unit price for Lead Free Reflective Thermoplastic Pavement Markings will be per striped linear foot based on MSMT 729 calculations for thickness, and will be adjusted in conformance with the following:

MIL THICKNESS	PERCENT OF PAYMENT - UNIT PRICE
80 – 95 (a)(b)	100
75 – 79	90
70 – 74	88
65 – 69	82
60 – 64	72
Less than 60	Retrace to achieve a thickness of 80 to 95 mils. Retrace thickness shall be 30 mils min (b).

(a) The Engineer may require the Contractor to remove excess material thickness.
(b) Removal of excess material and retracing pavement markings shall be performed at no additional cost to the Administration.

CATEGORY 500 PAVING

SECTION 556 — PREFORMED THERMOPLASTIC PAVEMENT MARKINGS

556.01 DESCRIPTION. This work shall consist of furnishing and installing heat applied preformed thermoplastic pavement marking symbols, legends, and lines as specified in the Contract Documents or as directed by the Engineer.

556.02 MATERIALS.

Preformed Thermoplastic is a durable pavement marking material. All Preformed Thermoplastic Pavement Marking material shall be selected from the Qualified Products List.

Heat Applied Permanent Preformed Thermoplastic Pavement Marking Material	951.06

556.03 CONSTRUCTION.

556.03.01 Quality Assurance/Quality Control. Refer to 549.

556.03.02 Application. The location, width, and type of marking, shall be as specified in the Contract Documents or as directed by the Engineer.

Applying pavement markings over longitudinal joints is prohibited; they shall preferably be offset 2 in. from them.

Thermoplastic Pavement Marking shall conform to the following:

(a) Temperature. The markings shall be applied when the thermoplastic, ambient, and surface temperature, and relative humidity conform to the manufacturer's recommendations.

(b) Color. The color of the dry markings shall match Federal Standard 595 (13538 - yellow or 17886 - white). The Contractor shall supply the specified color chips for the Engineer's use to visually determine that the thermoplastic material matches the specified color.

(c) Primer. When specified by the manufacturer, a primer shall be used if thermoplastic is applied to Portland cement concrete.

(d) Retroreflectance. The minimum retroreflectance shall be 150 millicandelas/lux/square meter for yellow and 250 millicandelas/lux/square meter for white as determined in conformance with 549.03.

556.03.05 Packaging. The material shall be handled for shipping, unloading and storage as recommended by the manufacturer. Each shipping package shall be marked with the following information:

(a) Manufacturer's name.

(b) Description of item.

(c) Date of manufacture.

(d) Contractor's name.

(e) Purchase order number.

(f) Lot number.

(g) Color.

556.04 MEASUREMENT AND PAYMENT. The payment will be full compensation for all pavement preparation, furnishing and placing of markings, testing, and for all material, labor, equipment, tools, and incidentals necessary to complete the work.

Preformed Thermoplastic Pavement Marking Legends (letters and numbers) and Symbols will be measured and paid for at the Contract unit price per square foot. The square foot pay quantity for Legends (letters and numbers) and Symbols will be as specified in the Administrations Standard Details

Preformed Thermoplastic Pavement Marking lines will be measured and paid for at the Contract unit price per linear foot for the color and width specified.

CATEGORY 600
SHOULDERS

DETECTABLE WARNING SURFACE

DESCRIPTION. Furnishing and install detectable warning surfaces as specified in the Contract Documents or as directed by the Engineer.

The detectable warning surface shall conform to the most recent accessibility guidelines of the Americans with Disabilities Act (ADA) under Section R304 of the Public Rights-of-Way guidelines.

This work also includes the removal and disposal of the existing sidewalk or other materials necessary for the construction and installation of the detectable warning surfaces.

Detectable warning surfaces are required at street crossings, signalized intersections and wherever sidewalk ramps are installed.

MATERIALS.

Detectable Warning Surfaces	925

A. General: As per Section 925 of the Special Provisions and as follows:

Size: The surface standard size shall be a minimum of 24" wide in the direction of pedestrian travel and extend the full width of the curb ramp landing. The detectable warning surface shall not encroach on the blended transition areas.

B. Use Type III Brick Pavers as per Section 925 of the Special Provisions. Brick pavers shall conform to C67 - Standard Test Methods for freeze and thaw.

C. Bituminous Setting Bed: Bituminous concrete to be used shall conform to 904.02. The fine aggregate to be used shall conform to 904.04. The dried fine aggregate shall be combined with hot asphalt cement and the mix shall be heated to approximately 300 degrees F at an asphalt plant. The approximate proportion of materials shall be 7 percent cement asphalt and 93% fine aggregate. The Contractor shall determine the exact proportions of materials to produce the best possible mixture for construction of the bituminous setting bed to meet construction requirements.

D. Neoprene Modified Asphalt Adhesive: Adhesive shall consist of 2 percent neoprene (Grade WM1) oxidized asphalt with a 155 degree F softening point (80 percent penetration) and 10 percent asbestos free fibers.

E. Sand: The sand shall be zero sand.

F. Tack Coat: Tack coat shall conform to 904.03.

G. Concrete Slab: Concrete slab shall be Concrete-Mix No. 2 (3000 lb. per sq. in.) in accordance with 902.

H. Expansion Joint Material:

(a) Preformed Expansion Joint Material - Use the bituminous type which meets the requirements of AASHTO Designation M 213 with the exception of the weathering test. All joint material shall be one-quarter inch (1/4 in.) thick.

CONSTRUCTION

3.1 General

The Contractor shall install the system in conformance with the manufacturer's recommendation. These recommendations shall address the conditions of the concrete surface on which the system will be applied; surface finish, presence of curing compound, length of cure, and other installation practices to ensure the longevity of the detectable warning surfaces.

The detectable warning surface shall be located so that the edge nearest the curb line is 6" – 8" from the face of curb. For skewed applications, detectable warning surfaces shall be placed such that the domes closest to the back of curb are no less than 0.5" and no more than 1" from the back of curb. Truncated dome surfaces shall be fabricated to provide full domes only.

3.2 Installation Procedures:

Storage, and Handling. Store, handling and protect products. Store in a protected and dry area.

Examine Detectable Pavers upon setting and any units damaged will be subject to rejection. The Engineer shall inspect the Detectable Pavers to assure that all items are completely clean and not damaged. All Detectable Pavers shall be free of foreign matter before installation.

Setting Detectable Pavers:

(a) Examine surfaces to receive paving, with Installer present, for compliance with requirements for installation tolerances and other conditions affecting performance of Detectable Pavers. Do not proceed with installation until any unsatisfactory conditions have been corrected.

(b) Vacuum clean concrete substrates to remove dirt, dust, debris, and loose particles.

(c) Bituminous material for tack coat shall be provided between the concrete foundation slab and the bituminous setting bed. The tack coat shall completely cover the concrete foundation slab.

(d) Over the concrete foundation, install the bituminous setting bed by placing ¾ in. deep control bars directly on the deck. If grades must be adjusted, set wood chocks under the depth control bars to the proper grade. Set two (2) bars parallel to each other

approximately eleven (11) feet apart to serve as guides for the striking board. The depth control bars must be set carefully to bring the pavers, when laid, to proper grade.

(e) Place the bituminous bed between the parallel depth control bars. Pull this bed with the striking board over these bars several times. After each passage, low porous spots must be showered with fresh bituminous material to produce a smooth, firm and even setting bed. As soon as this initial panel is completed, advance the first bar to the next position in readiness for striking the next panel. Carefully fill up any depressions that remain after removing the depth control bars and wood chocks.

(f) The setting bed shall be hand tamped while hot to a nominal depth ¾ in.

(g) The elevation shall be adjusted so that when the pavers are placed, the top surface of the pavers will be at the required finished grade.

(h) A coating of 2 percent neoprene modified asphalt adhesive shall be applied by mopping or squeegeeing or troweling over the top surface of the bituminous setting bed so as to provide a bond under the Detectable Pavers. If it is troweled, the trowel shall be serrated with serrations not to exceed 1/16 inch. When the modified asphalt adhesive is dry to the touch, carefully place the pavers by hand in straight courses with hand tight joints and uniform top surface.

(i) Installation of the Detectable Pavers shall start from the corner or straight edge and proceed forward over the undisturbed leveling course. Detectable Pavers shall be installed in the pattern indicated on the details in this Contract Book. The pavers shall be installed hand-tight with joints not exceeding ¼", including the joints with the curbs. All cut pavers shall be a minimum of one-quarter (¼) paver in size unless approved by the Engineer. Detectable Pavers shall be cut with an approved cutter to fit accurately, neatly, and without damaged edges, and shall be straight and perpendicular to the surface. Cuts should be made with a blade consisting of the proper bond matrix operated at the proper blade speed as recommended by the manufacturer. All whole and cut block edges shall be free of chips, spalls, or cracks. Edge pavers shall be used wherever possible at edges. String lines shall be used to hold pattern lines true. Sand shall be swept into the joints and pavers compacted again until the joints are filled. The finished surface shall not deviate more than 3/8" using a 10' long straightedge.

Weather. Stockpiles of materials shall be covered each day after construction and during each precipitation event so that the maximum moisture content is not exceeded at any time.

Leveling course materials and brick pavers shall not be installed during rain or snowfall conditions or upon frozen substrate.

Cleaning. Detectable Pavers shall be cleaned after installation per the manufacturer's instructions as required or as directed by the Engineer. Do not use muriatic acid.

MEASUREMENT AND PAYMENT Detectable Warning Surface Clay Brick Paver will be measured and paid for at the Contract unit price per square foot, complete and installed. The payment will be full compensation for the furnishing, installation and for all material, labor, equipment, tools and incidentals necessary to complete the work.

The sidewalk on which the detectable warning surface is complete and installed will be measured and paid for at the Contract price for the pertinent Sidewalk item.

CATEGORY 600
SHOULDERS

SECTION 600 — DOUBLE SWING GATE

DESCRIPTION. Furnish and install Double Swing Gate as indicated in the Contract Drawings or as directed by the Engineer.

MATERIALS.

Gate:	Schedule 40 galvanized steel pipe and hardware	
Paint:	Polyurethane Gloss Black	
Concrete Mix No. 2		902.10
Reflectors		

CONSTRUCTION. Gate opening shall be 30 feet wide. Furnish pair of gates with sliding cane bolt and padlock hasp at posts. Provide concrete footings with all required anchor bolts and reinforcing as recommended by gate manufacturer. At each gate, furnish and install two 3" diameter pipes, 6" higher than gate for securing gate in open position and for limiting swing of gate. Extend pipes 3'-0" into ground and install 3' x 18" diameter concrete footings. Fill pipes with concrete and cove top for drainage. Provide padlock hasps which permit locking gates in open position on each side. Coordinate hasp locations and configuration with gates. Reflectors shall be bolted to front and back and both sides of gate.

MEASUREMENT AND PAYMENT. Double Swing Gate will be measured and paid for at the Contract unit price per each. The payment will be full compensation for all material, labor, equipment, tools, and incidentals necessary to complete the work.

Removal of the existing single swing gate shall be incidental to Double Swing Gate.

CATEGORY 600
SHOULDERS

SECTION 602 — CURB, COMBINATION CURB AND GUTTER, AND MONOLITHIC MEDIAN

602.04 MEASUREMENT AND PAYMENT.

ADD: The following after the third paragraph.

Full depth pavement saw cutting required for the removal of the existing curb & gutter outside the limits of Class 1 Excavation shall be incidental to item "Std. Type A Comb Curb And Gutter 12 Inch Gutter 6 Inch Rise"

Expansion material and joint sealer placed between the back of Concrete Curb 5" Depth, 6" Width, 3" to 6" Rise and face of building shall be considered incidental to cost of the curb.

CATEGORY 600
SHOULDERS

SECTION 603 — SIDEWALKS

603.03.01 CONSTRUCTION.

ADD: After section (g):

(h) After removal of the existing sidewalk, the frames of the existing manholes, valve boxes, and other utility and drainage structures shall be adjusted to the final grade using brick masonry and mortar. Wood blocks or pegs will not be permitted.

For any structures that are broken and need replacement, the Contractor shall furnish and deliver the new manhole frames and covers, new valve boxes, and new hand box frames and covers from the appropriate vendor to the project site.

603.04 MEASUREMENT AND PAYMENT.

ADD: After last paragraph:

Adjustments of existing utility and drainage structures located in the sidewalk area to final grade will not be measured but the cost will be considered incidental to the sidewalk item.

Furnished frames and covers shall be measured and paid under the pertinent Furnish Frame and Cover items.

All saw cutting required for the removal of the existing sidewalk outside the limits of Class 1 Excavation shall be incidental to item "5 Inch Thick Concrete Sidewalk Broom Finish".

CATEGORY 600
SHOULDERS

BENCHES

DESCRIPTION. This work shall consist of the procurement, finish, and installation of benches at the locations designated on the Plans and all necessary material, labor, incidentals, tools and equipment to complete this work. Benches shall be installed in accordance with the Standard Specifications, the Plans, these Special Provisions and as directed by the Engineer.

MATERIALS. Benches shall match in quantity, fabrication and style those shown on the Plans and as follows:

Benches. Benches shall be a minimum of 6' long and fabricated of cast metal powder coated gloss black with wood slats and steel cross supports. Benches shall be anchored to pavement with galvanized steel anchor bolts at the locations shown on the Contract Drawings. **All benches must be furnished with center arm rests**. Benches shall be provided by one of the following manufacturers:

(a) Flat Bay bench, 73 ¼" length, 22" width, 17" height. Aluminum casting, powder coated, Anchor bolt mounting. Wood V.G. fir with #718 Olympic Stain. As manufactured by Urban Accessories, 20004 144th Avenue, N.E., Woodinville, WA 98072, phone: 206-487-0488
When contacting Urban Accessories, the Contractor shall indicate the benches are to be used for the Downtown Partnership of Baltimore Central Avenue Project.

(b) TimberForm Restoration bench, model 2119-7. 7'-0" length, 27" width, 2'-10" height, 1'-4" seat height. Powder-coated cast iron frame. Surface mounting. Marine teak wood slats. As manufactured by Columbia Cascade, 1975 S.W. Fifth Avenue, Portland, Oregon 97210-5293, phone: 503-223-1157.

(c) Classic Series bench, standard 6' length, model C-138. 20" width, 17-1/2" seat height, 31-7/8" overall height. Ductile iron castings, electrostatically powder-coated with IGIC polyester powder coating. ½" I.D. anchor bolt holes. Ipe wood slats. As manufactured by Victor Stanley, Inc., P.O. Drawer 330, Dunkirk, MD 20754, phone: 301-855-8300.

Or approved equal by the Engineer.

Submittals. The Contractor shall supply the following submittals for approval by the Engineer:

(a) Shop Drawings: Submit complete shop drawings of the bench as specified. Drawings shall include overall dimensions, sizes, materials, accessory details, methods of assembly, hardware data, and milling details of the items specified. Include elevations, details of sections and connections, methods of construction and assembly, type, gage and finish of

metals or other materials. Include anchorage and accessory items and integration details of related work.

(b) Samples: Submit samples of type and finish color of the bench specified.

(c) Qualification Data: Submit installer qualifications verifying years of experience; include list of completed projects having similar scope of work identified by name, locations, date, reference names and phone numbers.

CONSTRUCTION.

Benches. The Contractor shall anchor each bench to the pavement set level and plumb. Refer to the manufacturer's specifications.

Delivery, Storage, and Handling - The Contractor shall be responsible to deliver, store, handle and protect products in accordance with manufacturer's instruction. The Contractor shall store products in a protected and secure area in manufacturer's protective shipping crates or packaging.

The Contractor shall examine the contents of all packages delivered to the site immediately upon delivery and any units damaged during shipping will be rejected. The Contractor shall inspect the shipment to assure that all items are complete.

MEASUREMENT AND PAYMENT. Benches will be measured and paid for at the Contract unit price per each, complete and installed. The payment shall be full compensation for bench, finish, anchoring devices and for all materials, equipment, labor, tools, and incidentals necessary to complete the work.

CATEGORY 600
SHOULDERS

LITTER RECEPTACLES

DESCRIPTION. This work shall consist of the procurement, finish, and installation of litter receptacles at the locations designated on the Plans and all necessary material, labor, incidentals, tools and equipment required to complete this work. Litter Receptacles shall be installed in accordance with the Standard Specifications, the Plans, these Special Provisions and as directed by the Engineer.

MATERIALS. When contacting the manufacturer, the Contractor shall indicate the litter receptacles are to be used for the Downtown Partnership of Baltimore Central Avenue Project.

Litter receptacles shall match in quantity those shown on the Plans and as follows:

Litter Receptacles. Litter receptacles shall be all steel powder coated gloss black with black liners. Receptacles shall be installed as detailed in the contract documents. Bolts and anchors shall be galvanized as per ASTM 153 and conform to ASTM 709, Grade 36 and shall be provided by the contractor. Litter Receptacles shall be provided by one of the following manufacturers:

(a) Bethesda Series Ironsites litter container, standard spun steel lid, model S-35. 25" diameter, 32 ¼"height, adjustable glides and center anchor bolt mounting. Electrostatically powder-coated with IGIC polyester powder coating. 24-gallon capacity high density plastic liner. As manufactured by Victor Stanley, Inc., P.O. Drawer 330, Dunkirk, MD 20754, phone: 301-855-0300.

(b) TimberForm Renaissance litter container, open top style, model 2811-FT-P. 2'-2" diameter, 2'10" height, pedestal mounting. Powder coated steel. Matching powder- coated 23-gallon steel liner and top. Key-locking top. As manufactured by Columbia Cascade, 1975 S.W. Fifth Avenue, Portland, Oregon 97201-5293, phone: 503-223-1157.

(c) Bowery Trash Receptacle, spun top cover. 28 ½" outer diameter, 39 ½" height, with 4 mounting tabs 5/8" holes (4 pcs.) Standard black powder coat finish. Permanent metal liner with matching finish. As manufactured by Canterbury International, 5632 West Washington Blvd., Los Angeles, CA 90016, phone: 800-935-7111.

Or approved equal by the Engineer.

Submittals - The Contractor shall supply the following submittals for approval by the Engineer:

(a) Shop Drawings: Submit complete shop drawings of the litter receptacle as specified. Drawings shall include overall dimensions, sizes, materials, and accessory details, methods of assembly, hardware data, and milling details of the items specified. Include elevations,

details of sections and connections, methods of construction and assembly, type, gage and finish of metals or other materials. Include anchorage and accessory items and integration details of related work.

(b) **Samples**. Submit samples of type and finish color of the litter receptacle specified.

(c) **Qualification Data.** Submit installer qualifications verifying years of experience; include list of completed projects having similar scope of work identified by name, locations, date, reference names and phone numbers.

Delivery, Storage, and Handling. The Contractor shall be responsible to Deliver, store, handle and protect products in accordance with manufacturer's instruction. The Contractor shall store products in a protected and secure area in manufacturer's protective shipping crates or packaging.

The Contractor shall examine the contents of all packages delivered to the site immediately upon delivery and any units damaged during shipping will be rejected. The Contractor shall inspect the shipment to assure that all items are complete.

CONSTRUCTION.

Litter Receptacles. Litter receptacles shall be surface mounted using stainless steel, vandal resistant in-ground mounting hardware. The Contractor shall refer to the manufacturer's specifications.

MEASUREMENT AND PAYMENT. Litter Receptacle will be measured on a per each basis, complete and installed. The payment shall be full compensation for litter receptacle, finish, anchoring devices, labor and materials, equipment and incidentals necessary to complete the work.

CATEGORY 600
SHOULDERS

NEWSPAPER CORRAL

DESCRIPTION. This work shall consist of furnishing and constructing a steel newspaper corral and shall consist of the procurement, finish, and installation of the steel newspaper corral at the location designated on the Plans and all necessary material, labor, incidentals, tools and equipment to complete this work. "Newspaper corral" shall be installed in accordance with the Plans, these Special Provisions and as directed by the Engineer.

MATERIALS.

Newspaper corral shall match in quantity, fabrication and style that shown on the Plans and as follows:

Newspaper Corral. Newspaper corral shall be 7' 5" length, 1' 8-1/2" width, posts 3' 7-1/2" height, and a top rail set at 2' 9-1/4" height as shown on the detail drawings. Newspaper corral shall be constructed of steel and shall be powder coated gloss black. All sides and edges of steel components shall be ground smooth, free of burs or sharp edges, and shall be powder coated to prevent rusting. Newspaper corral shall be anchored to pavement with stainless steel concrete wedge anchors at the locations shown on the Contract Drawings.

Submittals. Submit product data and test reports for materials other than water and aggregates.

(a) **Shop Drawings.** Submit complete shop drawings of the newspaper corral. Drawings shall include overall dimensions, sizes, materials, accessory details, methods of assembly, hardware data, and milling details of the items specified. Include elevations, details of sections and connections, methods of construction and assembly, type, gage and finish of metals or other materials. Include anchorage and accessory items and integration details of related work.

(b) **Samples.** Submit a 6" sample length of the type and finish color of the newspaper corral specified.

(c) **Qualification Data.** Submit installer qualifications verifying years of experience; include list of completed projects having similar scope of work identified by name, locations, date, reference names and phone numbers.

Quality Assurance.

(a) **Mockups.** Build mockups to verify selections made under Sample submittals and to demonstrate aesthetic effects and set quality standards for materials and execution. Approved mockups may become part of the completed Work if undisturbed at time of Substantial Completion.

Delivery, Storage, and Handling. The Contractor shall be responsible to Deliver, store, handle and protect products in accordance with manufacturer's instruction. The Contractor shall store products in a protected and secure area in manufacturer's protective shipping crates or packaging.

The Contractor shall examine the contents of all packages delivered to the site immediately upon delivery and any units damaged during shipping will be rejected. The Contractor shall inspect the shipment to assure that all items are complete.

CONSTRUCTION.

The Contactor shall ensure that the pavement base is suitable for proceeding with installation of the newspaper corral.

The Contractor shall anchor the posts of the newspaper corral to pavement using 3/8" x 3" stainless steel concrete wedge anchors. Posts shall be set level and plumb.

The Contractor shall install all components as shown on the approved shop drawings using vandal resistant stainless steel fasteners. The Contractor shall ensure that after installation all surfaces are clean and free of scratches or abrasions that would deter from the finished appearance or affect the performance of the newspaper corral.

MEASUREMENT AND PAYMENT. Newspaper corral will be measured and paid for at the Contract unit price per each, complete and installed. The payment shall be full compensation for the procurement and installation of newspaper corral, finish, anchoring devices and for all materials, equipment, labor, tools, and incidentals necessary to complete the work.

CATEGORY 600
SHOULDERS

BIKE RACKS

DESCRIPTION. The work shall consist of the procurement, finish, and installation of bike racks at the locations designated on the Plans and all necessary material, labor, incidentals, tools and equipment to complete this work. Bike racks shall be installed in accordance with the Standard Specifications, the Plans, and these Special Provisions and as directed by the Engineer.

MATERIALS. Bike racks shall match in quantity, fabrication and style those shown on the Plans and as follows:

Bike Racks. Bike racks shall be a five "loop" design to accommodate up to seven bikes each, in-ground mounted, steel construction, powder coated gloss black, and shall be provided by one of the following manufacturers:

(a) Highland Wave™ heavy duty bike racks, powder-coated Gloss Black, constructed of 2-3/8" O.C. tubular schedule 40 steel pipe, as manufactured by Highland Products Group LLC, 3350 NW Boca Raton Boulevard, Suite B2, Boca Raton, FL 33431, phone: 561-620-7878 or 888-447-2401

(b) TimberForm Cycloops™ bike racks, model 2170-7-C, powder-coated Gloss Black, constructed of 2-3/8" O.C. schedule 40 tubular steel pipe, as manufactured by Columbia Cascade, 1975 S.W. Fifth Avenue, Portland, Oregon 97210-5293, phone: 503-223-1157.

(c) Cycle Sentry™ Series bike racks, model BRCS-105, powder-coated Gloss Black constructed of 2-3/8" O.C. tubular steel pipe as manufactured by Secure Site Design™ LLC, and provided by Victor Stanley, Inc., P.O. Drawer 330, Dunkirk, MD 20754, phone: 301-855-8300.

Or approved equal by the Engineer.

Submittals. The Contractor shall supply the following submittals for approval by the Engineer:

(a) Shop Drawings: Submit complete shop drawings of the bike rack as specified. Drawings shall include overall dimensions, sizes, materials, accessory details, methods of assembly, hardware data, and milling details of the items specified. Include elevations, details of sections and connections, methods of construction and assembly, type, gage and finish of metals or other materials. Include anchorage and accessory items and integration details of related work.

(b) Samples: Submit samples of type and finish color of the rack specified.

(c) Qualification Data: Submit installer qualifications verifying years of experience; include list of completed projects having similar scope of work identified by name, locations, date, reference names and phone numbers.

Delivery, Storage, and Handling. The Contractor shall be responsible to Deliver, store, handle and protect products in accordance with manufacturer's instruction. The Contractor shall store products in a protected and secure area in manufacturer's protective shipping crates or packaging.

The Contractor shall examine the contents of all packages delivered to the site immediately upon delivery and any units damaged during shipping will be rejected. The Contractor shall inspect the shipment to assure that all items are complete.

CONSTRUCTION.

Bike Racks. The Contractor shall install each bike rack using stainless steel, vandal resistant in-ground anchor hardware and shall be set level and plumb to the manufacturer's specified heights. Refer to the manufacturer's specifications. Bike racks shall be installed on the concrete pavement surface where located on the plans.

MEASUREMENT AND PAYMENT. Bike Racks will be measured and paid for at the Contract unit price per each, complete and installed. The payment shall be full compensation for bike rack, finish, anchoring devices and for all materials, equipment, labor, tools, and incidentals necessary to complete the work.

CATEGORY 600
SHOULDERS

CLAY BRICK UNIT PAVERS

DESCRIPTION. This work shall consist of furnishing and installing clay brick unit pavers on a bituminous setting bed with sand filled joints, and aluminum and steel edge restraints in the locations and patterns specified on the plans and in accordance with these Special Provisions and as directed by the Engineer.

MATERIALS.

(a) Graded Aggregate Subbase. Graded aggregate subbase material shall be in accordance with Standard Specification Section 901.01, Type D 2940.

(b) Concrete Slab. Concrete slab shall be in accordance with Section 902.10.03 Mix No. 3.

(c) Bituminous Setting Bed. Dried fine aggregate shall be combined with hot asphalt cement and the mix shall be heated to approximately 300 degrees F at an asphalt plant. The approximate proportion of materials shall be 7 percent asphalt cement and 93 percent fine aggregate. The Contractor shall determine the exact proportions of materials to produce the best possible mixture for construction of the bituminous setting bed to meet construction requirements.

(d) Neoprene Modified Asphalt Adhesive. Adhesive shall consist of 2 percent neoprene (Grade WM1) oxidized asphalt with a 155 degree F softening point (80 percent penetration) and 10 percent asbestos free fibers.

(e) Tack Coat. The tack coat shall conform to AASHO Designation T 59.

(f) Joint Filler. Joint filler shall be sand in accordance with Standard Specification 901.01, Type M45 Mortar Sand. The moisture content of the leveling course material and joint filler shall not exceed 12 percent. Stock piles shall be covered each day after construction and during each precipitation event so that this moisture content is not exceeded at any time. The joint filler shall be free of contaminants which would cause efflorescence or staining.

(g) Clay Brick Pavers. Provide solid clay brick unit pavers without frogs or cores in surfaces exposed to view of the completed work. Clay brick pavers shall meet or exceed ASTM C-902, Class SX, Application PX, Type 1, and C-67 for freeze/thaw, for Pedestrian and Light Paving Bricks.

Clay Brick unit pavers submitted for Orleans Street between station 20+10(+/-) and station 21+90(+/-) must match Clay Brick unit pavers submitted for Contract TR00045 (Orleans St. Contract).

1. Manufactures: Subject to compliance with these specifications, available manufacturers that may supply Clay Brick unit pavers include the following, or approved equal by the Landscape Architect:

   a. **Pine Hall Brick**, as distributed by Belair Road Supply, 7750 Pulaski Highway, Baltimore, MD 21237, (410) 687-4200
      1. Thickness: 2-1/4 in.
      2. Face Width: 4 in.
      3. Face Length: 8 in.
      4. Color: 'Pathway Full Range'
      5. Texture: Square edge

   b. **Whitacre Greer**, 1400 S. Mahoning Ave., Alliance Ohio 44601 as distributed by Belair Road Supply, 7750 Pulaski Highway, Baltimore, MD 21237, (410) 687-4200
      1. Thickness: 2-1/4 in.
      2. Face Width: 4 in.
      3. Face Length: 8 in.
      4. Color: Blend of:
         a. 40% #42 Cinnamon
         b. 35% #43 Tangerine
         c. 25% #44 Mahogany
      5. Texture: Straight Edge Texture with Lugs

   c. **Watsontown Brick**, PO Box 68, Route 405 • Watsontown, Pennsylvania 17777-0068, (800) 538-2040, (570) 538-2555
      1. Thickness: 2-1/4 in.
      2. Face Width: 4 in.
      3. Face Lengths: 8 in.
      4. Color: Garden Blend
      5. Texture: Square edge

(e) Expansion Joint Material and Sealant. Preformed Expansion Joint Material shall be the bituminous type which meets the requirements of AASHO Designation M 213 with the exception of the weathering test. All joint material shall be ¼ in. thick except at walls, curbs and other adjacent surfaces, where joints shall be ½ in. thick.

(f) Joint Sealant. Joint Sealant for expansion joints shall be a two component polyurethane caulk. Sealant color shall match adjacent paver joints.

(g) Steel Edge Restraint – Central Avenue. Steel Edge restraints shall be 3/16 in. thickness, by 4 in. height, black or brown powder-coated, and shall include stakes to attach to anchor edging as shown on the Detail Plans.

(h) Aluminum Edge Restraint – Orleans Street Only (Approx. Stations 20+10 to 21+90). L-shaped, 3/16-in. thick by 2-1/4 in. high extruded-aluminum edging. Finish shall be milled aluminum.

Submittals. Submit product data and test reports for materials other than water and aggregates.

(a) Samples for Initial Selection, for the following

1. A minimum of three (3) full size units of each type of clay brick unit paver specified showing full range of color selection.

Quality Assurance.

(a) Source Limitations. Obtain clay brick unit pavers from a single source with resources to provide quantity of materials and products of consistent quality in appearance and physical properties.

(b) Mockups. Build mockups to verify selections made under Sample submittals and to demonstrate aesthetic effects and set quality standards for materials and execution. Approved mockups may become part of the completed Work if undisturbed at time of Substantial Completion.

CONSTRUCTION.

General. Prior to sidewalk construction the Contractor shall coordinate with the City regarding the placement of parking meter posts and foundations.

The Contractor shall hold a pre-installation meeting prior to placing pavers. The pre-installation meeting will be held to coordinate the placement of the paver patterns. For the pre-installation meeting the Contractor shall construct a 5 ft x 5 ft sample panel of a typical section of walk, which shall include a full 1 ft - 4 in. wide segment of the brick band along two sides of the panel including a 90 degree corner treatment representing the quality of finish work of brick banding and concrete, for the entire project. The sample patterns shall remain until the corresponding pattern is in place and approved by the Engineer. The Contractor shall not place any pavers on setting bed until receiving written approval from the Engineer.

Concrete substrate shall be clean and free of stones, dirt or other debris prior to beginning work or placement of bituminous for setting bed.

The Contractor shall install preformed joint filler at locations shown. Extend filler from the bottom of concrete to below the finished surface as detailed.

The Contractor shall make splices in the filler in a manner to prevent penetration of concrete between joint faces.

The Contractor shall install aluminum and steel edge restraints where the paving units abut planting pits per the locations and methods shown on the Detail Drawings and where described in these Special Provisions.

The Contractor shall not use pavers with chips, frogs, cracks, voids, discolorations, and other defects which might be visible or cause staining in the finished work.
The Contractor shall use full pavers without cutting wherever possible. Where necessary, the Contractor shall cut pavers with motor driven saw equipment designed to cut masonry with

clean, sharp, un-chipped edges. Cut units as required to provide the pattern shown and to fit adjoining work neatly.

The Contractor shall set pavers in the patterns shown with 1/8 inch uniform joints to accept sand between joints

The Contractor shall maintain surface plane for finished paver floors not exceeding a tolerance of 1/8 inches in ten feet when tested with a ten-foot straightedge.

The Contractor shall use the paver face which matches the color of adjacent pavers to yield the tightest color range possible.

Bituminous Setting Bed. Bituminous setting bed shall have a 3/4" uniform thickness. The Contractor shall adjust the elevation of the setting bed so that when the pavers are placed, the top surface of the pavers will be at the required finished grade and flush with the adjacent concrete.

Control and Expansion Joints. The Contractor shall install control and expansion joints where pavers abut restraining surfaces such as walls, curbs, adjacent concrete paving, etc., and as shown on the Detail Plans.

Curb Joint Sealant. The Contractor shall prepare curb joints adjacent to the brick pavers as specified in Standard Specification 523.03.02. Joints shall be treated to prevent the leveling course from migrating through the joints using Roofing Paper, Joint Sealer, or similar material approved by the Engineer. The curb joint sealant shall be installed prior to installation of paver base and leveling course. Joints shall be filled with Joint Sealer so that excess sealer is pushed out at the top. The excess sealer shall be removed, leaving a clean, smooth surface.

Weather. The Contractor shall cover stockpiles of grout, mortar, and joint materials each day after construction and during each precipitation event so that the maximum moisture content is not exceeded at any time.

Setting bed materials and brick pavers shall not be installed during rain or snowfall or frozen substrate conditions.

Cleaning. The Contractor shall clean brick pavers after installation per the manufacturer's instructions as required or as directed by the Engineer. The Contractor shall not use muriatic acid.

MEASUREMENT AND PAYMENT. Clay Brick Unit Pavers will be measured and paid for at the Contract unit price per Square Foot of Clay Brick Unit Pavers installed and accepted. The payment for Item Clay Brick Unit Pavers as specified in the Contract Documents will be full compensation for all material, labor, equipment, tools, and incidentals necessary to complete the work including; bituminous setting bed, aluminum edge restraints (Orleans Street only), steel edge restraints (Central Avenue only), joint filler, concrete slab, graded aggregate subbase, control and expansion joints, and curb joint sealant.

CATEGORY 600
SHOULDERS

BELGIAN BLOCK PAVING
(ORLEANS STREET - APPROX. STATION 20+10 TO STATION 21+90)

DESCRIPTION.

This item of construction shall include, but is not limited to, the furnishing of all labor, materials, equipment, services for and incidentals to the installation of Belgian Block Paving supported on a sand or mortared setting bed, in the specified patterns with joints as indicated on the Contract Plans, and includes the graded aggregate base course. These items shall also consist of the construction of masonry work as required to place pavers adjacent to existing foundations which are to remain.

Work under this section also includes concrete base, sand setting bed, and weed barrier.

This item shall also consist of adjusting manholes and/or utility stacks to final grade, removing and resetting frames and covers, miscellaneous repairs such as replacing portions of concrete or brick, removing debris, minor grade adjustments, and other repairs as directed by the Engineer. This item covers all structures located behind the curb outside of roadway pavements. Structures located within the proposed roadway pavement shall be adjusted in accordance with other pertinent pay items.

MATERIALS.

Belgian Block Paving. Units sizes shall be approximately 4" x 5" x 10", shall be light gray, and shall be provided by one of the following:

(a) Coldspring Granite (800) 551-7502

(b) N. Carnevale's Landscape Materials, 529 Brunswick Pike, Lambertville, NJ 08530-2811, (609) 397-8870

(c) Progressive Brick Company, 190 Route 17 North, Hasbrouck Heights, NJ 07604, (201) 288-2121

Or approved equal by the Project Engineer.

Mortar for Belgian Block Paving. Mortar shall conform to Section 903.06. Mortar for exterior masonry work shall have an approved waterproofing admixture added (high-bond polymer additives or latex modified Portland cement).

Sand Setting Bed for Belgian Block Paving. The sand shall conform to Section 901.01 with no more than 5% passing the No. 100 sieve; 100% may pass the No. 30 sieve, but if the work requires coarser sand, the coarse sieve size limit may be increased to No. 16.

Graded Aggregate Subbase. Graded aggregate subbase material shall be in accordance with Standard Specification Section 901.01, Type D 2940.

Concrete Slab. Concrete slab shall be Concrete-Mix No. 2 (3000 lb. per sq. in.) in accordance with Section 902.10.

Expansion Joint Material and Sealant.

(a) Preformed Expansion Joint Material - Use the bituminous type which meets the requirements of AASHTO Designation M 213 with the exception of the weathering test. All joint material shall be one-quarter inch (1/4") thick except at walls and other adjacent surfaces, where joints shall be one-half inch (1/2") thick.

(b) Sealant - Sealant shall be a two component polyurethane caulk. Sealant color shall match adjacent concrete curbs.

1. Install preformed joint filler at locations shown. Extend filler from the bottom of concrete to below the finished surface as detailed.

2. Make splices in the filler in a manner to prevent penetration of concrete between joint faces.

3. Install in the form a water-soaked wood strip of the required dimensions for, after removal, a proper size slot to receive the sealant compound.

Expansion Joint Material will not be measured for payment but will be incidental to other pertinent items specified in the Contract Documents.

Weed Barrier. Weed Barrier shall be a pre-emergent weed control geotextile which contains trifluralin herbicide. The fabric shall be flexible and permeable. The herbicide shall have a time release mechanism which continues to meter trifluralin into the soil or sand as the exposed trifluralin biologically and chemically degrades. Weed barrier product shall be guaranteed to eliminate weed growth for a minimum of 10 years and shall be registered with the EPA. Weed barrier shall be installed only where Belgian block pavers are set on sand setting bed, and shall be placed between the soil and the sand setting bed as indicated on the Plans.

(a) Weed barrier shall meet the following:

Property	Typical Value	Test Method
Unit weight (oz/yd^2)	4.0	ASTM D 3776
Tensile strength (lbs)	145	ASTM D 4632
Elongation at break (%):	70 min	ASTM D 4632
Mullen Burst Strength (psi)	175	ASTM D 3786
Puncture Strength (lbs)	50	ASTM D 751 Mod.
Coefficient of permeability (cm./sec.)	3x10G^2	ASTM D 4491

CONSTRUCTION.

Prior to sidewalk construction the Contractor must coordinate with the City regarding the placement of parking meter posts and foundations, refer to the Special Conditions.

Prior to placing pavers, a pre-installation meeting shall be held. The pre-installation meeting will be held to coordinate the placement of the paver patterns. For the pre-installation meeting the Contractor shall have a minimum 5' x 5' area dry laid of a typical section of walk, as well as smaller areas of all the other paver patterns to be used on the project. The sample patterns shall remain until the corresponding pattern has been approved by the Engineer.

Submittals. The Contractor shall supply the following submittals for approval by the Engineer:

(a) Samples. Submit samples of type and finish color of the Belgian Block Pavers specified.

(b) Qualification Data. Submit installer qualifications verifying years of experience; include list of completed projects having similar scope of work identified by name, locations, date, reference names and phone numbers.

Delivery, Storage, and Handling. Deliver, store, handle and protect products in accordance with manufacturer's instruction. Store in protected and dry area in manufacturer's protective shipping crates or packaging.

Contents of all packages delivered to the site shall be examined immediately upon delivery and any units damaged during shipping will be subject to rejection. Contractor shall inspect the shipment to assure that all items are complete.

Do not use pavers with chips, cracks, voids, discolorations, and other defects, which might be visible or cause staining in the finished work.

Use full units without cutting wherever possible. Where necessary, Contractor shall cut pavers with motor driven saw equipment designed to cut masonry with clean, sharp, unchipped edges. Cut units as required to provide the pattern shown and to fit adjoining work neatly.

Set pavers in the patterns shown with uniform joints.

Setting Belgian Block Paving (Median):

(a) Belgian Block Paving (Median): Belgian Block paving in the median shall be set on a mortar setting bed with a maximum joint space width between pavers of 1". Surface of mortar joints shall be recessed approximately 1" to give the finish surface a rough texture appearance. Belgian Block Pavers set on sand shall have minimum joint spaces between pavers, and the joints shall be filled to surface level at the top edges of the pavers. All Belgian Block Pavers shall be set in a running bond pattern as shown on the plans. Use full pavers without cutting where possible. If required, hammer cut pavers to provide rough edges similar to full size pavers. Cut pavers as necessary to provide pattern indicated and to fit adjoining work neatly. Cutting with a motor driven masonry saw is not acceptable.

1. Premolded expansion joints ½" thick shall be provided between the back of the curb and Belgian block paving and between paving surfaces, including the concrete base, as specified on the contract documents. This joint shall be sealed in accordance with Section 603.03.01. Expansion joints shall occur at all intersections of paving material and vertical surfaces.

2. Premolded expansion joints ½" thick shall be provided through the concrete base at intervals not greater than ten (10) feet by twenty (20) feet and shall be located to coincide with the joints in the contiguous concrete curb and gutter.

3. Expansion joints shall extend beyond the top surface of the concrete base and through the mortared Belgian block paving. Align Belgian block paving joints with the expansion joints to minimize cutting of Belgian block pavers.

4. Where required, the graded aggregate subbase material shall be installed and compacted to the depth shown on the plans in accordance with Section 501.

Setting Belgian Block Paving (Tree Pits):

(a) Belgian Block paving at the tree pits shall be set on a 1" thick sand setting bed with weed barrier between the sand layer and soil mix. Belgian Block Pavers set on sand shall have minimum joint spaces between pavers, and the joints shall be filled to surface level at the top edges of the pavers and fog lightly with water. All Belgian Block Pavers shall be set in a running bond pattern as shown on the plans. Use full pavers without cutting where possible. If required, hammer cut pavers to provide rough edges similar to full size pavers. Cut pavers as necessary to provide pattern indicated and to fit adjoining work neatly. Cutting with a motor driven masonry saw is not acceptable.

MEASUREMENT AND PAYMENT.

Belgian Block Paving on Mortar Setting Beds will be measured at the Contract unit price bid per square foot, for which measurement shall include the graded aggregate subbase, concrete base, and mortar setting bed, mortar joints and expansion joints..

Belgian Block Paving on Sand Setting Beds will be measured at the Contract unit price bid per square foot., for which measurement shall include the sand setting bed, leveling and compaction, and weed barrier.

The number of necessary utility adjustments will not be measured, but will be considered incidental to the cost of the pavers.

Coordination with the City by the Contractor regarding installation of parking meter posts will not be measured but will be considered incidental to the cost of the pavers.

Belgian Block Paving on Mortar Setting Beds will be paid for at the Contract unit price bid per square foot, which price and payment shall be full compensation for the furnishing of all labor, materials, equipment, services for and incidentals for the installation of all Belgian block paving units in the specified patterns with mortared joints as indicated on the Contract Plans. Payment also includes the mortar setting bed, mortar joints, expansion joints, concrete base, and graded aggregate subbase.

Belgian Block Paving on Sand Setting Beds will be paid for at the Contract unit price bid per square foot, which price and payment shall be full compensation for the furnishing of all Belgian

block pavers, sand setting bed, weed barrier, leveling, compaction, labor, materials, equipment, services for, and incidentals for, the installation of all Belgian block paving units in the specified patterns as indicated on the Contract Plans.

CATEGORY 700
LANDSCAPING

ROOT BARRIER

DESCRIPTION. The work shall consist of the procurement and installation of a root barrier system in each tree pit along Central Avenue and Orleans Street, and all necessary material, labor, incidentals, tools and equipment to complete this work. Root barrier shall be installed in accordance with the Plans, these Special Provisions and as directed by the Engineer.

MATERIALS. Root barrier shall match in quality and type the following, or approved equal by the Engineer:

Root Barrier. Root barrier shall be a non-woven, non-biodegradable fabric, provided as 24" wide roll stock in varied lengths. Fabric shall be impregnated with Trifluralin to control the direction of root growth.

Or approved equal by the Engineer.

Submittals. The Contractor shall supply the following submittals for approval by the Engineer:

(a) Samples: Submit for approval, product samples and manufacturer's literature of the root barrier proposed.

(b) Qualification Data: Submit installer qualifications verifying years of experience; include list of completed projects having similar scope of work identified by name, locations, date, reference names and phone numbers.

Delivery, Storage, and Handling. The Contractor shall be responsible to Deliver, store, handle and protect products in accordance with manufacturer's instruction. The Contractor shall store products in a protected and secure area in manufacturer's protective shipping crates or packaging.

Root barrier shall not be left exposed to surface water or sunlight for more than 12 hours. Root barrier is ready for installation as received. The fabric should be in soil as soon as practical after removal from the sealed shipping container, minimizing exposure to direct sunlight and elevated temperatures. Root barrier should not be installed in water. Store any unused portions of the product tightly resealed in the original container in a dry place.

The Contractor shall examine the contents of all packages delivered to the site immediately upon delivery and any units damaged during shipping will be rejected. The Contractor shall inspect the shipment to assure that all items are complete.

CONSTRUCTION.

Contractor shall wrap all exposed drain lines and pipes, joints, or other critical locations where moisture or air may attract roots within the tree pits with the root barrier. Make sure that the wrapped fabric overlaps itself by 3 inches minimum, including joint overlaps.

Conduits, if exposed within the tree pit, shall be covered with root barrier, or if completely exposed shall be wrapped entirely with root control system, overlapping joints by 3 inches minimum.

Contractor shall assure that when joining two pieces of root barrier together they do not become separated at any point. Seaming can be accomplished by two methods; using construction adhesive and/or overlapping. If the method is by overlapping the fabric, seams shall be overlapped a minimum of 3 inches. Sod pins may also be used for seams, but make sure there are no gaps.

Pins, industrial tape or adhesives, or plastic or metal bands may be used to hold root barrier in place.

Prior to installation of trees, install root barrier vertically on all three sides of the tree planting pits which abut adjacent sidewalk surface. It is not necessary to place barrier at back of curb. Fabric should extend a minimum of 18" beyond the structure area to be protected as roots can grow around edges of fabric. The top edge of the fabric must be even with the soil surface.

Place top edge of root barrier at finish grade (soil surface) of the three interior sides of the planter, securing with pins (provided) or adhesives described herein. Attach root barrier to the edge of adjacent pavement surface using hot or cold adhesive

(a) For hot application use general adhesives hot melt #64x884 or approved equal by the Engineer.

(b) For cold applications use Macco, Liquid Nails Heavy-Duty adhesive LN-901 or equal by the Engineer.

Do not allow gaps in product during installation or backfilling of tree pits.

Backfill carefully over root barrier with planting soil mix to avoid dislocating the root barrier. Compact firmly.

MEASUREMENT AND PAYMENT.

(a) Root Barrier for Utility Wrapping: Root barrier placed over existing/ proposed duct banks and conduits which are located within the excavated/exposed tree pit or directly below the tree pit; will be measured and paid for at the Contract unit price per linear foot (LF), complete and installed. The payment shall be full compensation for root barrier, anchoring devices,

adhesives, and for all materials, equipment, labor, tools, and incidentals necessary to complete the work.

(b) Root Barrier for Tree Pit Perimeter: Root barrier placed at the perimeter of the tree pits will be measured and paid for at the Contract unit price per linear foot (LF), complete and installed. The payment shall be full compensation for root control system, anchoring devices, adhesives, and for all materials, equipment, labor, tools, and incidentals necessary to complete the work.

CATEGORY 700
LANDSCAPING

SECTION 710 – TREE, SHRUB, AND PERENNIAL INSTALLATION

710.03.22 Establishment Phase.

DELETE Section (a) – Period of Maintenance and REPLACE with the following:

(a) Period of Maintenance. The Contractor shall maintain all plantings for a landscaping warranty period of two (2) years. The landscaping warranty will begin at the Semi-Final Inspection and continue for a period of two years until Final Acceptance when the maintenance requirements are turned over to the City. The Contractor is also responsible for grass cutting (cutting back ornamental grasses in early spring), pruning and weeding during the two-year warranty period.

INSERT the following at end of Section (b) – Plant Watering:

Contractor shall provide 24 additional waterings of plants over the Two Year Period of Maintenance, during the months of June, July and August. Watering intervals shall be spaced approximately one (1) week apart or as weather and soil moisture content dictates.

CATEGORY 800
TRAFFIC

SECTION 801 – CONCRETE FOUNDATIONS

EZ PARK MACHINE BASE

801.01 DESCRIPTION

SUPPLEMENT: with the following.

This work also consists of furnishing and placing concrete foundation bases with a City furnished base anchor for an EZ Park Machine at locations specified in the Contract Documents and as directed by the Engineer.

801.02 MATERIALS

SUPPLEMENT: with the following.

Curing Materials	902.07.03
Concrete Mix No. 2	902.10

Less than 1 ft^3 of Mix. No. 2 Concrete is needed per base.

801.03 CONSTRUCTION

SUPPLEMENT: with the following.

801.03.06 Removal of Existing EZ Park Machines. Prior to beginning work the contractor shall contact The Parking Authority of Baltimore City (PABC) at 443-573-2800 and the Department of Transportation Meter Shop at 410-396-7575 to verify the locations of existing parking meters or E-Z Park Machine. Please contact the PABC and the Meter Shop 72 hours in advance for the parking meter heads/E-Z Park Machines to be removed or bagged. The Meter Shop shall remove all parking meter heads. It is the responsibility of the contractor to remove and dispose of the existing meter post/E-Z Park Machine Bases if called for in the contract documents or directed by the Engineer.

801.03.07 Installation of EZ Park Concrete Bases. The contractor shall also notify the PABC 72 hours in advance when ready to reinstall the E-Z Park Machines concrete bases. PABC will arrange with the Engineer to have new E-Z Park Machine base anchors delivered to the contractor.

The Contractor shall excavate for the new concrete base, install forms, expansion material and concrete with the City furnished base anchor as specified in the Contract Documents.

801.04 MEASUREMENT AND PAYMENT

SUPPLEMENT: with the following.

EZ Park Machine Base will be measured and paid for at the Contract unit price bid per each. The payment will be full compensation for all excavation, disposal, forms, Mix No. 2 Concrete, expansion material, installation of the City furnished base anchor, backfill, and for all material, labor, equipment, tools, and incidentals necessary to complete the work.

Removal and disposal of the existing meter posts and foundations shall be considered as incidental to EZ Park Machine Bases.

CATEGORY 800
CATEGORY TRAFFIC

ELECTRICAL CONDUIT AND FITTINGS

805.01 DESCRIPTION.

DELETE: 805.01 DESCRIPTION

ADD: The following:

This work shall consist of the installation of polyvinyl chloride duct sections for the installation of cables and conductors in City-owned duct systems carrying electrical power, street lighting, traffic signalization, fire department communications and services, and fiber optic systems at the locations specified on the Plans and in accordance with these Special Provisions and as may be directed by the Engineer. This work shall also include protection of existing telecommunication conduit system and manhole structures.

805.02 MATERIALS.

DELETE: 805.02 MATERIALS

ADD: The following:

Full Round Duct and Fittings

1. For standard concrete encased duct bank installation: Virgin Polyvinyl Chloride (PVC), Type DB 120 as per ASTM F 512, current edition.

2. For casing pipe/ duct bank installation: Rigid Polyvinyl Chloride (PVC) Schedule 40 as per ASTM D 2466 and D 2672.
   a. Duct and fittings shall be UL Approved and Listed and rated for wire temperatures of 90°C. Solvent cement for full round duct and fittings shall be as per duct item manufacturer's printed instructions.
   b. Duct sections to be installed with a radius less than 35', shall be PREFORMED FACTORY-FABRICATED SEGMENTAL SECTIONS. Install preformed 11.25° segmental sections for duct sections between 12' and 35' radius. Preformed radius sweeps shall be used for duct sections with less than 12' radius.

Split Duct and Fittings: Virgin PVC, Type 1 or Type B. Split duct jointing materials including joiner strips, reinforcing straps, and sealing tape shall be as per duct manufacturer's printed instructions. All split duct and fittings shall be furnished by the Contractor. See Detail BC 802.03 for Split Duct Configurations.

Jointing materials at tie-ins to existing systems: Impregnated woven glass fabric and primer and sealer, as recommended by duct and fitting supplier.

Encasement:

3. Concrete: Mix No. 1 and 3, Section 902.10.

4. Flowable fill for Casing Pipes: Shall be certified by the manufacturer to have a 12.0 minimum pH after curing, a 105 psi minimum confined compressive strength, a 2,000 ohm-em minimum initial resistivity, and a 7,800 ohm-em minimum ultimate resistivity. The flowable fill shall be tested by the manufacturer to verify compliance with the specified physical properties, and test results shall be provided to the Engineer for approval.

End Adapters: See Detail BC 802.03, Sheet 3 of 3, for PVC Bell End Adapters and duct terminators.

Pull-lines: Braided Nylon 400# Minimum Tensile Strength shall be installed in all new ducts.

Mortar Masonry: As per Sections 903.02 and 903.06.

Dampproofing: As per Section 913.01.03.

Duct Spacers: High-density polyethylene bore spacers and self-supporting vertical and horizontal locking type spacers to provide 2" minimum clearance between all ducts.

Non-shrink Grout: Non-metallic, meeting initial placement volume maintenance as proven by ASTMC827.

Strapping Bands with Buckles: Type 201 Stainless Steel, Bands at 1" x 0040".

Reinforcement: As per Section 908.01.

Cushioning Material: Extended close cell, polystyrene foam board stock with compression strength of 25 psi when tested in accordance with ASTM DI621.

Backfill: As per Section 916.01.01.

Electrical Splice Enclosure

Where temporary rerouting of existing underground or above ground traffic signal Communication cable is required at LMH C-2 415, a temporary waterproof type splice enclosure or splice case of appropriate size for the cable/cables must be supplied. One (1) each, waterproof type splice closure shall be provided for each 25 pair copper-wire communications cable. The splice enclosure must have a spare access port and provide access for maintenance of cable splices. All copper

wires/cables shall be identified and tagged, indicating its origin and or its destination. Each cable pair shall be identified, indicating its "line number" Tag material shall be of heat shrink black print, white background and be of appropriate size for the application. Splice enclosures will be placed in vault/manhole. The cable entrance and splice enclosure location shall be determined by the City of Baltimore Signal Maintenance Engineer.

Wire splice connectors shall be of waterproof type rated and appropriately sized for wires in place. All splices shall be made using an appropriate type/size wiring crimping tool. Labeling tags shall be printed using the latest version of a thermal transfer type bar code label/tag printer. The printer shall be capable of producing labels from 1 inch up to 4.25 inches wide. Labeling software and thermal transfer printer shall be purchased by the Contractor for this project and shall become the property of the City of Baltimore at the conclusion of the project. The wire crimping tool shall be come the property of the City of Baltimore at the conclusion of the project.

805.03 CONSTRUCTION.

DELETE: 805.03 CONSTRUCTION

ADD: The following:

All trenching and excavation for duct trenches shall be performed in accordance with the provisions of Section 809. Trench width shall be of sufficient width to accommodate duct concrete encasement.

Underground ducts shall be of the size and configuration as specified on the Contract Plans. Where no profiles have been shown, ducts to be installed, excluding customer service ducts, shall have a minimum sidewalk cover of four (4) feet and minimum roadway cover of three feet, six inches (3'6"). Customer service ducts originating from electrical manholes shall be laid to ensure drainage away from customer's below-grade point of duct entrance; depths of cover on customer service ducts will, in general, vary from eighteen (18) to forty-eight (48) inches.

Where it is not possible to adhere to the cover shown on the Contract Drawings because of an underground obstruction, the Engineer shall be notified and the configuration of the duct section or depth of cover will be revised.

Solvent cement all duct and fitting joints using the materials and methods recommended by the conduit manufacturer. Duct having a defective joint shall not be installed.

Securely fasten assembled duct systems in place during construction by a method approved by the Engineer to prevent movement and floatation during concrete placement. Plug open ends of all ducts with readily removable PVC plugs furnished by the duct manufacturer. Construct formwork for all concrete encasement.

The work of relocating and reshaping existing City-owned, existing occupied duct banks shown on the Contract Drawings shall be done jointly by the Contractor and cable owner as follows:

1. Contractor shall excavate and expose the top and sides of the existing duct bank throughout the excavation limits.
2. Cable owner will then remove existing encasement and ducts from around in-service cables occupying them. [Note: The BGE Company notes that, 1.) they will require 30 days notice, Ms Lynn Grossman, 410-470-7868, prior to the date their presence is required in the field, 2.) Encasement/duct break-out will be performed at no charge to the Contractor; however, the Contractor will be responsible for removal from the trench of the materials of demolition, and 3.) Encasement/duct removal will proceed at an approximate maximum rate of 35 feet per day, which refers to the entire duct bank and not the individual occupied or unoccupied ducts]. To the maximum extent possible, the Contractor shall coordinate his total work operations to ensure a minimum frequency of times that the Cable Owner is required at the project site.
3. The Contractor is required to furnish and install a support system to support cable occupied ducts across the excavation limits. The support system shall be in accordance with the cable owner's criteria and standards. The Contractor shall prepare and submit for approval, working drawings showing the support system. The drawings will be reviewed by the cable owner and the Engineer. The Contractor shall furnish and install the approved support system.
4. Cable owner will install Contractor-supplied split duct, temporarily realign the duct and attach it to the approved support system. This work will be performed on cable occupied ducts only. Prior to split-duct installation, the Contractor shall "rod" all remaining existing unoccupied ducts to the next adjacent manhole to determine duct "cleanness". Before commencing any "rodding" operations, it is mandatory that the Contractor contact Mr. Clarence Swann, Phone: 410-396-1263 a minimum of five (5) working days in advance in order that City inspection personnel may be assigned to the work.
5. Subsequent to backfill operations, the Contractor shall complete construction of the proposed total duct bank and abandonment of the old duct bank.
6. Contractor shall place the specified encasement around completed duct bank and shall commence compacted backfill operations after curing of encasement.
7. Contractor shall provide all materials required to install, relocate, support, and/or rearrange existing duct bank configuration.
8. The maintenance-in-service of supported duct systems, and the protection and security thereof is the total responsibility of the Contractor.
9. Cable owners shall not be precluded from any inspection, maintenance, reinforcement of or extension of their installed facilities during the life of the Contract, and with ingress and egress to such facilities granted, without delay, by the Contractor.

Install duct systems and encasements using the details shown in the Plans and the clearances shown in Detail BC 824.01 for Standard Duct Sections.

Chute-deposit concrete as close as possible to the top of the duct, with the concrete directed down along the formwork wall to the bottom of the duct section. Spade concrete between vertical rows of duct carefully to ensure the absence of voids, and to avoid the dislodging of duct runs. Under no condition shall concrete be allowed to "drop" a vertical distance of 3 feet or more without the benefit of a chute or trough to convey same. Completed encased duct sections shall be of the sizes shown on the Contract Drawings and, due to the complexity of the total below-grade utility systems, in no instance shall excess concrete be disposed of indiscriminately atop the design sections, within the trench or trenches or excavations, or upon grade.
Terminate proposed duct runs in existing and proposed manholes using plastic terminators, or where acceptable to the Engineer, by using molded end bell adapters and flush with the inside face of the manhole wall. Openings required in existing manhole walls shall be made by the Contractor who shall also be responsible for the concreting-in or mortaring-in of the end bells. Brick masonry for casing pipe bulkheads and duct abandonments shall be constructed as per Section 463.03.

Where required, duct shall be saw cut, with all cut ends perpendicular to duct centerline, smooth, and free of burrs and fins. Duct ends shall be accurately tapered or finished to properly mate with couplings and fittings. All duct jointings shall be sealed with waterproof solvent cement as per duct manufacturer's printed instructions.

Inspection and Testing

1. A braided nylon line, having a minimal tensile strength of four hundred pounds (400 lbs), shall be installed in each duct.
2. Each duct shall be tested in the presence of the Engineer. A test device made from ridged material not more than one-half inch (1/2") smaller than the bore of the duct, and a minimum of two feet (2') long, shall be passed through each duct. The device shall be so constructed as to prevent its use through bends whose radius is less than twenty feet (20'). Any duct through which the device cannot be passed shall be repaired by the Contractor to the satisfaction of the Engineer with no additional compensation from the City.
3. All manholes shall be inspected for proper duct entries, terminators, bell ends, pulling in irons, concrete seal around duct, caps or lugs, pull lines and grout seals between the frame and chimney.
    a. The duct line sizing device is to be used as a "go" gauge for new PVC duct and will be used on the basis of a receipt signed by the Contractor.
    b. Use of the device must be observed by the Engineer. Arrangements are to be made at least three (3) days in advance.
    c. Prior to testing, the Contractor shall assure that the bore of all the ducts are clean and clear of fins, burrs or sharp edges and dry.

d. The contractor shall supply labor and equipment necessary to gauge the new duct.
e. If the device meets any resistance within the run of duct, the operation shall stop and the device recovered at its starting point.
f. Any duct which has resistance to the passing of the device will not be accepted.
g. Final acceptance of the conduit system will not be made until completion of all the Work in the Contract including completion of cable Work and viability and continuity of cable service acceptance in the specified duct system.

Apply dampproofing asphaltic material on existing exterior face of building structure wall in accordance with Section 422.

Installation of proposed duct banks within casing pipes shall, in general, be performed as follows:

1. After the casing pipe is installed, check to make sure it is clear of obstructions.
2. Due to the lack of working space to insert schedule 40 PVC conduits into the casing pipe, insert short lengths of PVC conduits with bore spacers at five (5) feet O.C.
3. Great care must be taken to cement all conduit joints. The pressure created while pumping flowable fill could force the fill through a joint if not properly cemented.
4. Strap around duct formation not more than 6 inches from the bore spacer. Do not pull so as to deform the duct formation but pull enough to cause the ducts to pinch the bore spacers.
5. Use a push plate to advance the duct formation into the casing pipe. The plate shall be large enough to bear against the ends of all the ducts.
6. Attach duct couplings and install another section of ducts and advance the duct formation into the casing pipe.
7. At each end of the casing pipe, construct masonry bulkhead with duct couplings and temporary plugs and commence flowable fill operations.
8. Pump flowable fill through bulkhead opening at crown of casing pipe until flow is forced out of the other end bulkhead opening at pipe crown.
9. Do not extend ducts until the pumping of flowable fill is completed and duct rodded/mandreled and accepted by the Engineer.
10. Subsequent to completion of proposed culvert section, the contractor shall extend schedule 40 PVC conduits to electrical line manholes as per Contract Drawings.
11. Completed duct runs between line manholes shall be mandreled and accepted by the Engineer.

Installation of proposed consumer duct services (services replacing presently existing systems) shall, in general, be performed as follows:

1. Install proposed consumer ducts flush with inside face of existing building structure wall where service is being carried to; new service shall be installed through-wall at same elevation as existing service and no closer than three (3) inches horizontally thereto.
2. Engineer will contact BG&E Co. who will provide personnel to:
    a. De-energize service and remove existing in-service cables and conductors, and
    b. Install new conductors in the new consumer duct system from a point of feed to a terminal point, selected by the BG&E Co., within the consumer's premises; energize service.
3. Subsequent to tie-in/energizing of new conductors the Contractor shall:
    a. Patch wall penetration of new duct system, for full wall thickness, with non-shrink grout and dampproofing.
    b. Break-out exiting duct at exterior face of structure wall, patch wall penetration for full wall thickness, dampproof as noted above; install masonry bulkhead in open ends of existing duct remaining in the ground.

Existing duct systems that require modifications in order to properly accommodate new line manhole construction shall be modified as follows:

1. Where duct "crates" or "openings" in existing systems are square, install Full Wall Square to Round Bore PVC Adaptors (similar to Detail BC 802.03) to adapt to 4" PVC duct, but only in those square duct openings not occupied by in-service conductors. Extend all unoccupied ducts into structure walls.
2. The BG&E Co. will be responsible for split duct and fitting installations for all "crates" or "openings" carrying in-service conductors slated to remain in-service; split duct and fittings, however, shall be furnished by the Contractor.

Subsequent to exposing the top and sides of the existing telecommunication conduit systems, it is mandatory for the Contractor to notify Verizon at least fourteen (14) working days in advance in order for Verizon personnel to protect/span the existing cable systems over the proposed culvert construction and for placement of existing cable systems through the proposed culvert roof slabs. Verizon will replace and reshape the individual conduit runs as a single bank The Contractor shall backfill the conduit runs to Verizon's standards, and the Contractor shall also encase the conduit runs into the proposed culvert roof slabs.

The Contractor shall support and maintain, in-service, Verizon's conduit system during trenching and backfilling operations for proposed utility systems.

Damage to the conduit system and in-service cables caused by Contractor's work operations will be repaired by Verizon at Contractor's expense and for which additional compensation will not be allowed under this Contract.

Where proposed traffic and electric conduits are shown running parallel together, both conduit systems shall be installed in the same trench and concrete encased as one ductbank unless noted otherwise.

805.04 MEASUREMENT AND PAYMENT.

DELETE: 805.03 MEASUREMENT AND PAYMENT

ADD: The following:

Item Electrical Conduit and Fittings will be measured and paid for at the Contract unit price per unit for the length of Item Electrical Conduit and Fittings installed and accepted. The payment for Item Electrical Conduit and Fittings as specified in the Contract Documents will be full compensation for all material, labor, equipment, tools, and incidentals necessary to complete the work including coordination, utility support systems, excavation, dewatering, furnishing and installing of split and round ducts, flowable fill, fittings, adaptors, spacers, terminators, couplings, end bells, specialty items, .jointings, concrete encasement, pull lines, core drilling into existing manhole and/or foundation walls, backfill using CR-6 or RC-6 stone, and all incidentals necessary to complete these items of work.

Conduit Protective Slab (Detail 824.08) will be measured and paid for at the Contract unit price per square foot for the length installed and accepted.

CATEGORY 800
CATEGORY TRAFFIC

ELECTRICAL MANHOLES

811.01 DESCRIPTION.

ADD: After the first paragraph.

This work shall consist of the construction and installation of cast-in-place electrical manholes, removal and replacement of roof slabs on existing manholes, demolition and complete removal of existing manholes at locations of new manholes, work operations in existing manholes, and all excavation and other incidentals necessary for manhole construction at the locations specified on the Plans and in accordance with these Special Provisions and as may be directed by the Engineer.

811.02 MATERIALS.

DELETE: 811.02.02 Manholes

ADD: The following:

Cast-in-place Manholes: As per Baltimore City Details, as applicable, Contract Drawing details, and as appended in this Specification Section; all concrete shall be Mix No. 6 as per Section 902.07.03 and 902.10.

Modifications to existing manholes:

1. Concrete: Mix No.3, as per Sections 902.07.03 and 902.10.

2. Reinforcement: As per Section 908.01.

Access Frames and Covers: As per Section 909.04 and Baltimore City Details BC 825.12 and 825.13

End Bells and Terminators: See Baltimore City Details BC 802.03, Sheet 3 of 3 and BC 826.07, Sheets 1 & 2 of 2.

Mortared Masonry: As per Sections 903.02 and 903.06.

Backfill: As per Section 916.01.01.

Electrical Splice Enclosure: NEMA 4, 36"L x 24"W x 12"D cast aluminum box for surface mounting and hinged adjustable cover for easy access with stainless steel cover bolts; fasten box to wall with wedge expansion anchors. Cable entrances and wall mounting location to be determined by Baltimore City Traffic Section.

811.03 CONSTRUCTION.

ADD: The following:

The Contractor is required to complete the construction of proposed LMH C-2 415 with electrical splice enclosure prior to the relocation of the existing traffic signal communications cabinet on the southwest corner of Baltimore Street and Central Avenue. See Construction Documents for proposed traffic and electrical conduit/cable operations.

Contact BG&E Company and the Baltimore City Conduit Section through the Engineer and request their presence at the site for technical advice regarding proposed work operations.

Cast-in-place Manholes:

1. As per Baltimore City Details Nos. BC 825.11, 825.12 and .13; and in accordance with the details on the Contract Plans.
2. Design loading all components: Highway, HS 25-44.
3. Where placement of concrete recessed extensions, terminators, and wall openings for duct entrance interrupts wall reinforcement, one-half (1/2) of the interrupted steel shall be placed vertically and horizontally on each side of the wall opening. In addition, 4 -#5's x 36" long shall be placed diagonally, each face, at wall opening corners.
4. Minimum of 12 pulling-in irons per manhole, see Baltimore City Detail BC 826.08.
5. Duct terminators, where shown on the Plans, shall be installed prior to pouring of concrete.

See Contract Drawing details with regard to manhole wall faces that are coincident for existing/new construction.

Installed 36" diameter access cover shall be flush with adjacent project finished grade and shall be located at the geometric center of manhole roof and as per details shown on Contract Drawings.

Perform, when directed, backfilling/compacting operations as per Section 302 Standard Specifications.

Cable protection procedures during new manhole construction:

1. Contact BG&E Company to request their presence at the site for technical advice regarding proposed work operations.
2. Prior to removing the existing manhole roof, the Contractor shall erect a temporary decking under the roof and over the cable and equipment in the manhole.

3. After the roof and temporary decking are removed, the Contractor shall erect a cable support system across the manhole excavation limits meeting the respective cable owner's requirements. .
4. Cable owners, with the assistance of the Contractor, will safely detach their cables from the existing manhole walls and suspend/sling cables from the overhead cable support system. Each sling shall also be installed with stranded steel wire to support cable load from the overhead cable support system and long enough to extend 6" below the new manhole roof slab.
5. Commence manhole wall and floor slab demolition. Structures to be demolished/removed may include the following materials: miscellaneous metals, mortared stone or masonry, or plan or reinforced concrete. All materials of demolition shall be removed from the project site.
6. Unoccupied existing ducts not to be extended into new manhole wall construction or ducts to be abandoned shall have their open ends bulkheaded 'with mortar masonry.
7. Existing ductbanks that require modifications utilizing split duct and fittings around in-service cables/conductors in order to terminate ductbanks flush with new manhole walls shall have work performed by BG&E Company. The Contractor shall provide/install/maintain primary duct support system during all phases of manhole removal/reconstruction operations.
8. Construct new manhole structure complete with roof slab.
9. Cable owners, with the assistance of the Contractor, will safely detach their cables from the suspended slings and the cables reracked to the new walls. Cut/remove suspended slings and cable supports.

Extreme caution shall be observed at all times during work operations in and/or adjacent to existing and proposed structures carrying in-service conductors.

After completion of proposed and existing manhole construction operations, the Contractor shall remove all construction material and hardware that has accumulated in the manhole invert.

In those instances where additional manhole wall openings are required to maintain existing conductors in service during new manhole construction operations, the additional openings shall be repaired by the Contractor using Mix No. 3 concrete subsequent to transfer of conductors by the BG&E Company. Where new or enlarged wall openings are required in existing manholes to be maintained in service, the opening shall be cut out to neat lines and, where applicable, a maximum amount of bar reinforcement shall be retained subsequent to duct operations in these manholes, the wall opening shall be repaired using Mix No.3 concrete. Cost incurred for breakout and repair of wall openings in existing manholes shall be included in the various unit prices bid in the Proposal for "Duct Section". See Contract Drawings for systems entering existing manholes.

Brick masonry shall be constructed as per Section 463.03.

811.04 MEASUREMENT AND PAYMENT.

ADD: After the first paragraph.

Demolition and complete removal of existing manholes at the locations of new manholes will not be measured, but the cost will be considered incidental to the construction of new manholes.

CATEGORY 800
TRAFFIC

CONCRETE FOUNDATIONS FOR BALTIMORE CITY TRAFFIC, LIGHT, AND PEDESTRIAN STRUCTURES

DESCRIPTION. Construct concrete foundations for Baltimore City type traffic signal poles, pedestal poles, and light poles.

MATERIALS.

A. Concrete: Concrete for foundations shall be Mix No. 3.

B. Steel Reinforcement: Steel reinforcement shall be ASTM A 65, Grade 60.

C. Non-Shrink Leveling Grout: Minimum Compressive Strength = 5,000 psi.

D. Epoxy Grout: Hilti-HY 150 Max Adhesive Anchoring System, or Equal. Minimum Tensile Strength = 18, 000 psi.

E. Anchor bolts, with the exception of pedestal poles shall be fabricated from high strength steel conforming to ASTM A-449 having minimum yield strength of 105,000 P.S.I. The anchor bolts shall be fully galvanized using the hot dip method in accordance with ASTM A-153. The top nine inches of each bolt shall be threaded. There shall be four (4) anchor bolts provided for each pole. Each bolt shall be provided with two (2) hex nuts conforming to ASTM A-194, Grade 2H and (2) flat washers conforming to ASTM F-436. Both nuts and washers shall be hot dip galvanized. After galvanizing, the nuts shall fit onto the threaded end of the anchor bolts hand tight. Each anchor bolt shall be furnished with plated steel nuts and plated flat washer conforming to ASTM F-436.

F. Foundations for pedestal poles shall be provided and installed in accordance with Maryland Department of Transportation, State Highway Administration (MDSHA) standard detail number MD 801.01-01. Bolt pattern will match the City of Baltimore Detail provided in the detail section. Female anchors with stainless steel ferrules, breakaway couplings, aluminum skirts and one spare breakaway coupling per pedestal foundation will be provided as incidental items for each pedestal pole foundation. The spare breakaway couplings will be delivered to:

Contact: Mr. Paul Manik
Phone: (410) 396-9065
Address: 1620 Rappolla Street, Baltimore, MD 21224
Hours: 8AM to 4PM weekdays by appointment only

G. Ground Rods Section 804.

CONSTRUCTION. The Contractor shall perform all excavation to neat lines for the levels and dimensions specified in the Contract Documents. All excavation work will be inspected and approved by the Engineer before proceeding with construction. Approved material selected from the excavation shall be used for backfill.

Excavation for foundation installation shall be by hand method; or mechanical method, if specified in the Contract Documents. All foundations shall be Test Pit using non-destructive methods to ensure clearance from obstructions and utilities. In fill areas, the fill shall be completed prior to construction of the bases. The base excavation may be augured provided the top six inches (6") of the base is blocked square. Galvanized parts that have been cut or chipped to bare metal shall be repaired as specified in A.S.T.M. specification.

The Contractor shall furnish and install stainless or galvanized steel nuts and washers, if poles are to be installed as an item of work; otherwise, the nuts and washers furnished by the Contractor shall be delivered to the Engineer. It is intended that all concrete for foundations are poured against existing undisturbed earth. However, where the existing ground will not retain its shape during or after excavation, or if the excavation should show any tendency to cave in before placing the foundation, the Contractor shall provide a sleeve or form to retain the earth and receive the concrete. Sleeve material shall be composed of sheet steel formed to the required shape. The sleeve shall be carefully driven to the required depth. As the concrete is placed, the sleeve shall be carefully withdrawn so that the wet concrete will flow into intimate contract with the sides of the excavation. All concrete for foundations shall be placed in a continuous operation. When the sleeve is entirely withdrawn, provide above grade forms and templates to complete the foundation.

Concrete shall not be placed in the foundation by dumping from the top. If there is no groundwater present in the excavation, the method of placing the concrete shall be approved by the Engineer. If there is groundwater in the foundation, the concrete shall be placed by tremie or other method approved by the Engineer. The concrete in a foundation shall be vibrated.

Bases for signal and lighting structures shall be installed to the grade of adjacent footway or as indicated in the Contract Documents. Poured concrete foundations shall be allowed to cure for at least 72 hours prior to installing the poles.

Concrete shall be mixed, placed and tested as specified in the contract documents. Footings including reinforcement and bolt circle data shall be as specified in the Contract Documents or in conformance with approved working drawings. Anchor bolts shall be plumb. Suitable templates for setting anchor bolts shall be supplied by the Contractor and shall be accurately placed and left in place until the concrete has attained its initial set. Two of the bolts shall be on a line parallel to the roadway unless otherwise indicated in the Contract Documents. Tops of foundations shall be screened to a dense smooth finish. Exposed surfaces shall be cured by use of a liquid membrane curing compound. The top 6" of base shall be boxed square. Elbow(s) of the type(s) and size(s) specified shall be placed in each foundation.

MEASUREMENT AND PAYMENT. Measurement of this item will be on a per each basis and quantity to be paid for will be the actual number of signal, pedestal, lighting and/or joint-use pole bases of various sizes actual installed and accepted. This work will be paid for at the Contract Unit price bid per each, for the specific Signal, Pedestal, Lighting and/or Joint Use Pole bases indicated in the Proposal, which price and payment shall constitute full compensation for all materials, labor, tools, equipment, hauling, cement concrete, formwork, finishing, anchor bolts, stainless steel nuts and washers, protective sleeves and nuts, female anchors, breakaway couplings, aluminum skirts, spare breakaway couplings, material delivery, galvanizing, compaction, re-compaction, disposal of unsuitable material, and incidentals necessary to complete the work.

CATEGORY 800
TRAFFIC

STEEL SUB-BASE FOR HOMELAND POLE

DESCRIPTION. This work shall consist of the furnishing and installing by the Contractor, steel sub-base per the typical detail drawing in the Contact Documents where required for proposed Homeland street light poles. Crushed aggregate specified herein shall conform to requirements specified elsewhere in these specifications.

CONSTRUCTION. The depth of excavation for the base shall allow for crushed aggregate to be placed in the bottom of the excavation to a depth of four inches.

The steel sub-base shall be installed so that the flat side faces the roadway and the area around the base shall be filled and compacted with approved material selected from the excavation. Crushed aggregate compacted in place shall be used to replace any unsatisfactory material from excavation.

The top of the base shall coincide with the proposed finished grade.

A 3-inch DB-120 PVC conduit elbow shall be installed in each sub-base.

A 5-foot minimum horizontal clearance will be required between all proposed lighting appurtenances and any existing water line and/or appurtenance.

The Contractor shall use care and caution while working over or around any water line and or appurtenance.

MEASUREMENT AND PAYMENT. Measurement for Steel Sub-Base Homeland Pole will be measured on a per each basis, and the quantity to be measured will be the number of complete assemblies furnished and installed and accepted by the Engineer.

Payment for Steel Sub-Base Homeland Pole will be made at the per each price bid in the Proposal, which price shall be full compensation for all steel sub-base, conduit elbows, ornamental bolt cover, furnishing and placing crushed aggregate in the bottom of the excavation and for replacing unsatisfactory material if required and all labor, materials, equipment, tools and incidentals necessary to complete the work.

CATEGORY 800
TRAFFIC

CONTROLLER AND CABINET FOUNDATION BASE

DESCRIPTION This work shall consist of furnishing and installing a City of Baltimore cabinet foundation as specified in the Contract Documents. All equipment shall be compatible with existing equipment.

MATERIALS.

Base Mounted NEMA Controller Cabinet Foundation Base. Base mounted cabinets shall be mounted on concrete foundations conforming to Section 801 and as specified in the Contract Documents. Conduit shall be furnished and installed as specified in Section 805. Conduit shall be as per Sections 902.10, 921.07.01, 921.07.03, and 950.11. Anchor Bolts, and Hardware, shall be as per the contract documents, and as approved by the City of Baltimore.

MEASUREMENT AND PAYMENT

Base Mounted NEMA Controller Cabinet Foundation Base. Concrete foundations for cabinet foundation bases will be measured and paid for at the Contract unit price per each. The payment will be full compensation for all concrete, excavation, corrugated metal pipe or forms, reinforcement steel, anchor bolts, backfill and for all material, labor, equipment, tools, and incidentals necessary to complete the work.

CATEGORY 800
TRAFFIC

CONCRETE ENCASED DB-120 LIGHTING CONDUIT

DESCRIPTION. This specifications cover the furnishing and installation of all the conduits, fittings pull and junction boxes, conduit expansion joints and incidental parts, necessary to provide for future lighting or operation of structures, The type, size and location of conduits, fittings and boxes will be as indicated on the Plans. The following pertains to work within the City of Baltimore only.

MATERIALS. Refer to Section 805.02 - Electrical Conduit and Fittings.

All lighting conduit shall be DB-120.

Duct and fittings shall be UL Approved and Listed and rated for wire temperatures of 90°C. Solvent cement for full round duct and fittings shall be as per duct item manufacturer's printed instructions.

CONSTRUCTION.

General.

1. The size of each conduit shall be such that the sum of the areas of the cross-sections of all conductors, including insulation and protective coverings, shall be not greater than thirty percent (30%) of the inside area of conduit except that no conduit encased in concrete or installed underground shall be less than two inches (2") inside diameter and no conduit small that three quarter inches (3/4") inside diameter shall be used except for fixture hangers.
2. All conduit sizes and conduit layouts shall be approved by the Engineer before installation and the Contractor shall submit data on the lay-out for the exact makeup, overall diameters and cross-sectional areas of the actual conductors he intends to use and the sum of the areas of the conductors in each conduit. All conduits used on a project shall be the product of one manufacturer.
3. Bends shall be of long sweep, free from kinks and of such easy curvature as to permit the drawing in of conductors without injury. The radius of curvature of inner edge of bends shall not be less than ten (10) times the inside diameter of the conduit except as may be otherwise noted on the Plans or in the Special Provisions. Conduits shall not be flattened or distorted. The total angle of all bends between any two (2) boxes, or fittings, shall not exceed two (2) quarter bends.
4. Exposed conduit runs shall be parallel to or at right angles to walls, slabs, girders, etc., and in locations giving greatest accessibility for painting and least accumulation of dirt. All exposed conduit runs shall be attached to steel masonry, concrete or timber by galvanized malleable iron or galvanized steel straps, clamps, or hangers of an approved type, held at not less than two (2) points by galvanized steel bolts or lag screws. The runs shall be supporting members, Conduits mounted o structural steel members shall be securely clamped to prevent rattling and wear.
5. All ends of conduits installed during construction, or for future use shall be closed against the introduction of foreign material by the use of standard pipe or brush caps. All conduits shall be

installed so that they will drain and necessary holes for this purpose shall be made as directed.

6. All conduits risers in railing post shall, unless otherwise shown on the Plans, terminate one inch (1") below the top surface of the post. The risers shall be accurately placed so that they may be located for future use.
7. All conduits installed underground shall have a Mix No. 1 Concrete envelope providing cover as indicated by the dimensions shown on the Detail Plates for Standard Duct Sections.
8. All traffic bearing ductwork shall be encased in Mix No. 1 Concrete. Concrete encasement shall be a minimum of 3" in all directions from the ductwork, as per Detail No. BC-824.01, and extend 3 feet from the curb unless otherwise noted in the plans.
9. Excavation for installation and encasement shall be carefully done, sidewalks trimmed to line and the bottom of trench graded so that the envelope will be uniform and there will be no pockets or low points in the conduit run. All backfill, regardless of class shall be carefully tamped to conform to the requirements of Section 204, unless otherwise specified. Care shall be taken that the concrete envelope, or conduit, are not injured.
10. In areas where a concrete footway currently exists, the Contractor shall remove the existing footway as required and excavate a trench of the width and depth as shown on the Detail Plates, or as directed by the Engineer. After the conduit is installed, the Contractor shall install CR-6 to the existing grade to provide a temporary and or permanent concrete footway.
11. All conduits, boxes, etc., to be encased in concrete must be accurately placed and rigidly held in position so that no variation form line or grade occurs when concrete is placed.
12. Conduits, fittings and boxes shall be stored under cover and above ground.
13. Upon completion of the conduit installation, the system shall be cleared by a pull through mandrel type device inserted in the presence of the Engineer before any conductors are installed. Immediately prior to the installation of conductors in any run, the conduits comprising that run shall again be checked. Any and all obstructions shall be removed to the approval of the Engineer.
14. The Contractor shall install and leave in place NO. 10 iron wire in all conduit runs installed for future use.
15. The Contractor shall furnish work drawings. Work drawings shall be twenty-two inches by thirty-six inches (22"x36") and shall be furnished in duplicate for Engineer's preliminary examination. After work drawings have been accepted by the Engineer, and revisions made the Contractor shall furnish additional copies as may be requested.

DB-120 Conduits and Fittings.

Conduit shall be cut with a saw and all ends shall be accurately tapered or otherwise finished depending on type of coupling specified. Tools recommended for this work by the conduit manufacturer shall be used and finished ends shall be equal to those supplied by the Manufacturer. All ends shall be smoothed of burrs and fins. Standard bends shall be used wherever possible and special bends shall preferably have a radius not lee than that of standard bends. All special conduits shall be accurately dimensioned and manufactured. All joints shall be sealed with waterproof joint sealing compound recommended by the conduit manufacturer and approved by the City. All joint thus treated shall be waterproof.

1. An expansion joint shall consist of a break in the conduit run with a space between ends of conduit as indicated on the Plans.
2. A conduit sleeve not less than eighteen inches (18") long unless otherwise indicated shall cover the break. The sleeve shall be rigidly anchored to the structure.
3. All underground ductwork shall have magnetically detectable plastic warning tape installed 12" above the duct for the entire length of the duct. The color of the warning tape shall be red for electric ductwork. Provide tape in rolls, 3 inches minimum width with warning and identification imprinted in bold black letters continuously over the entire tape length. Warning and identification shall be "CAUTION BURIED ELECTRIC LINE BELOW" or similar. Use permanent code and letter coloring unaffected by moisture and other substances contained in trench backfill material. Bury tape with printed side up. Three-foot (3') clearances are recommended between lighting conduits and meter vaults.

Inspection and Testing.

1. A braided nylon line, having a minimum tensile strength of four hundred pounds (400 lbs), shall be installed in each duct.
2. Each duct shall be tested in the presence of the Engineer. A test device made from ridged material not more than one-half inch (1/2") smaller than the bore of the duct, and a minimum of two feet (2') long, shall be passed through each duct. The device shall be so constructed as to prevent its use through bends whose radius is less than twenty feet (20'). Any duct through which the device cannot be passed shall be repaired by the Contractor to the satisfaction of the Engineer with no additional compensation from the City.
3. All manholes shall be inspected for proper duct entries, terminators, bell ends, pulling in irons, concrete seal around duct, caps or lugs, pull lines and grout seals between the frame and chimney.

    a. The duct line sizing device is to be used as a "go" gauge for new PVC duct and will be used on the basis of a receipt signed by the Contractor.
    b. Use of the device must be observed by the Engineer. Arrangements are to be made at least three (3) days in advance.
    c. Prior to testing, the Contractor shall assure that the bore of all the ducts are clean and clear of fins, burrs or sharp edges and dry.
    d. The Contractor shall supply labor and equipment necessary to gauge the new duct.
    e. If the device meets any resistance within the run of duct, the operation shall stop and the device recovered as its starting point.
    f. Any duct which has resistance to the passing of the device will not be accepted.
    g. Final acceptance of the conduit system will not be made until completion of all the Work in the Contract including completion of cable Work and viability and continuity of cable service acceptance in the specified duct system.

MEASUREMENT AND PAYMENT. This work will be paid for at the contract unit price bid per linear foot for which price and payment shall be full compensation for all trench excavation, conduit, concrete encasement, core drilling into existing manhole walls, waterproof epoxy, rodding, pavement patching, slotting, saw cutting, replacement with matching roadway materials, fittings, pull wires, duct plugs, caps, terminators, junction boxes, warning tape, backfill, seeding, CR-6, and all labor, materials, equipment, and tools necessary to complete the work for each type of conduit. Payment will also include hauling and disposing of all excavated materials and furnishing, transporting and placing of RC-6 or CR-6 stone backfill.

CATEGORY 800
TRAFFIC

CONCRETE ENCASED PVC SCHEDULE 40 TRAFFIC CONDUIT

DESCRIPTION. This specifications cover the furnishing and installation of all the conduits, fittings pull and junction boxes, conduit expansion joints and incidental parts, necessary to provide for future lighting or operation of structures, The type, size and location of conduits, fittings and boxes will be as indicated on the Plans. The following pertains to work within the City of Baltimore only.

MATERIALS. Refer to Section 805.02 - Electrical Conduit and Fittings.

Duct and fittings shall be UL Approved and Listed and rated for wire temperatures of 90°C. Solvent cement for full round duct and fittings shall be as per duct item manufacturer's printed instructions.

CONSTRUCTION.

General.

1. The size of each conduit shall be such that the sum of the areas of the cross-sections of all conductors, including insulation and protective coverings, shall be not greater than thirty percent (30%) of the inside area of conduit except that no conduit encased in concrete or installed underground shall be less than two inches (2") inside diameter and no conduit small that three quarter inches (3/4") inside diameter shall be used except for fixture hangers.
2. All conduit sizes and conduit layouts shall be approved by the Engineer before installation and the Contractor shall submit data on the lay-out for the exact makeup, overall diameters and cross-sectional areas of the actual conductors he intends to use and the sum of the areas of the conductors in each conduit. All conduits used on a project shall be the product of one manufacturer.
3. Bends shall be of long sweep, free from kinks and of such easy curvature as to permit the drawing in of conductors without injury. The radius of curvature of inner edge of bends shall not be less than ten (10) times the inside diameter of the conduit except as may be otherwise noted on the Plans or in the Special Provisions. Conduits shall not be flattened or distorted. The total angle of all bends between any two (2) boxes, or fittings, shall not exceed two (2) quarter bends.
4. Exposed conduit runs shall be parallel to or at right angles to walls, slabs, girders, etc., and in locations giving greatest accessibility for painting and least accumulation of dirt. All exposed conduit runs shall be attached to steel masonry, concrete or timber by galvanized malleable iron or galvanized steel straps, clamps, or hangers of an approved type, held at not less than two (2) points by galvanized steel bolts or lag screws. The runs shall be supporting members, Conduits mounted o structural steel members shall be securely clamped to prevent rattling and wear.
5. All ends of conduits installed during construction, or for future use shall be closed against the introduction of foreign material by the use of standard pipe or brush caps. All conduits shall be installed so that they will drain and necessary holes for this purpose shall be made as directed.

6. All conduits risers in railing post shall, unless otherwise shown on the Plans, terminate one inch (1") below the top surface of the post. The risers shall be accurately placed so that they may be located for future use.
7. All conduits installed underground shall have a Mix No. 2 Concrete envelope providing cover as indicated by the dimensions shown on the Detail Plates for Standard Duct Sections.
8. All traffic bearing ductwork shall be encased in Mix No. 2 Concrete. Concrete encasement shall be a minimum of 3" in all directions from the ductwork, as per Detail No. BC-824.01, and extend 3 feet from the curb unless otherwise noted in the plans.
9. Excavation for installation and encasement shall be carefully done, sidewalks trimmed to line and the bottom of trench graded so that the envelope will be uniform and there will be no pockets or low points in the conduit run. All backfill, regardless of class shall be carefully tamped to conform to the requirements of Section 204, unless otherwise specified. Care shall be taken that the concrete envelope, or conduit, are not injured.
10. In areas where a concrete footway currently exists, the Contractor shall remove the existing footway as required and excavate a trench of the width and depth as shown on the Detail Plates, or as directed by the Engineer. After the conduit is installed, the Contractor shall install CR-6 to the existing grade to provide a temporary and or permanent concrete footway.
11. All conduits, boxes, etc., to be encased in concrete must be accurately placed and rigidly held in position so that no variation form line or grade occurs when concrete is placed.
12. Conduits, fittings and boxes shall be stored under cover and above ground.
13. Upon completion of the conduit installation, the system shall be cleared by a pull through mandrel type device inserted in the presence of the Engineer before any conductors are installed. Immediately prior to the installation of conductors in any run, the conduits comprising that run shall again be checked. Any and all obstructions shall be removed to the approval of the Engineer.
14. The Contractor shall install and leave in place NO. 10 iron wire in all conduit runs installed for future use.
15. The Contractor shall furnish work drawings. Work drawings shall be twenty-two inches by thirty-six inches (22"x36") and shall be furnished in duplicate for Engineer's preliminary examination. After work drawings have been accepted by the Engineer, and revisions made the Contractor shall furnish additional copies as may be requested.

Polyvinyl Chloride (PVC) Conduits and Fittings.
Conduit shall be cut with a saw and all ends shall be accurately tapered or otherwise finished depending on type of coupling specified. Tools recommended for this work by the conduit manufacturer shall be used and finished ends shall be equal to those supplied by the Manufacturer. All ends shall be smoothed of burrs and fins. Standard bends shall be used wherever possible and special bends shall preferably have a radius not lee than that of standard bends. All special conduits shall be accurately dimensioned and manufactured. All joints shall be sealed with waterproof joint sealing compound recommended by the conduit manufacturer and approved by the City. All joint thus treated shall be waterproof.

1. An expansion joint shall consist of a break in the conduit run with a space between ends of conduit as indicated on the Plans.

2. A conduit sleeve not less than eighteen inches (18") long unless otherwise indicated shall cover the break. The sleeve shall be rigidly anchored to the structure.
3. All underground ductwork shall have magnetically detectable plastic warning tape installed 12" above the duct for the entire length of the duct. The color of the warning tape shall be red for electric ductwork. Provide tape in rolls, 3 inches minimum width with warning and identification imprinted in bold black letters continuously over the entire tape length. Warning and identification shall be "CAUTION BURIED ELECTRIC LINE BELOW" or similar. Use permanent code and letter coloring unaffected by moisture and other substances contained in trench backfill material. Bury tape with printed side up. Three-foot (3') clearances are recommended between lighting conduits and meter vaults.

Inspection and Testing.

1. A braided nylon line, having a minimum tensile strength of four hundred pounds (400 lbs), shall be installed in each duct.
2. Each duct shall be tested in the presence of the Engineer. A test device made from ridged material not more than one-half inch (1/2") smaller than the bore of the duct, and a minimum of two feet (2') long, shall be passed through each duct. The device shall be so constructed as to prevent its use through bends whose radius is less than twenty feet (20'). Any duct through which the device cannot be passed shall be repaired by the Contractor to the satisfaction of the Engineer with no additional compensation from the City.
3. All manholes shall be inspected for proper duct entries, terminators, bell ends, pulling in irons, concrete seal around duct, caps or lugs, pull lines and grout seals between the frame and chimney.

    a. The duct line sizing device is to be used as a "go" gauge for new PVC duct and will be used on the basis of a receipt signed by the Contractor.
    b. Use of the device must be observed by the Engineer. Arrangements are to be made at least three (3) days in advance.
    c. Prior to testing, the Contractor shall assure that the bore of all the ducts are clean and clear of fins, burrs or sharp edges and dry.
    d. The Contractor shall supply labor and equipment necessary to gauge the new duct.
    e. If the device meets any resistance within the run of duct, the operation shall stop and the device recovered as its starting point.
    f. Any duct which has resistance to the passing of the device will not be accepted.
    g. Final acceptance of the conduit system will not be made until completion of all the Work in the Contract including completion of cable Work and viability and continuity of cable service acceptance in the specified duct system.

MEASUREMENT AND PAYMENT. This work will be paid for at the contract unit price bid per linear foot for which price and payment shall be full compensation for all trench excavation, conduit, concrete encasement, core drilling into existing manhole walls, waterproof epoxy, rodding, pavement patching, slotting, saw cutting, replacement with matching roadway materials, fittings, pull wires, duct plugs, caps, terminators, junction boxes, warning tape, backfill, seeding, CR-6, and all labor, materials, equipment, and tools necessary to complete the work for each type of conduit. Payment will also include hauling and disposing of all excavated materials and furnishing, transporting and placing of RC-6 or CR-6 stone backfill.

CATEGORY 800
TRAFFIC

HPS COBRA HEAD LIGHTING FIXTURE, LAMP AND BRACKET ARM

DESCRIPTION. This work involves the furnishing and installing by the Contractor 400-Watt or 250-Watt HPS Cobra Head Lighting Fixture, Lamp and Bracket Arm, as per the Contract Documents or as directed by the Engineer.

MATERIALS. The Contractor shall submit catalog cuts to the DOT Street Lighting Engineering for approvals and receive approvals prior to the installation of this item.

Fixtures. Fixtures shall be suitable for use with a 400-Watt High Pressure Sodium Vapor lamp. Fixture to have glass reflector, type M-N-III light distribution. Provide with detachable ballast door with quick disconnects and a 400-Watt 120/208/277 volt regulator ballast, connected for 120 volts. Provide with a locking type receptacle for photoelectric control and a 2-inch slip fitter. All to be shipped one complete unit per carton.

Auxiliary Equipment. Fixture auxiliary equipment shall be securely attached to unitized tray with variation-proof fasteners and quick disconnects, which shall allow the equipment to be removed, replaced or upgraded without the use of tools. Ballast shall be pre-wired to the lamp holder receptacle, with one (1) ballast operating one (1) High Pressure Sodium lamp. Each ballast shall be of the separate component type cable of providing reliable lamp starting down to minus twenty degrees Fahrenheit (-20F.), shall have power factor better than ninety percent (90%) and shall be of the regulating type providing plus or minus five percent (15%) lamp power regulation with a plus or minus ten percent (10%) variation from rated input voltage. The photocell receptacle shall be pre-wired to the ballast or ballast terminal block. The ballast shall be utility grade having a 10kv B.I.L. rating or higher. A separate polarized, quick disconnect plug shall disconnect all conductors from power source. Component-to-component wiring within the fixture shall carry no more than eighty percent (80%) of rated current and shall be listed by Underwriter's Laboratories for use at 600 VAC at one-hundred five degrees Celsius (105 C) or better. Field wiring terminals shall accept service leads up to AWG No. 6 and shall be listed by Underwriter's Laboratories for use at 600 VAC or higher. Plug disconnects shall be listed by Underwriter's Laboratories for use 600 VAC. All wiring within the pole shall be No. 12 AWG copper wire, installed complete with minimum 3-inch long "pig-tail" lengths furnished and accessible from pole handhole. The hot wire shall be black and the neutral wire shall be white. All hardware shall be Stainless Steel 316 Grade or better, with all exposed hardware of the vandal proof type.

General. Provide factory-fabricated wiring devices, in type and electrical rating for the service indicated.

NEC Compliance. Comply with the National Electrical Code (NFPA Number 70) as applicable to construction and installation of Electrical Wiring Devices.

UL Labels. Provide Electrical Photo controls that have been tested, listed and labeled by Underwriters Laboratories.

N.E.M.A. Compliance. Comply with National Electrical manufacturers Association Standards for general and Specific-Purpose wiring Devices.

Photo Control. Each fixture shall be provided and installed with a photocell. Photo Controls shall operate in a temperature range of minus fifty degrees Centigrade to plus sixty degrees Centigrade (-50C. +60C.). Photo Control shall be factory preset for 'ON' at approximately 2 fc. Provide delay in excess of fifteen (15) seconds to prevent unit from functioning due to sudden brilliant light as from vehicles, lightning, etc. The design of the photo control shall be such that the unit may face any direction without seriously affecting turn-on or reducing the life of the cell.

Bracket Arms. Bracket arms shall be of the type detailed on Detail B.C. 808.04. A single member bracket arm assembly shall be furnished where a six foot (6') or eight foot (8') bracket arm is specified and shall be ovaliptic consisting of tapered tubing made of Aluminum Association Alloy 6063-T6 having an elliptical section at the pole end to two and three-eights inch (2-3/8") OD at the fixture end. The pole end of the arm shall have a cast aluminum fitted weld to it, which will permit the positioning of the arm on the plats of the pole, held only by gravity, while the arm is secured to the sole by stainless steel cap screws, providing a weather-resistant connection and a smooth wiring raceway. If single mast arms are used, a cover plate with bolts for each pole bottom bracket attachment should be furnished. When a ten foot (10') bracket arm is specified, an "A" Frame bracket arm shall be furnished and shall be constructed of 0.188" thick Aluminum Association Alloy 6063-T6 having a two and three-eights inch (2-3/8") OD at the fixture end. The pole end of the arm shall have a cast aluminum fitted weld to it, which will permit the positioning of the arm on the plats of the pole, held only by gravity, while the arm is secured to the sole by stainless steel cap screws, providing a weather-resistant connection and a smooth wiring raceway.

Arm Plate Construction. Refer to detail on Detail B.C. 808.14.

Finishes. All hardware (nuts, bolts and washers), except anchor bolts shall be stainless steel. Pole shafts and bracket arms shall have a satin brush finish producing a non-reflecting outer surface. Anchor bases, pole caps and nut covers shall have a wet blast silver gray satin finish. Pole shafts and bracket arm assemblies shall be tire-wrapped with a heavy water resistant paper or other approved method for protection of finish during shipment or installation.

Welding. All welding shall conform to the approved and accepted method of welding for aluminum alloys. Welding shall be done only by welders certified by the Independent Testing Laboratory to the requirements of the latest edition of ASTM Boiler and Pressure Vessel code, Section IX and their credentials shall be made available to the Engineer upon request.

Tests. Aluminum light poles and brackets shall conform to "NEMA TEST REQUIEMENTS FOR METALS". Each aluminum light pole shall be capable of withstanding a five hundred (500) pound transverse load applied eighteen inches (18") from the top of shaft without fracture

and with maximum deflection of not more than seven point five percent (7.5%) of shaft length. After removal of the load, the shaft shall have taken a permanent set of not more than one-half inch (1/2"). Each anchor base shall be capable of withstanding the maximum allowable bending movement of the shaft. Each bracket arm, when attached to the shaft, shall withstand a vertical load of one-hundred (100) pounds and a transverse load of fifty (50) pounds, applied at the fixture end of the bracket arm without fracture of apparent deformation after the load is removed.

CONSTRUCTION. Install all associated equipment and incidentals required to properly accomplish this item of work. The electrical power distribution system will be the responsibility of Baltimore Gas and Electric.

Bracket arms shall be perpendicular to the roadway centerline. Exercise extreme care in handling and erecting poles with attached fixtures so as to avoid damage thereto, the Contractor being totally responsible for any and all damages to poles/fixtures.

Pole shafts and bracket arm assemblies shall be wrapped with a heavy water resistant paper or approved method for protection of finish during shipment and installation.

Install lighting fixtures of the types indicated where shown on the plans; in accordance with the Fixture Manufacturer's Written Instructions and with recognized industry practices; to ensure that the fixtures comply with the requirements and serve the intended purposes. Comply with N.E.M.A. Standards and Requirements of the National Electrical code pertaining to installing of lighting fixtures and with applicable portions to N.E.C.A. Standard of Installation.

Performance Test. After the Contractor installs and wires the light poles, BGE will install the fuse kits and energize the pole. The Contractor shall be responsible for maintaining the lights for the entire warranty period of the contract. This will constitute the operational and burn test. The Contractor shall repair or replace any defective part within three days of notification from the City that a streetlight has failed.

Wiring. The Contractor will be responsible for providing 2-1 conductor # 12 AWG T ype THWN conductors plus one # 12 ground, 6 feet beyond the pole hand hole for each light fixture, this item in incidental to the lighting fixture

MEASUREMENT AND PAYMENT. This work will be measured and paid for at the Contract unit price per each. The payment will be full compensation for all mounting hardware, arm plate, bracket arms, fixtures, lamps, ballasts, photocell, internal lamp wiring, external wiring, performance tests, welding and all labor, materials, accessories, equipment, tools and incidentals necessary to complete the work.

CATEGORY 800
TRAFFIC

DECORATIVE HOMELAND PEDESTRIAN LIGHING POLE, 150-WATT HPS VICTORIAN FIXTURE, LAMP AND PHOTOCELL

DESCRIPTION. This work shall consist of furnishing and installing by the Contractor, decorative Homeland pedestrian lighting pole, 150-Watt high-pressure sodium Victorian fixture, lamp and photocell per the typical detail drawings in the Contact Documents.

MATERIALS.
The Contractor shall submit catalog cuts to the DOT Lighting Engineering for approvals and receive approvals prior to the installation of this item.

Light Poles: Decorative Homeland Light Pole.

Internal electrical wiring for lamp and fixture with all necessary internal wiring.

Fixtures: Baltimore Victorian fixture with 150-Watt HPS lamp and photocell.

CONSTRUCTION.

A. Install light poles complete, including poles, fixtures, lamps, photocells, parts, accessories, and all associated equipment and incidentals required to properly accomplish this item of work.

B. Light poles shall be erected plumb, and placed on anchor bolts projecting from roadway and structure pedestal bases. Utilize stainless steel shims to ensure plumbness for poles at sidewalks and or wall-mounted locations. Exercise extreme care in handling and erecting poles with attached fixtures so as to avoid damage thereto, the Contractor being totally responsible for any and all damages to poles/fixtures. Each pole shall be installed with a neoprene gasket between the pole and the base.

C. The Contractor shall be responsible for installing new ballasts and fixtures, verifying the proper working operation of the fixtures (including night-time testing as directed by the Engineer), and all equipment and incidentals necessary to complete this item of work.

All wiring within the pole shall be No. 12 AWG copper wire, installed complete with minimum 3-inch long "pig-tail" lengths furnished and accessible from pole handhole. The hot wire shall be black and the neutral wire shall be white.

Performance Test

After the Contractor installs and wires the light poles, BGE will install the fuse kits and energize the pole. The Contractor shall be responsible for maintaining the lights for the entire warranty period of the contract. This will constitute the operational and burn test. The Contractor shall repair or replace any defective part within three days of notification from the City that a streetlight has failed.

MEASUREMENT AND PAYMENT. Measurement for Decorative Homeland Pedestrian Lighting Pole, 150-Watt HPS Victorian Fixture, Lamp and Photocell will be a per each basis, and the quantity to be measured will be the number of complete assemblies furnished and installed and accepted by the Engineer.

Payment for Decorative Homeland Pedestrian Lighting Pole, 150-Watt HPS Victorian Fixture, Lamp and Photocell will be at the unit price bid in the proposal, for which price and payment shall be full compensation for all poles, fixtures, lamps, internal electrical wiring multivolt ballasts, photocells, base covers, accessories and mounting hardware, bearing pads, performance tests, all internal wiring and all labor, materials, equipment, tools and incidentals necessary to complete the work.

CATEGORY 800
TRAFFIC

30 FOOT ROUND ALUMINUM LIGHTING POLE

DESCRIPTION. This work involves the furnishing and installing by the Contractor, 30-Foot Round Aluminum Pole per the Contract Documents.

MATERIALS.
The Contractor shall submit catalog cuts to the DOT Street Lighting Engineering for approvals and receive approvals prior to the installation of this item.

Base Plate and Bolt Cover – Refer to Detail B.C. 808.15, Sheets 1 and 2.

Light Poles: Aluminum light poles shall be twenty-seven feet, six inches (27'6") long, round tapered aluminum pole per Detail BC 808.02 and including the following:

Shafts – Shafts may be either spun aluminum or cold rolled aluminum at the option of the Contractor and shall conform to the following:

Spun aluminum shafts shall be formed from one-piece of seamless tubing, Aluminum Association Alloy 6063, or equal, and after fabrication it shall have no longitudinal or circumferential welds, except at the lover and joining the shaft to the base. Shafts for thirty foot (30') light poles shall have a wall thickness of 0.1888-Inches. All shafts shall contain a four-inch by eight-inch (4"x8") flush type hand-hole with cover held in place with stainless steel tamper proof screws. After welding, the shaft shall be artificially aged by best treating to a T6 temper. All other shaft dimensions shall be as specified herein and/or as shown on the plans. A suitable adapter or grommet shall be equipped with a removable cast aluminum ornamental cap secured in-place with stainless steel set screws. Pole cap and anchor bolt covers shall be made of Aluminum Association Alloy 43.

Cold-Rolled aluminum shafts shall be fabricated from one-piece of sheet or plate of Aluminum Association Alloy 5052, or equal, and shall have diameters and wall thickness as specified above for spun aluminum shafts. Each shaft will have one (1) longitudinal weld performed by the Metallic-Arc-Consumable-Electrode-Inert-Gas Shielded process. After welding, the shaft shall be longitudinally cold-rolled to the desired shape to develop the mechanical properties listed for H-34 tamper. The shaft shall have no circumferential welds, except at the lower end joining the shaft to the base. In all other respects, the cold-rolled aluminum shafts shall be the same as specified above for spun aluminum shafts.

CONSTRUCTION. Install light poles complete, including parts, accessories, and all associated equipment and incidentals required to properly accomplish this item of work. Underground cabling and connections, controls, and the electrical power distribution system will be the responsibility of Baltimore Gas and Electric.

Light poles shall be erected plumb, with bracket arms perpendicular to roadway centerline, and placed on anchor bolts projecting from roadway and structure pedestal bases. Utilize stainless steel shims to ensure plumbness for poles at sidewalks. Exercise extreme care in handling and erecting poles with attached fixtures so as to avoid damage thereto, the Contractor being totally responsible for any and all damages to poles/fixtures. Each pole shall be installed with a neoprene gasket between the pole and the base.

MEASUREMENT AND PAYMENT. 30 Foot Round Aluminum Lighting Pole will be measurement and paid for at the Contract unit price per each. The payment will be full compensation for all poles, mounting hardware, transformer bases, base plate, base cover, handhole, grounding lug, arm plate, internal lamp wiring, welding and all labor, materials, accessories, equipment, tools and incidentals necessary to complete the work.

CATAGORY 800
TRAFFIC

SECTION 810 ELECTRICAL CABLE, WIRE, AND CONNECTORS

810.01 DESCRIPTION
ADD: The following:

This work shall also include splicing and termination of copper cables.

810.02 MATERIAL
ADD: The following:
Twisted pair communications cable will meet IMSA specification 20-2 and be American Wire Gauge 19.

810.03 CONSTRUCTION

810.03.06 LOOP DETECTOR WIRE AND LOOP DETECTOR LEAD-IN
ADD: The following:

Splices will be made only after the loop is tested and the results indicate a resistance reading above 100 meg Ohm. The splice will be properly insulated and encapsulated in an epoxy style 3M splice case. The Proposed splice case will be submitted for approval.

Twenty-four (24) hours after the splice has cured, the loop lead-in wire, splice, and the loop in the street will be re-tested as a unit and must exceed a resistance of 100 meg ohms.

All splice connections shall be soldered and the shield carried thru each splice. Shielding shall only be connected to ground at each enclosure on the source end cable.

ADD: The following sub-section:

810.03.10 REPLACEMENT OF EXISTING COMMUNICATION CABLE. This contract will require the removal and replacement of sections of the existing twisted pair copper communication cables in kind or as otherwise directed by the Engineer, installed underground or overhead as per the Contract Documents and as directed by the Engineer. The Contractor will be utilizing the ducts and conduits already assigned and occupied by the Traffic Divisions copper cable network. Permanent underground or above ground splices will not be allowed.

In the event the Contractor is not able to locate the existing communication cable, continue to follow an existing cable or is not able to locate a duct listed for use in a reasonable amount of time the Contractor shall stop work and request the assistance of the City signal shop, who will dispatch personnel when available to assist in locating the cable or duct.

This work must be coordinated with the Engineer to accommodate special events that require the use of existing copper cables to activate traffic signal patterns. Work schedules must be coordinated and approved by the Engineer for critical cable replacements.

Communication cable will be tested prior to installation on the factory reel and again after installation. All testing will be witnessed by the Project Engineer or his designated representative using a **time-domain reflectometer** (TDR). The contractor will provide written test procedures indicating the methods and equipment to be used and the expected acceptable results.

Any cable not meeting the established acceptable minimum requirements will be removed or repaired by the contractor using methods submitted by the contractor and approved by the Project Engineer and re-tested.

810.04 MEASUREMENT AND PAYMENT
ADD: The following:

810.04.01 The price for communication cable shall include all tools, labor, material and equipment to install, rack, coil, label, test and provide test results in written form to the Project Engineer for approval. When communication cable is being replaced, the cost to remove the existing communication cable will be incidental to the cost of the new cable.

DELETE: 810.04.02 in its entirety

ADD: The following:

810.04.02 Splicing and splice kits are incidental to the loop wire.

CATEGORY 800

TRAFFIC

TRAFFIC HANDBOX WITH DTT COVER AND LIGHTING HANDBOX WITH DPW COVER

DELETE: SECTION 811— ELECTRICAL HAND HOLES, MANHOLES, PULL AND JUNCTION BOXES in its entirely.

INSERT: The following.

SECTION 811—HANDBOX CONDUIT

811.01 DESCRIPTION

This work shall consist of furnishing and installing Hand Boxes for street lighting (DPW Cover) and traffic control devices (DTT Cover) as specified in the contract documents or as directed by Engineer. Included also is the removal of boxes in their entirety and the plugging of ducts, the extending of ducts through the void area utilizing split duct and fittings, and replacement of boxes utilizing split sweeps and fittings.

811.02 MATERIALS

INSERT: The following.

Handbox Base: Mix No. 3 Concrete (902.1), as per detail BC 804.01.

Cylindrical Box Section: Mix No. 3 Concrete (902.1), Wire Mesh Reinforced, as per detail BC804.02.

Frame and Cover: Cast Iron and Cast Steel, respectively, as per details BC 804.03 through 804.09. Covers for electric service shall read "DPW CONDUIT". Covers for traffic signals shall read "DTT CONDUIT".

Ground Rod: Solid, steel, ¾" diameter x 10' length, with rod copper-jacketed, UL Approved and Listed.

Cement Mortar: As per Section 903.

Split Duct and Fittings: As per Section 805 noted herein.

811.03 CONSTRUCTION

INSERT: The following.

Excavate, install ground rod, and place base slab to proper grade; install cylindrical box section, mortaring box to base. Cement mortar seal all annular openings in base and box that have been formed for duct entrance/exit.

Set handbox frames and covers to sidewalk and planter finished grade, utilize cement mortar during setting operations.

Perform backfilling/compacting operations when directed by the Engineer.

Where a new hand box is to be connected to an existing duct bank, the Engineer will determine the exact duct to be connected to.

Contact Baltimore City Conduit Maintenance Section through the Engineer and request their presence at the site for technical advice regarding proposed work operations.

All existing handbox frames and covers removed from the site are to be transorted/deliver to the Leadenhall Street Maintenance Yard, 1400 Leadenhall Street, Baltimore, MD 21201.

Where existing handboxes are to be removed and not replaced, existing duct slated to remain in service shall be extended through the void area as applicable, utilizing split duct and fittings, all encased, in a manner acceptable to the Engineering subsequent to which the void shall be backfilled/compacted. Split duct/sweeps and fittings through handbox void areas and the replacement of handboxes shall, in these instances, be furnished and installed by the Contractor. Where existing duct are slated to be abandoned, their open ends shall be closed-off with a minimum 8" thick concrete or brick masonry bulkhead prior to backfilling void resulting from handbox removal.

Install handbox covers "DPW CONDUIT" or "DTT CONDUIT", as per Contract Plans.

Completed handbox installation shall be as per detail BC 804.01.

811.04 MEASUREMENT AND PAYMENT

INSERT: The following.

Measurement of "Traffic Handbox with DTT Cover" and "Lighting Handbox with DPW Cover" items will be made on a per each basis, for installation complete, and the quantity to be measured will be the number of handboxes of each item installed or adjusted and accepted by the Engineer.

Payment for "Traffic Handbox with DTT Cover" and "Lighting Handbox with DPW Cover" will be made at the contract unit price bid per each, which price and payment shall include all backfill, ground rods, poured concrete bases, boxes, and frames and covers, mortaring, removal and disposal of existing handboxes, modify duct runs, and all labor, materials, equipment, tools and incidentals necessary to complete these items of work. All labor and materials required to divert a duct into the hand box, including rodding as necessary and installing pull rope, duct

plugs, all bases, boxes, frames, covers, duct penetration as required, operation keys, mortaring removal and disposal of material shall be considered incidental to the cost of the hand box. No additional compensation will be made if the duct is diverted each way into the hand box. No payment will be made until the hand box is inspected and accepted as complete.

CATEGORY 800
TRAFFIC

STANDARD PRECAST COLLECTOR HAND BOX

DESCRIPTION. This section specifies the installation of standard precast collector hand boxes for traffic control devices.

MATERIALS.

A. Hand boxes; including, Precast Box, and Frame and Cover: as per Details included in the Contract Documents and referenced thereon.

B. Duct, Encasing Concrete, and Pull-Lines: as per Section titled "Concrete Encased DB-120 Lighting Conduit".

C. Backfill: Borrow Excavation Type III Material.

D. Ground Rods – Section 804.

CONSTRUCTION. Each hand box shall be installed complete, with a base and ground rod. When a hand box is to be installed on an existing duct system, the Contractor shall rod the assigned duct to the nearest hand box or manhole. Should the assigned duct prove to be obstructed, another duct is to be rodded until a clear duct is found. The Contractor shall install an approved pull rope in the diverted duct from the nearest manhole or hand box to the new hand box. All ducts are to be plugged immediately after construction with approved plugs. In the event a duct must be diverted each way into the hand box, each leg of the diversion shall be rodded to the nearest manhole or hand box and a pull rope installed in each leg of the run.

A. Excavate for and place base slab to proper grade; install precast box section, mortaring box to base. Cement mortar seal all "overbreak" openings in base and box that have been formed for duct entrance/exit.

B. Set frame and cover to finished project grade, utilize cement mortar during setting operations.

C. Perform backfilling/compacting operations when directed by the Engineer.

D. Where a new hand box is to be connected to an existing duct bank, the Engineer will, unless shown on the Contract Plans, determine the exact duct to be connected to.

MEASUREMENT AND PAYMENT. Standard Precast Collector Hand Box will be measured and paid for at the Contract unit price per each. The payment will be full compensation for all hand boxes installed complete and accepted by the Engineer. Compensation will be for installed hand box, cover, backfill, concrete base, ground rod and all labor, materials, equipment, tools and incidentals necessary to complete the work. All labor and materials required to divert a duct

into the hand box, including rodding as necessary and installing pull rope, duct plugs, all bases, boxes, frames, covers, duct penetration as required, mortaring removal and disposal of material shall be considered incidental to the cost of the hand box. No additional compensation will be made if the duct is diverted each way into the hand box. No payment will be made until the hand box is inspected and accepted as complete.

CATEGORY 800
TRAFFIC

GROUND MOUNTED SIGN SUPPORT

DESCRIPTION. This work shall consist of furnishing and erecting sign supports for traffic signs. The location and type of sign support shall be specified in the Contract Documents or as directed by the Engineer.

MATERIALS. U-Channel posts shall be hot rolled flanged channels produced from high strength rail steel according to ASTM A 499-81, Grade 60.

Posts shall be finished as follows:

1. Hot rolled channel shall be galvanized per ASTM A 123.
2. Weight - The weight of the signpost before holes are punched shall be 2.00, 2.50, 3.00, and 4.00 lbs./ft. as required. The weight tolerance shall be plus or minus 3.5 percent.
3. Punching - Punching shall be full-length 0.375-inch diameter holes on 1.00-inch centers. First hole to be 1.00 inch from top of post and bottom pointed.
4. Fabrication - The finished post shall be machine straightened and have a smooth uniform finish, free from injurious defects affecting their strength, durability or appearance. Boltholes shall be carefully spaced vertically and horizontally. All holes and sheared ends shall be commercially free from burrs.

Concrete shall be Mix No. 2. Concrete reinforcing shall meet the requirements of ASTM: A615, Grade 40.

CONSTRUCTION. U-Channel posts sign supports shall be installed as indicated in the Contract Plans or as directed by the Engineer. See detail for sign post support in this book of specifications.

METHOD AND PAYMENT. This item will be measured on the basis of the length of sign support satisfactorily installed. Sign supports will be paid for at the Contract unit price per linear foot of support along with their foundations satisfactorily installed, which price and payment will be full compensation for coring of existing sidewalk, sleeves, mortar setting, concrete, reinforcing steel, locating and protecting existing utilities, and for all materials, labor, equipment, tools, and incidentals necessary to complete the work.

CATEGORY 800
TRAFFIC

BAND SIGN TO SUPPORT

DESCRIPTION. This work shall consist of furnishing required hardware and banding signs to supports at locations specified in the Contract Documents or as directed by the Engineer.

MATERIALS. 3/4 Inch Stainless Steel Banding

Stainless Steel Banding Clips

CONSTRUCTION. Signs shall be banded to supports as indicated in the Contract Plans or as directed by the Engineer.

METHOD AND PAYMENT. Band Sign to Support will be measured and paid for at the Contract unit price per each sign which is banded to a support and accepted by the Engineer, which price and payment will be full compensation for all hardware, materials, labor, equipment, tools, and incidentals necessary to complete the work.

CATEGORY 800
TRAFFIC

SECTION 813 SIGNS

813.02 MATERIALS

DELETE: The following.

Provide all hardware not provided by the Administration. Hardware shall be stainless steel. The Administration will supply traffic signal related signs and their mounting hardware for span wire, mast arm, and signal pole mounted applications.

813.04 MEASUREMENT AND PAYMENT

DELETE: The following.

Administration furnished signs and mounting hardware will be measured and paid for at the Contract unit price per square foot for the completed sign installed. The payment will be full compensation for all transportation, drilling holes as specified, installation, and for all material, labor, equipment, tools, and incidentals necessary to complete the work.

INSERT: The following.

Traffic Signal Signs will be measured and paid for at the Contract unit price per square foot for the completed sign installed. The payment will be full compensation for mounting hardware, all transportation, drilling holes as specified, installation, and for all material, labor, equipment, tools, and incidentals necessary to complete the work.

CATEGORY 800
TRAFFIC

SECTION 814 - SIGNAL HEADS

DELETE: SECTION 814 – SIGNAL HEADS in its entirety.

INSERT: The following.

814.01 DESCRIPTION. Furnish and install vehicle traffic control signal heads and pedestrian traffic control signal heads, including associated housings, light emitting diode (LED) modules, mounting hardware, back plates and visors. The signal heads shall conform to the latest Institute of Transportation Engineers (ITE) Vehicle Traffic Control Signal Head (VTCSH) Specification. The LED Pedestrian Traffic Signal Countdown Timer Modules shall conform to the most recent, formally-adopted version of the Institute of Transportation Engineers (ITE) specification titled "Pedestrian Traffic Control Signal Indications (PTSCI) - Part 2: Light Emitting Diode (LED) Pedestrian Traffic Signal Modules." The Contractor is required to provide laboratory certification for compliance with the latest ITE specifications. The signal shall employ a lens assembly that presents an appearance that is similar to those found on standard incandescent signals.

Manufacturers of Red and Green 8 inch and 12 inch LED traffic signal modules are required to file a statement with the Maryland Energy Administration, certifying that each signal to be sold or offered for sale in Maryland is in compliance with the State's energy efficiency standard. Information on this requirement can be found at the Maryland Energy Administration's website.

814.02 MATERIALS.

814.02.01 Vehicular Traffic Signal Housing. Traffic signal sections shall be painted before assembly. All housings to be supplied under this specification are to be a one piece corrosion resistant aluminum alloy die-casting. Polycarbonate signal assemblies are not acceptable under terms of this specification.

1. All materials shall be clean, smooth, and free from flaws, cracks, blowholes, and other imperfections.
2. All metallic signal hardware shall be stainless steel material (10-8 Type 304).
3. Vehicular signal sections shall be capable of mating to another vehicular signal section from either the top or bottom of each housing.
4. All hardware furnished shall be installed on the corresponding fitting and threaded component.

814.02.02 Vehicular Traffic Signal LED Modules. Light Emitting Diode (LED) modules shall be used in place of the incandescent lamp, reflector, socket, gasket and lens assembly of the vehicle signal sections. Each Light Emitting Diode (LED) module shall consist of an assembly

that utilizes LEDs as the light source in lieu of an incandescent lamp for use in vehicle signal sections.

1. All vehicle signal LED modules shall be engineered to fit into all ITE compliant conventional vehicle signal housings.
2. LED signal modules shall utilize the same mounting hardware used to secure a standard incandescent lens and gasket assembly, and shall only require a screwdriver or basic installation tools to complete the mounting.
3. Each LED module shall be rated for a minimum useful life of sixty (60) months. All LED modules shall meet all parameters of this specification during this period.
4. Each LED module shall be a single, self-contained sealed unit, not requiring on-site assembly for installation into existing traffic signal housing.
5. Materials used for the lens and signal module shall conform to the appropriate ASTM specifications for the materials.
6. Enclosures containing either the power supply or electronic components of the signal module shall be made of UL94 flame retardant materials. The module lens does not need to conform to this requirement.
7. Each "red ball" and "green ball" LED module shall be in full compliance with all provisions of the July, 1998 Institute of Transportation Engineers (ITE) Interim LED Purchase Specification, Vehicle Traffic Control Signal Heads, Part 2, or latest formally adopted revision thereof.
8. The advertising date of the Contract associated with this specification shall be used to determine the date of the applicable standards.
9. LED modules shall meet all manufacturers' recommendations for use in an optically programmed vehicle traffic signal.
10. Optically Programmable Module lens and LED lamp shells shall be constructed from UV stabilized polycarbonate.
11. Optically Programmable Module LED signal modules shall fit in a PAR-56 (3-prong) socket and utilize the same mounting hardware used to secure a standard incandescent lens and gasket assembly, and shall only require a screwdriver or basic installation tools to complete the mounting.

814.02.03 Vehicular Traffic Signal Electrical Requirements. The LEDs utilized in the modules shall be AlInGaP technology for red and yellow indications and InGaN for green indications. The LEDs shall be the ultra bright type rated for 100,000 hours of continuous operation from -40° C to +74° C. Each LED shall be capable of being driven continuously at 350 ma minimum and have a minimum power dissipation rating of 1 Watt. Each LED in the light engine shall incorporate an integral metal or metal-ceramic alloy heat sink to cool its semiconductor junction.

814.02.04 Power Consumption. All LED modules except yellow modules shall be U.S. EPA Energy Star compliant at 25° C. Power consumption of these LED modules shall not exceed the maximum allowed by the EPA. The maximum power consumption requirements measured in watts at 120 VAC for each module shall be as follows:

MODULE	MAXIMUM WATTAGE (at 74° C)	NOMINAL WATTAGE (at 25° C)
12 Inch Red Ball	17 W	11 W
12 Inch Yellow Ball	15 W	15 W
12 Inch Green Ball	15 W	15 W
12 Inch Red Arrow	12 W	9 W
12 Inch Yellow Arrow	11 W	11 W
12 Inch Green Arrow	11 W	11 W

814.02.05 Operating Voltage.

1. Each module shall operate from a 60HZ±3HZ AC line over a voltage ranging from 80 volts to 135 volts. Fluctuations of line voltage shall have no visible effect upon the luminous intensity of the indications.
2. The operating voltage of the modules shall be 120 Volts AC. All operating parameters shall be measured at this voltage.
3. LED circuitry shall prevent perceptible flicker to the unaided eye over the 80 to 135 voltage range.
4. The LED module shall have a power factor of 0.90 or greater at a nominal rated voltage at 25° C after 60 minutes of operation.
5. Total harmonic distortion (current voltage) induced into an AC power line by an LED signal shall be less than 20 percent at the rated voltage at 25° C.
6. The signal module on-board circuitry shall include voltage surge protection to withstand high-repetition and low repetition high energy noise transients as stated in Section 2.1.6 and Section 2.1.8 of the NEMA Standard TS-2 dated 1992. The module shall include fusing with a rating of 2 amps or less to protect against sustained over-currents.
7. Each LED module and associated on-board circuitry shall be in compliance with Federal Communications Commission (FCC) noise regulations and must meet FCC Title 47, Subpart B, Section 15 regulations concerning the emission of electronic noise.
8. All wiring and terminal blocks must meet the requirements of Section 13.02 of the ITE Publication: Equipment and Material Standards, Chapter 2, and Vehicular Traffic Control Signal Heads.
9. Each LED module shall be operationally compatible with controller assemblies and all peripheral equipment including but not limited to, electro-mechanical relays, solid state load switches, flashers, conflict-voltage monitors and malfunction management units currently used in the City of Baltimore, Maryland. Current controller specifications are available for review at the specific request of the contractor or vendor.
10. When a current of 20mA AC or less is applied to the unit, the voltage read across the two leads shall be 15 VAC or less.
11. Each LED module shall feature control circuitry to prevent current flow through the LED module in the off state to avoid any false indication as may be perceived by human eye during daylight and evening hours.
12. Voltage turn off shall be per NEMA TS-2 Standard. There shall be no visible illumination from the module when the applied voltage is less than 35 VAC RMS.

13. Each module shall reach 90% of its full illumination within 75 milliseconds of the application of the nominal operating voltage. The modules shall not have any visible illumination after 75 milliseconds of the removal of the nominal operating voltage.
14. Two secured, color coded, 600 V, anti-capillary 18 AWG minimum jacketed wires conforming to the National Electrical Code, rated for service at +105° C, are to be provided for electrical connections for each LED signal module. The two wire leads shall be separate at the point at which they leave the LED module. Refer to sub-section **4** of **LED Module Assembly** in this specification for specified color coding requirements.

814.02.06 Environmental Requirements.

1. Each LED module shall be rated for use in operating temperatures in the range of -40°C (-40°F) to +74°C (+165°F). Each LED module shall meet all specifications throughout this temperature range.
2. Each LED module shall be protected against dust and moisture intrusion in conformance with NEMA Moisture Resistant Standard 250-1991 for Type 4 enclosures to protect all internal components.

814.02.07 Optically Programmed Signals. Optically Programmed Vehicle Traffic Control Signal Heads shall permit the visibility zone of the indication to be determined optically. Each section of the signal head shall utilize an LED module consisting of an assembly that utilizes LEDs as the light source in lieu of an incandescent lamp. To ensure full interoperability, the dimming option and its resistor must be disconnected before turning on the LED lamp.

814.02.08 Lamp Fixture.

1. Lamp fixtures shall be comprised of a separately accessible housing and integral lamp support, indexed ceramic socket, and self-aligning and quick release lamp retainer. Electrical connection between case and lamp housing shall be accomplished with an interlock assembly that disconnects the lamp holder when opened.
2. The lamp socket shall be a PAR-56 (3-prong) socket manufactured to withstand high temperatures created by the lamp.
3. The lamp shall be secured with a wire ring and spring load clip to permit changing the lamp without the use of tools.
4. Wiring insulation shall be 16 AWG and conform to a conductor rating of 200° C.

814.02.09 Pedestrian Signal General. This specification describes the minimum design and operating requirements for pedestrian signal housing assemblies, painted before assembly. 16 inch by 18 inch signals are covered in this specification. All housings to be supplied under this specification are to be a one piece corrosion resistant aluminum alloy die-casting. Polycarbonate signal assemblies are not acceptable under terms of this specification.

1. All materials shall be clean, smooth, and free from flaws, cracks, blowholes, and other imperfections.
2. All metallic signal hardware shall be stainless steel material (10-8 Type 304).
3. All hardware furnished shall be installed on the corresponding fitting and threaded component.

814.02.10 Pedestrian Signal Modules. This specification describes the minimum acceptable design and operating requirements for LED Pedestrian Traffic Signal Countdown Timer Modules. The specific items covered under this specification include "16 inch by 18 inch Combination LED Pedestrian Signal Modules with Countdown Timer" and "12 inch by 12 inch LED Countdown Module."

5. The 12 inch by 12 inch LED Countdown Module (hereafter called module or modules) shall be designed as a retrofit replacement for existing signal lamps. The LED modules are to be used in place of the incandescent lamp, reflector, socket and lens assembly of the pedestrian signal sections manufactured in accordance with the ITE PTCSI Standard, March 1985, without modification to the housing. This Unit shall consist of the Countdown Timer Only in a single Sealed Moisture Resistant Enclosure.
6. The 16 inch by 18 inch Combination LED Pedestrian Signal Modules with Countdown Timer (hereafter called module or modules) shall be designed for retrofit and new-build applications in existing and new 16 inch by 18 inch pedestrian signal housings built to ITE PTCSI Standard, March 1985, without modification to the housing. This unit shall consist of the Hand/Man Pedestrian Signal and the Countdown timer in a single Sealed Moisture Resistant Enclosure.
7. LED signal modules shall utilize the same mounting hardware used to secure a standard incandescent lens, gasket and reflector assembly, and shall only require a screwdriver or basic installation tools to complete the mounting.
8. Materials used for the lens and signal module shall conform to the appropriate ASTM specifications for the materials.
9. Enclosures containing either the power supply or electronic components of the signal module shall be made of UL94 flame retardant materials. The module lens does not need to conform to this requirement.

814.02.11 Pedestrian Traffic Signals Electrical

1. The signal shall provide a power factor of 0.90 or greater when operated at nominal operating voltage and 25 ° C, after 60 minutes of operation.
2. The Total Harmonic Distortion induced into an AC power line by the LED signal module shall not exceed 20%, when operated at nominal operating voltage and at an ambient temperature of 25°C.
3. The on-board circuitry shall meet FCC title 47, Sub-Part B, Section 15 regulations concerning the emission of electronic noise.
4. Hand LED modules shall utilize AlInGaP technology exclusively, either AS (Absorbing Substrate) or TS (Transparent Substrate), and shall not exhibit degradation of more than 30% of the initial light intensity following accelerated life testing (operating at 85 Degrees C and 85% humidity for 1000 hours). AIGaAs technology shall not be acceptable. Walking person LED modules shall utilize InGaN technology exclusively.
5. The LED modules shall be connected directly to line voltage, 120 Volts AC nominal, and shall be able to operate over the voltage range of 80 VAC to 135 VAC.

6. The drive circuitry shall include voltage surge protection to withstand high-repetition noise transients and low-repetition high-energy transients as stated in section 2.1.6, NEMA Standard TS-2, 1992.
7. The typical power consumption for the Hand shall be 6W, the typical power consumption for the Person shall be 6W, and the typical power consumption for the countdown shall be 5W.
8. The circuitry shall ensure compatibility and proper triggering and operation of load switches and conflict monitors in signal controllers currently in use by the procuring traffic authority.
9. The pedestrian countdown signal shall not be illuminated by input signals under 35 VAC.
10. The "countdown" portion of the signal shall have a high "off state" input impedance so as not to provide a load indication to conflict monitors and interfere with the monitoring of the pedestrian signals. The input impedance of the countdown circuitry shall maintain a voltage reading above 25 VAC to the conflict monitor for a minimum of 4 units connected on the same channel.
11. The countdown signal drive circuitry shall not be damaged when subjected to defective load switches providing a half wave signal output.
12. The turn-on/turn-off time for the Hand/Person shall be 75ms or less.

814.03 CONSTRUCTION.

814.03.01 Housing

1. All housings to be supplied under this specification are to be a one piece corrosion resistant aluminum alloy die-casting conforming to the latest ITE VTCSH specification alloy and tensile requirements, having smooth, accurate surfaces and edges.
2. Two integrally cast hinge lugs shall be on to the left of each section and one screw lug shall be cast into the right of each section for 8 inch heads, two lugs for 12 inch heads.
3. The top and bottom of the housing shall have an opening to accommodate one (1) standard 1.5 inch pipe bracket.
4. Each signal section shall be rigidly attached, one above the other, by means of stainless steel bolts and attaching washers in such a manner that any section may be rotated about a vertical axis and oriented at any angle with respect to an adjacent section.
5. Each section shall be indexed by means of mating bosses and recesses to provide positive alignment.
6. The bottom opening of the signal housing shall have a Shurlock boss integrally cast into the housing. The dimensions of the Shurlock boss shall be as follows:
    a. Outside diameter - 2.625 inches
    b. Inside diameter - 1.969 inches
    c. Number of teeth - 72
    d. Angle of teeth - 90°
    e. Depth of teeth - 1/13 inch
7. The teeth shall be clean and sharp and provide full engagement. The radial angular grooves of the Shurlock boss, when used with Shurlock fittings, shall provide positive positioning of the entire signal to eliminate rotation of misalignment of the signal.

8. The opening at the top of the signal head shall be made with two indentations designed to receive a Shurlock ring which will provide positive positioning of the head when mounted from a mast arm or span wire hanger.

814.03.02 Housing Door

1. The housing door of each signal section shall be a one piece corrosion resistant aluminum alloy die-casting.
2. The door shall be attached to the housing by means of two stainless steel hinge pins. A stainless steel latch screw and wing nut on the right side of the housing shall provide for opening and closing the signal door without the use of any special tools.
3. A gasket groove on the inside of the door shall accommodate a weather proof and mildew proof Ethylene Propylene Diene Monomer (EPDM) gasket. The gasket shall be installed on each door. When the door is closed it shall seal against a raised bead on housing making a positive weatherproof and dust proof seal. The outer face of the door shall have four tapped holes equally spaced about the circumference of the lens opening with four stainless steel screws to accommodate the signal head visors.

814.03.03 Visor

1. The Visor shall be full tunnel, fabricated from 0.050 inch 3105-H25 sheet aluminum alloy and be powder coated as described separately below.
2. 8 inch signal's visor shall have a nominal length of 9 inches.
3. 12 inch signal's visor shall have a nominal length of 11 inches.
4. Axis of visor shall be not less than 3 degrees or more than 3.5 degrees down from horizontal when affixed to the signal head.
5. Visors shall be secured to the signal head door by a minimum of four screws mounted perpendicular to the face of the signal head door.

814.03.04 Terminal Block

1. The terminal block shall be a 5 position, barrier block with 15 quick disconnect terminals and 5 screw clamp terminals.
2. The terminal block shall be mounted vertically in the red section.
3. Screws shall be provided for connecting field wires to each terminal section.
4. A sheet of waterproof insulating paper shall be installed between the housing and the terminal block.
5. One (1) terminal block shall be installed in each signal section.

814.03.05 Hardware

All hardware shall be stainless steel 10-8 Type 304.

814.03.06 Painting

1. All surfaces inside and out of the signal housing, door and visors shall be "powder coated" to the highest industry standards.
2. The color shall be Yellow and shall comply with Federal Standard 595c-13538.

3. The second coat shall be Traffic Signal Yellow Alkyd Urea Exterior Baking Enamel and shall comply with Federal Specification TT-3-489b and shall match Federal Specification TT-c-595.
4. The second coat on the inside of the tunnel and full circle visors shall be an Alkyd Urea Black Synthetic Baking Enamel, with minimum gloss reflectance, and shall meet the performance requirements of MIL-E-5557 Enamel Heat Resisting Glyceryl Phthalate, Type 4, Instrument Black.
5. The Final Coat shall be guaranteed not to crack, peel, or otherwise deteriorate for a period of five (5) years under local conditions. Stainless steel parts shall not be painted.

814.03.07 Mounting Assembly

1. A mounting assembly shall be installed on each signal head.
2. The type of mounting assembly will be according to the Contract Documents and the Engineer.
3. Mounting assemblies for span wire applications will consist of a span wire hanger, balance adjuster and service wire entrance fitting.
    a. Span wire hanger shall be 6 inch galvanized steel, "U-bolt" type with stainless steel hardware including clevis pin, cotter pin and washers.
    b. Balance adjuster shall be brass with a 1/2" wide slot at the bottom. The eyebolt shall be stainless steel and be 3/4" wide. Clevis pins shall be stainless steel and be 5/8" diameter.
    c. Wire entrance fitting shall be aluminum and be provided with grommets and gaskets. The service entrance and grommet shall be of sufficient size to accommodate two cables 3/4" outside diameter. The wire entrance fitting shall be painted to match the signal head.
4. Mounting assemblies for mast arm applications will consist of a mast arm mount signal bracket (1-way, 2-way, or 5-way)
    a. Mast arm mount signal bracket shall be cast aluminum alloy.
5. Mounting assemblies for side pole applications will consist of an upper and lower arm assembly.
    a. The upper and lower arm assembly shall be cast aluminum alloy.
6. Mounting assemblies for post top applications will consist of a post top assembly with upper and lower arms.
    a. The post top assembly shall be cast aluminum alloy.

814.03.08 Guarantee/Warranty

All material and workmanship furnished under this specification shall be guaranteed for a period of five (5) years from the date of delivery.

814.03.09 Miscellaneous

1. Manufacturer's name, trademark, model number, serial number, date of manufacture (month and year) and lot number shall be permanently identified on all removable components and hardware. This identification is required, and is in addition to any other identification that may be required in contract special provisions. The serial number and

model number shall be etched, stamped, molded, or attached using metallic, polyester, or vinyl self-adhesive labels. The use of adhesive backed paper labels is not acceptable.

2. Rated voltage and rated power in Watts and Volt-Amperes shall also be permanently marked on the back of each LED module.
3. The traffic signal manufacturer shall be ISO 9000 series certified.

814.03.10 LED Module Assembly.

1. LED modules shall fit in standard, incandescent vehicular traffic signal housings, as applicable, without modifications or the need for special tools, and shall be complete with a lens that is tinted for the appropriate color
2. Each LED module shall incorporate printed circuit boards containing required LEDs and circuit components. The LEDs shall be mounted via thermal epoxy and soldered to a metal core printed circuit board for optimum thermal transfer. A single layer of thermal transfer material shall be included between the metal core printed circuit board and the module's heat sink to ensure optimum transfer of heat away from the LED p-n junctions. There shall be air space between the heat sink and the interior sidewalls of the LED module housing to allow for proper dissipation of heat away from the LEDs.
3. Each individual Arrow LED module shall be wired such that the failure of one LED will result in the loss of not more than 5% of the signal module light output.
4. Each LED module shall have prominent and permanent markings for correct indexing and orientation within signal head housing by providing an up arrow, or the word "UP" or "TOP".
5. Each LED module shall feature two (2) 39 inch long 18 AWG minimum anti-capillary wire leads with strain relief and quick connect terminals with spade adapters for connection to the terminal block of the signal head. The two wire leads shall be separate at the point at which they leave the LED module. One of the conductors shall contain white insulation to signify neutral. The color of the other conductor shall be different and shall be used to differentiate between red, yellow, and green LED modules. The following City of Baltimore DOT Wire Lead Color Code Standard for vehicular traffic signal head LED modules shall be followed. The Manufacturer shall supply all modules, including sample modules for evaluation, to the City of Baltimore DOT, wired per the following wire lead color code:

Red:	Red & White
Yellow:	Yellow & White
Green:	Brown & White

6. The assembly and manufacturing process for the LED signal assembly shall be designed to ensure that all internal components are adequately supported to withstand mechanical shock and vibration from high winds and other sources.
7. Each LED module shall be watertight when properly installed in traffic signal housing. Each LED module shall utilize the same mounting hardware used to secure the incandescent lens and gasket assembly, and shall only require a screwdriver to complete the mounting.
8. Each LED module maximum weight shall be four (4) lbs. (1.8 kg).

9. Each LED module shall be designed for installation in the doorframe of standard traffic signal housings. Each LED module shall be capable of being sealed in the doorframe with a one-piece EPDM (ethylene, propylene rubber) or equal gasket.
10. Each LED module shall be weatherproof after installation and connection.
11. The power supply for the LED module shall be integral to the unit and shall be conformally coated.
12. The circuit boards and the power supply shall be contained inside the module.
13. Each LED module shall feature a rigid housing for protection in shipping, handling, and installation, and a one-piece gasket installed. Screw-in type products shall be prohibited for LED modules.

814.03.11 Vehicle Signal Lenses

1. The lens of the LED module shall be integral to the unit; the outer lens shall be convex. The outer surface of the lens shall be smooth and made of ultraviolet stabilized polycarbonate material.
2. Each LED module lens shall be capable of withstanding ultraviolet (direct sunlight) exposure for a minimum period of five (5) years without exhibiting any evidence of deterioration.
3. A surface coating, chemical surface treatment or protective covers shall be applied to each outer polymeric lens to provide front surface abrasion resistance for shipping and storing.
4. Each LED module shall incorporate a single circular inner Fresnel lens in the lamp housing to collimate the light emitted by the LED engine. The single inner Fresnel lens shall span the full diameter of the interior of the signal. The outer lens shall focus the collimated light to meet intensity and distribution standards required by this specification. Modules shall radiate equally in both upward and downward directions to ensure full expanded viewing.
5. Each LED ball module shall almost perfectly approximate to the motorist the appearance of an 8-inch standard incandescent signal indication. The surface of the LED ball module shall appear to the motorist to be nearly totally uniform in illumination, and eliminate the visibility of individual LEDs to the observer. The LED ball module shall have a wide viewing angle (Expanded/Extended View) making it suitable for installation on any span wire installations, thus eliminating the on/off effect caused by normal swaying.
6. The external lens surface for all LED modules shall be smooth with no raised surfaces so as to minimize the collection of dirt, debris, and other particulate contaminants, which may impact luminous intensity, and to facilitate periodic cleaning. External lens facets are prohibited.
7. The lens for the red ball and the red arrow shall be tinted red with similar characteristics to enhance on/off contrasts.
8. The lens for the yellow ball and the yellow arrow shall be tinted yellow with similar characteristics to enhance on/off contrasts.
9. The lens for the green ball and the green arrow shall be tinted green with similar characteristics to enhance on/off contrasts.
10. The use of tinting to enhance on/off contrasts shall not affect chromaticity and shall be uniform across the face of the lens.

814.03.12 Optical. The light intensity, chromaticity, and distribution from Red and Green LED traffic signal modules shall meet all photometric values stated in the most recent, formally-adopted version of the specification titled "Vehicle Traffic Control Signal Heads – Part 2: Light Emitting Diode (LED) Vehicle Traffic Signal Modules," published by ITE. Yellow LED traffic signal modules shall meet the chromaticity requirements of the most recently adopted ITE specification, and the light output shall be the peak instantaneous intensity measured at instant-on and at the highest intensity point.

1. The minimum maintained luminous intensity for red and green 12 inch LED ball signal modules shall meet the values shown in **Table I, Minimum Luminous Intensity for LED Ball Signal Modules (Expanded View),** over the temperature range given in Section 4.1. The minimum luminous intensity for yellow 12 inch LED ball signal modules shall meet the values shown in **Table I, Minimum Luminous Intensity for LED Ball Signal Modules (Expanded View),** at 25°C and at instant-on.
2. The minimum luminance for red and green LED arrow modules shall meet the values given in **Table II, Minimum Luminance for LED Arrow Signal Modules**, over the temperature range given in Section 4.1. The minimum luminance for yellow LED arrow modules shall meet the values given in **Table II, Minimum Luminance for LED Arrow Signal Modules**, at 25°C and at instant-on.
3. The intensity of all LED modules covered by this specification shall not vary by more than 10% over the allowable voltage range.
4. In addition, red and green LED modules shall meet the July, 1998 ITE VTCSH Part II standards and measurement criteria for LED modules, or latest formally adopted revision thereof. Test data to verify compliance of all applicable LED modules with this standard shall be provided from the following laboratory chosen by the City of Baltimore DOT:

   ETL Testing Laboratories
   3933 U.S. Route 11
   Cortland, New York 13045-0950

5. In addition, all modules shall meet minimum City of Baltimore DOT specification requirements. Additional laboratory compliance certificates, when applicable if required, must meet all City of Baltimore certification requirements and shall be furnished to the City prior to product acceptance.
6. Red ball, red arrow, yellow ball and yellow arrow LED modules shall utilize AlInGaP technology exclusively, either AS (Absorbing Substrate) or TS (Transparent Substrate), and shall not exhibit degradation of more than 30% of the initial light intensity following accelerated life testing (operating at 85 Degrees C and 85% humidity for 1000 hours). AIGaAs technology shall not be acceptable.
7. Green ball and green arrow LED modules shall utilize Indium Gallium Nitride (InGaN) technology. Green ball and green arrow LED modules shall not be illuminated when the applied voltage is less than or equal to 35 volts A.C. Illumination of green ball and green arrow LED modules shall be in compliance with the July , 1998 ITE VTCSH Part II when the applied voltage is between 80 and 135 Volts A.C.
8. The measured chromaticity coordinates of the LED modules shall conform to the following chromaticity requirements:

RED:	Y:	not greater than 0.308 or less than 0.998 -x
YELLOW:	Y:	not less than 0.411, nor less than 0.995 -x, nor less than 0.452
GREEN:	Y:	not less than 0.506 - 0.519 x, nor less than 0.150 + 1.068 x, or more than 0.730 -x.

a. Chromaticity requirements shall pertain to both ball and arrow LED modules.
b. Chromaticity requirements shall be satisfied throughout the useful life of the LED modules over the operating temperature range.

9. Red arrow, yellow arrow, and green arrow LED modules shall contain either three (3) rows of LEDs or shall have a uniform/full profile look forming the shape of the arrow, thus appearing the same as a standard incandescent arrow indication.
   a. Each LED arrow module shall meet the specifications stated in Section 9.01 of the ITE Publication Equipment and Materials Standards, Chapter 2 (Vehicle Traffic Control Signal Heads).
   b. LEDs shall be spread and arranged evenly across the illuminated portion of the arrow area.

Table I - Minimum Luminous Intensity for LED Ball Signal Modules (Expanded View)

GRID SPECIFICATION FOR 12IN RED BALL SIGNALS (cd)
Shaded area is ITE requirements for light intensity

	-27.5	-22.5	-17.5	-12.5	-7.5	-2.5	+2.5	+7.5	+12.5	+17.5	+22.5	+27.5
22.5U			20			20	20			20		
17.5U	16	20	22	22	22	22	22	22	22	22	20	16
12.5U	16	22	34	44	48	50	50	48	44	34	22	16
7.5U	16	38	89	145	202	226	226	202	145	89	38	16
2.5U			77	141	251	339	339	251	141	77		
2.5D			77	141	251	339	339	251	141	77		
7.5D	16	38	89	145	202	226	226	202	145	89	38	16
12.5D	16	22	34	44	48	50	50	48	44	34	22	16
17.5D	16	20	22	22	22	22	22	22	22	22	20	16
22.5D			20			20	20			20		

Note: Measurements are in Candelas

GRID SPECIFICATION FOR 12IN GREEN / YELLOW BALL SIGNALS (cd)
Shaded area is ITE requirements for light intensity

	27.5	22.5	17.5	12.5	7.5	2.5	-2.5	-7.5	-12.5	-17.5	-22.5	-27.5
22.5U			40			40	40			40		
17.5U	32	41	44	44	44	44	44	44	44	44	41	32
12.5U	32	44	69	89	97	101	101	97	89	69	44	32
7.5U	32	77	178	291	404	452	452	404	291	178	77	32
2.5U			154	283	501	678	678	501	283	154		
2.5D			154	283	501	678	678	501	283	154		
7.5D	32	77	178	291	404	452	452	404	291	178	77	32
12.5D	32	44	69	89	97	101	101	97	89	69	44	32
17.5D	32	41	44	44	44	44	44	44	44	44	41	32
22.5D			40			40	40			40		

Note: Measurements are in Candelas

Table II - Minimum Luminance for LED Arrow Signal Modules

	Minimum Luminance (cd/m²)
Red Arrow	5,500
Yellow Arrow	11,000
Green Arrow	11,000

814.03.13 Quality Assurance. The modules shall be manufactured in accordance with a manufacturer quality assurance (QA) program. The QA program shall include two (2) types of quality assurance: (1) design a quality assurance and (2) production quality assurance. The production quality assurance shall include statistically controlled routine tests to ensure minimum performance levels of the modules built to meet this specification, and a documented process of how problems are to be resolved.

1. QA process and test results documentation shall be kept on file for a minimum period of seven (7) years.
2. LED signal module designs not satisfying design qualification testing and the production quality assurance testing performance requirements described below shall not be labeled, advertised, or sold as conforming to this specification.
3. Design Qualification Testing
    a. Design Qualification testing shall be performed by the manufacturer or an independent testing lab hired by the manufacturer on new LED module design, and when a major design change has been implemented on an existing design.
    b. A major design change is defined as a design change (electrical or physical) which changes any of the performance characteristic of the module, results in a different circuit configuration of the power supply, or changes the layout of other individual LEDs in the module.
    c. A quantity of two (2) units for each design shall be submitted for Design Qualification Testing.
        i. Test units shall be submitted to the City after the manufacturer testing is complete.
        ii. Manufacturers testing data shall be submitted with test units for the City verification of Design Qualification Testing data.
    d. Burn in
        i. The sample modules shall be energized for a minimum of 24 hours, at 100 percent on-timed duty cycle, at a temperature of +74°C (+165°F) before performing any design qualification testing.
        ii. Any failure of the module, which renders the unit non-compliant with the specification after burn-in, shall be cause for rejection.
4. For Design Qualification Testing, all specifications will be measured including, but not limited to.
    a. Rated Initial Luminous Intensity. Measured over the operating temperature range.
    b. Chromaticity (Color). Measured over the operating temperature range.
    c. Electrical

i. All specified parameters shall be measured and used for quality comparison of production quality assurance on production modules. (Rated power, etc.)

d. Equipment Compatibility.

i. Modules shall be tested by the Manufacturer for compatibility with the controller unit(s), conflict-voltage monitors, malfunction management units and load switches. Each signal module shall be connected to the output of a standard load switch connected to an AC voltage supply between the values of 80 to 135 VAC with the input to the load switch in the "off"" position.

ii. The AC voltage developed across each LED signal module so connected shall not exceed 10 Vrms as the input AC voltage is varied from 80Vrms to 135 Vrms.

iii. The LED modules shall be fully compatible with all features provided in the City of Baltimore, DOT's conflict-voltage monitors and malfunction management units. The Manufacturer must insure that the modules are compatible with the "Dual Indication" feature. This feature, along with the load switch shall together operate as follows:

Under a NO LOAD condition (End of Life) the output of the load switch shall remain "HIGH" and shall remain "HIGH" until the "Dual Indication" feature of the conflict-voltage monitor or malfunction management unit detects this condition and shall place the intersection on "FLASH" after one (1) cycle.

iv. Compatibility testing in no way relieves the manufacturer /vendor or contractor from any problems that may occur in the field due to non-compatibility with the aforementioned equipment.

v. This specification covers all known non-compatibility problems which may occur. However, in the event the LED modules are found not to be compatible with any existing equipment covered by this specification, due to further testing conducted by the City, shall in no way relieve the manufacturer/vendor or contractor from compliance.

vi. Final responsibility on compatibility shall be the manufacturer/vendor or contractor's responsibility and any or all modifications, if needed, shall be at no additional expense to the City of Baltimore.

e. Mechanical vibration testing shall be as per MIL-STD-833, Test Method 2007, using 3 four minute cycles along each x, y, and z axis, at a force of 2.5 Gs, with a frequency sweep from 2 HZ to 120 HZ. The loosening of the lens, of any internal components, or other physical damage shall be cause for rejection.

f. Temperature cycling shall be performed as per MIL-STD-883, Test method 1010. The temperature range shall be per "Environmental Requirements". A minimum of 20 cycles shall be performed with a 30 minute transfer time between temperature extremes and a 30 minute dwell time at each temperature. Module(s) being tested shall be energized and functioning throughout the duration of the test.

Failure of a module to function properly or any evidence of cracking of the module lens or housing after temperature cycling shall be cause for rejection.

g. Moisture resistance testing shall be performed on all modules mounted in a standard aluminum signal head housing as specified for use in the City per NEMA Standard 250-1991 for Type 4 enclosures. Any evidence of internal moisture after testing shall be cause for rejection.

5. Production Quality Control Testing
   a. The following Production Quality Assurance tests shall be performed on each new module prior to shipment. Failure to meet requirements of any of these tests shall be cause for rejection. Test results shall be retained by the manufacturer for seven (7) years.
   b. Burn-in period shall consist of each signal module being energized at rated voltage for a 30 minute stabilization period before the measurement is made.
   c. Each module shall be tested for rated initial intensity after burn-in.
      i. A single point measurement, with a correlation to the intensity requirements of Section 1.04 of the VTCSH for circular modules, may be used.
      ii. The ambient temperature for this measurement shall be +25°C (+77°F).
      iii. Each LED Module failing to meet minimum luminous intensity requirements specified in Section 8.1 of these specifications shall be cause for rejection.
   d. Each module shall be tested for required power factor after burn-in.
   e. Each module shall be measured for current flow in amperes after burn-in. The measured current values shall be compared against rated values resulting from design qualification measurements under "Design Qualification Testing". The current flow shall not exceed the rated value.
   f. Each module shall be visually inspected for any exterior physical damage or assembly anomalies. Careful attention shall be paid to the surface of the lens to ensure there are no scratches (abrasions), cracks, chips, discoloration, or other defects. Any such defect shall be cause for rejection.
   g. The manufacturer shall be required to undertake Design Qualification and Production Quality Control testing as specified in sub-sections **4** and **5** of **Quality Assurance** in these specifications and report all results to the City. Procurement and installation of LED modules prior to the receipt and acceptance of test results by the City shall be done at the contractor's risk.
6. Conflicts with testing procedures/certification.
   a. In the event this specification has conflict(s) between City testing procedures/certification and the ITE testing procedure/certification, the City procedures shall apply.

814.03.14 Warranty.

1. Manufacturers shall provide a written warranty issued by their factory located in the NAFTA country of module origin with the following minimum provisions
2. The manufacturer shall provide a written warranty against defects in materials and workmanship for a minimum period of sixty (60) months.

3. The warranty period shall begin on the date the LED module is energized and placed into service at the intersection, or ninety (90) days after delivery of the module to the Department's Traffic Signal Division Warehouse (or any other receiving facility if specified in the Contract Documents), whichever occurs first.
4. Replacement LED modules shall be provided on a one-for-one basis after receipt of the LED modules that no longer conform to this specification and shall be replaced within 45 calendar days after the Manufacturer has receipt of the modules. Replacement modules shall be repaired or replaced at no additional cost to the City, with the exception, the City shall pay for the one-way shipping of the modules to the Manufacturer.
5. All warranty documentation shall be submitted to the City prior to random sample testing.
6. Red and green LED modules shall be warranted to be in compliance with the July, 1998 ITE VTCSH, Part II Specifications, or latest revision thereof, for luminous intensity for a period of sixty (60) months.
7. Yellow LED modules shall be warranted to be in compliance with City of Baltimore DOT specifications for luminous intensity for a period of sixty (60) months.
8. LED signal modules which exhibit luminous intensities less than the minimum values within the first sixty (60) months the module is placed into service at the intersection, or ninety (90) days from the date of delivery, whichever comes first, shall be replaced or repaired, at no additional cost to the City.
9. The City reserves the right to randomly select, and not to exceed, one-quarter percent (1/4 %) of the LED modules, procured and installed by an LED RFP contract; or per City Purchase Order (P.O.), for testing to conformance to this specification. Said testing shall be conducted once per year, during the first sixty (60) months of the warranted life of the modules. The Manufacturer shall conduct said tests and reports for the City, at no additional cost.
10. The City, at anytime during the sixty (60) month warranty period, at its discretion, may have randomly selected modules, Independent Lab tests conducted for conformance to the specification. Independent Lab testing shall be conducted at the City's expense; however, in the event of "failure" (non-conformance to the specification), the Manufacturer shall be required to reimburse the City for said testing.
11. Upon request, the LED lamp module manufacturer shall provide written documentation of its ability to satisfy a worst-case, catastrophic warranty claim.
12. The documentation shall clearly show that the manufacturer and/or its parent corporation possess a minimum of US$10 million in net worth, within the United States, Canada, and/or England.
13. A current corporate annual report duly-certified by an independent auditing firm, containing a balance sheet illustrating such net worth, is an example of suitable documentation.
14. The documentation shall clearly disclose:
    a. The country in which the factory of module origin is located
    b. The name of the company or organization that owns the factory of module origin including any and all of its parent companies and/or organizations, and their respective country of corporate citizenship

15. For firms with business and/or corporate citizenship in the United States of less than seven years, the process by which the end-users/owners of the modules will be able to obtain worst-case, catastrophic warranty service in the event of bankruptcy or cessation-of-operations by the firm supplying the modules within North America, or in the event of bankruptcy or cessation-of-operations by the owner of the factory of origin, shall be clearly disclosed.

814.03.15. Conflicts and Waivers.

1. The technical and warranty requirements of this document shall prevail over any other specification or standards for the installation of Light Emitting Diode (LED) Traffic Signal Modules in Baltimore City, Maryland unless amended by additional requirements and/or testing. This specification supersedes all previous specifications.
2. In the event of conflicts within this specification between technical; certification; and/or testing minimum or compliant standards/requirements, as stated in sub-section **6a** of **Quality Assurance**, or as referenced elsewhere throughout this specification, City requirements shall prevail in all cases.
3. The Department reserves the right to waive in writing any portion or portions of this specification. The following sub-sections **4** and **5** of **Conflicts and Waivers**, of this specification, shall however be excluded from waiver by the City.
4. This technical specification shall be for LED module retro-fit of new "standard" die-cast aluminum traffic signal heads by the manufacturer/suppliers of vehicular traffic signal heads procured by: County, State, Municipal or Private Developer for the installation and operation of vehicular traffic control signals installed within the jurisdictional boundaries of Baltimore City, Maryland which are maintained by City of Baltimore Department of Transportation.
5. This technical specification shall be for LED module installation in new "standard" die-cast aluminum vehicular traffic signal heads and retro-fit of existing "standard" die-cast aluminum vehicular traffic signal heads, for the conversion of all existing vehicular traffic signal heads within the jurisdictional boundaries of the City of Baltimore, Maryland which are maintained by the City of Baltimore, Maryland, Department of Transportation.

814.03.16 Omissions and Errors.

1. Rectification of errors and inclusion of omissions, which would preclude the proper functions of the above equipment as intended by the City, are the responsibility of the vendor.
2. Such omissions and errors must be brought to the attention of the Superintendent of Signal Electronics Maintenance Facility prior to submission of bid. Failure to inform same or his designate will be deemed sufficient reason for bid rejection.
3. Should such omissions and errors be encountered after installations are under way, responsibility for any additional cost incurred as a result thereof, shall be borne by the contractor/vendor.
4. It is the author's purpose and intent to obtain "State of The Art Equipment", no part of these specifications is intended to exclude potential bidders. All equipment submittals will be tested on their merits as well as compliance to these specifications.

814.03.17 Miscellaneous.

1. Each LED Module shall have the manufacturer's name, trademark, model number, serial number, date of manufacture (month and year) and lot number as identification permanently marked on the back of the module. This identification is required, and is in addition to any other identification that may be required in contract special provisions. The serial number and model number shall be etched, stamped, molded, or attached using metallic, polyester, or vinyl self-adhesive labels. The use of adhesive backed paper labels is not acceptable.
2. Rated voltage and rated power in Watts and Volt-Amperes shall also be permanently marked on the back of each LED module.
3. The LED traffic signal manufacturer shall be ISO 9000 series certified.

814.03.18 Optically Programmed Signals - Optical System.

1. The head shall employ no or hoods to obtain this programmable limitation, however, if required, hoods shall be provided to eliminate extraneous light falling on the lens. The projected indication may be selectively visible or veiled anywhere within 15 degrees of the optical axis.
2. The indication from the lens shall meet the transmittance, chromaticity, and distribution requirements of the most recently adopted ITE specification.
3. Optically programmed signal heads shall have an optical system containing a color filter, lamp fixture, lamp collar, optical limiter/diffuser, and objective lens. All other minor components necessary for the full utilization of the programmable head shall be provided.
4. The optical limiter shall provide an accessible imaging surface at focus on the optical axis for objects 900 to 1200 ft distance and permit an effective veiling mask to be variously applied as determined by the desired visibility zone. The optical limiter shall be composed of heat-resistant glass.
5. The objective lens shall be a high-resolution annular incremental lens hermetically sealed within a flat laminate of weather resistant acrylic or as approved by the Engineer. The lens shall be symmetrical in outline and may be rotated to any 90-degree orientation about its axis without displacing the primary image.
6. The lens shall be sealed to the housing door by a weather proof and mildew proof Ethylene Propylene Diene Monomer (EPDM) gasket and held in place by four lens clips and screws making a positive weatherproof and dust proof seal

814.03.19 LED Module. LED modules shall fit in optically programmed vehicular traffic signal housings, as applicable, without modifications or the need for special tools. LED traffic signal modules shall have:

1. The regulated power supply for the LED module shall be integral to the unit.
2. The circuit boards and the power supply shall be contained inside the module.
3. Each LED module shall feature a rigid housing for protection in shipping, handling, and installation.

814.03.20 LED Module Assembly

1. Each LED module shall have prominent and permanent markings for correct indexing and orientation within signal head housing by providing an up arrow, or the word "UP" or "TOP".
2. The assembly and manufacturing process for the LED signal assembly shall be designed to be compliant with MIL-STD-883 Method 2007 to ensure that all internal components are adequately supported to withstand mechanical shock and vibration from high winds and other sources.
3. Each LED module shall be watertight when properly installed in traffic signal housing.
4. Each LED module shall be designed for installation in a PAR-56 (3-prong) socket without the use of any tools.

814.03.21 Pedestrian Signal LED Modules

1. The LED module shall be a single, self-contained device, not requiring on-site assembly for installation into existing traffic signal housings.
2. The assembly of the LED module shall be designed to assure all internal components are adequately supported to withstand mechanical shock and vibration from high winds and other sources.
3. The LED signal module shall be protected by a textured non-glare UV treated polycarbonate lens.
4. The individual LED light sources shall be interconnected so that a catastrophic failure of a single LED will result in a total loss of not more than 3 LED's or 5% of the signal light output.
5. Three secured, color coded (blue, red, white), 36 inches long, 600V, 16 AWG jacketed wires, rated for service at +105°C, shall be provided for electrical connections.

814.03.22 Pedestrian Signal Chromaticity

1. The measured chromaticity coordinates for the "Lunar White" walking Person and the "Portland Orange" Hand and Digits shall conform to the chromaticity requirements of section 8.04 and figure 1 of the PTCSI standard.
2. The chromaticity measurements shall remain unchanged over the input line voltage range of 80 VAC to 135 VAC.
3. Chromaticity requirements shall be satisfied throughout the useful life of the LED modules over the operating temperature range.

814.03.23 Pedestrian Signal LED Module Drive Circuitry

1. For a minimum period of 60 months, the maintained minimum luminance values for the modules under the ambient operating temperature range of -40°C to +74°C and a 60±3 Hertz ac line power over a voltage range from 80 VAC RMS to 135VAC RMS, when measured normal to the plane of the icon surface, shall not be less than:
   - Walking person: 2,200 cd/m^2;
   - Hand: 1,400 cd/m^2.
2. The luminance of the emitting surface, measured at angles from the normal of the surface, may decrease linearly to a value of 50% of the values listed above at an angle of 15 degrees.

3. The light output requirements in this specification apply to pedestrian signal heads without any visors, hooded or louvered.
4. The luminous intensity of "Hand" and "walking person" LED modules shall not vary by more than 1% over the allowable voltage range.
5. All modules shall meet minimum City of Baltimore DOT specification requirements. Additional laboratory compliance certificates, when applicable if required, must meet all City of Baltimore certification requirements and shall be furnished to the City prior to product acceptance.
6. The LED drive current on both Hand/Person messages shall be regulated to compensate for line voltage fluctuations over the range of 80VAC to 135 VAC.

814.03.24 Pedestrian Signal LED Module Signal Display

1. The LED countdown signal module shall consist of a double overlay message combining the symbols of a Hand and walking Person and two "7 segment" digits forming the time display.
2. The Pedestrian icon LEDs shall be arranged in a manner to form solid icon symbols. The shape of the symbols shall conform to the standard symbols for pedestrian signals.
3. The LED's shall be distributed evenly in each Pedestrian icon. The distance between each LED shall be evenly spaced.
4. The Hand/Person symbols shall be not less than 10 inch in height and 6.5 inch in width. The Hand symbol shall be made of at least 84 high intensity LEDs, and the Person symbol shall be made of at least 68 high intensity LEDs, in order to assure adequate luminous intensity.
5. The countdown digits shall be 9 inch high, shall be made of at least 144 LED's, and shall be MUTCD compliant for crosswalks over 100 feet.
6. The countdown digits shall consist of two rows of LEDs in a staggered configuration, producing rounded numeral corners.

814.03.25 Pedestrian Signal Countdown Functionality

1. The countdown module shall be compatible with all types of traffic controllers in existence.
2. The countdown timer module shall have a micro-processor capable of recording it's own time when connected to a traffic controller.
3. When connected, the module shall blank out the display during the initial cycle while it records the countdown time using the Walk & D/Walk signal indications.
4. The countdown timer module shall continuously monitor the traffic controller for any changes to the pedestrian phase time and re-program itself automatically if needed.
5. The countdown module shall register the time for the walk and clearance intervals individually and shall begin counting down at the beginning of the pedestrian change interval.
    a. After the countdown displays "zero," the display shall remain dark until the beginning of the next countdown.
    b. The countdown pedestrian signal shall display the number of seconds remaining until the termination of the pedestrian change interval.

   c. Countdown displays shall not be used during the walk interval, or during the yellow change interval of a concurrent vehicular phase.
6. When the flashing Hand becomes solid, the module shall display "zero" for one second and then blank-out. The display shall remain dark until the beginning of the next countdown.
7. In the event of a pre-emption sequence, the countdown module shall skip the pre-empted clearance time and reach "zero" at the same time as the flashing Hand becomes solid.
8. In the cycle following a pre-emption call, the signal shall display the correct time and not be affected by the reduced previous cycle. The countdown shall remain synchronized with the signal indications and always reach "zero" at the same time as the flashing Hand becomes solid.
9. The countdown timer shall be capable of timing 2 consecutive complete pedestrian cycles outputted by the traffic controller (no steady Hand signal between cycles).
10. The countdown module shall not display an erroneous or conflicting time when subjected to defective load switches.
11. The countdown module shall have an internal conflict monitor preventing any possible conflicts between the Hand/Person signal indications and the time display. It shall be impossible for the display to countdown during a solid Hand indication.
12. The countdown module shall have a user selectable option offering the possibility to countdown the entire duration of the walk and clearance time.
13. The countdown module shall have accessible dip-switches for the following user selectable options:
    1- Display "zero" during stand-by.
    2- Turn on all LEDs for testing.
    3- Countdown walk + clearance time.
    4- Disable countdown display.
14. The LED module shall have a removable plug on the rear of the unit allowing easy access to dip switches.

814.03.26 Pedestrian Signal Housings. All countdown pedestrian signal housings to be supplied under this specification are to be a one piece corrosion resistant aluminum alloy die-casting conforming to the latest ITE VTCSH specification alloy and tensile requirements, and single-piece cast aluminum swing down doorframe, having smooth, accurate surfaces and edges.

1. The maximum overall dimension of the signal shall be 18.75" W x 18.75" H x 9"D. (470 x 476 x 229 mm), including the visor and hinges. The distance between the mounting surfaces of the upper and the lower openings shall be 15.75" (400 mm).
2. The case shall be one piece corrosion resistant aluminum alloy die-casting, complete with integrally cast top, bottom, sides and back.
   a. Four integrally cast hinge lug pairs, two at the top and two at the bottom of each case, shall be provided for operation of the swing down door.
   b. When properly mated to other pedestrian signal components and mounting hardware, the case shall provide a dustproof and weatherproof enclosure and shall provide for easy access to and replacement of all components.

3. The case shall be mounted via upper and lower openings, suitable for either post top or bracket mounting. The openings shall accommodate standard 1.5" (39 mm) pipe brackets. The bottom opening of the case shall have a serrated boss integrally molded into the case. The dimensions of the boss shall be as follows:
    a. Outside diameter - 2.625 inches
    b. Inside diameter - 1.969 inches
    c. Number of teeth - 72
    d. Angle of teeth - 90°
    e. Depth of teeth - 1/13 inch
    f. The dimension of the serrated boss has 72 teeth.
4. A serrated boss of the same dimensions shall be an option for the top opening of the case. The radial angular grooves of the serrated boss, when used with the serrated fittings, shall provide positive positioning of the entire signal to eliminate rotation or misalignment of the signal.

814.03.27 Pedestrian Signal Housing Doors. All countdown pedestrian signal housing doors to be supplied under this specification are to be a one piece corrosion resistant aluminum alloy die-casting, having smooth, accurate surfaces and edges.

1. The doorframe shall be one piece, complete with two hinge lugs cast at the bottom and two latch slots cast at the top of each door.
    a. The door shall be attached to the case by means of two Type 304 stainless steel spring pins.
    b. Two stainless steel hinged bolts with captive stainless steel wing nuts and washers shall be attached to the case with the use of stainless steel spring pins.
    c. Latching or unlatching of the door shall require no tools.
2. A gasket groove on the inside of the door shall accommodate a weather proof and mildew proof Ethylene Propylene Diene Monomer (EPDM) gasket. When the door is closed it shall seal against a raised bead on housing making a positive weatherproof and dust proof seal.

218.03.28 Pedestrian Signal Visor. Pedestrian signals shall have tunnel visors, egg crate visors are prohibited.

MEASUREMENT AND PAYMENT. Vehicular Traffic Signal Head Sections furnished and installed will be measured and paid for at the Contract unit price per each section of signal head type and size as specified in the Contract Documents. The payment will be full compensation for all lenses, and or LED modules, terminal blocks, assembly, mounting hardware, backplates, housing assembly, and incidentals for all material, labor, equipment, tools, and incidentals necessary to complete the work.

Pedestrian Signal Assemblies furnished and installed, and all mounting hardware, visors, terminal blocks, LED pedestrian countdown timer modules, mounting hardware, assembly, and labor necessary to complete the work will be incidental to the Contract unit price of each section of signal head type and size as specified in the Contract Documents.

CATEGORY 800
TRAFFIC

CONTROLLER AND CABINET

DESCRIPTION This work shall consist of furnishing and installing a City of Baltimore NAZTEC Model 980 TS2 Type 1 controller with the latest software revision and cabinet as specified in the Contract Documents. All equipment shall be compatible with existing equipment, and as such this will be a sole source item and no alternates will be accepted. Naztec's contact information is as follows:

Naztec, Inc.	Telephone:	281-240-7233
820 Park Two Drive	FAX:	281-240-7238
Sugar Land, TX 77478	Email:	naztec@naztec.com

MATERIALS.

GPS Time Reference Receiver and Supporting Equipment. The GPS Time Reference Receiver shall include a Naztec OEM Model 16-HVS that is readily compatible with the City of Baltimore Naztec Series 980 signal Controller and latest software revision. This equipment shall include a GPS Antenna, 16-foot Cat 5 cable, cable connectors, and controller interface adapters for a complete and operational installation. Installation of the GPS Antenna either shall be on top of the cabinet or mounted on the signal pole, as directed by the Engineer. This item shall be furnished as a turn-key system. ***Each cabinet of any type will include a GPS unit.***

Eight-Phase Fully-Actuated Signal Controller. Contractor shall furnish and install an eight-phase Naztec Model 980-BALTMR TS 2 Type 1 signal controller and latest firmware release, all harnesses required for a fully operational controller in a NEMA TS 2 Baltimore base or pole mounted cabinet.

Type C Base Mounted Controller Cabinet. Contractor shall furnish and install a non-vented eight-phase Model NEMA TS 2 Baltimore Type C cabinet (City part number INT-70006-TS2CBM) with all harnesses required for a fully operational cabinet. Cabinet shall be populated with four two-channel detector amplifiers, video interface equipment, all output devices, communication terminal blocks, Bus Interface Units (BUIs), power supplies, communication surge arrestors, NEMA TS2 EDI. Eagle Signal or Econolite MMU Model 16LE SmartMonitor, and monitor harness. Each Type C sheet aluminum cabinet shall be a NEMA TS2, size 6 modified and shall be in full compliance with the TS2 specifications and shall include all necessary base-mounting accessories including anchor bolts and adapter bases, if required. **All cabinet material shall be 5052-H32 tampered aluminum.** Each cabinet shall be provided with a Technician Service Panel switches for Flash/Normal, Stop Time/Run/Normal, and Controller Power ON/OFF; Door Open Alarm Input; Local Flash Alarm Input; Ped Call Test switches for Phases 2, 4, 6 and 8, power supply, removable 3/8-inch Allen Wrench Lock in lieu of the door handle, three-point door latching mechanism and one 18-inch interior flexible arm goose neck lighting fixture and 25 watts incandescent lamps. The lamp shall be wired to either a 15-Amp

ON/OFF toggle switch mounted to a door activated switch mounted near the top of the door. The lighting arm shall be mounted to the door, and when swung open the light shall illuminate the upper portion of the cabinet. The Contractor shall furnish and install suppression devices for output file, power supply and controller unit. Communication suppressors shall be supplied only for system controllers and shall be interchangeable with the surge arrestors installed in the current City cabinet design. Power Supply suppressors shall be interchangeable with the current City cabinet standard design Catalog cut sheets of the cabinet are required for approval by the City of Baltimore prior to final fabrication.

MEASUREMENT AND PAYMENT

Type C Base Mounted Controller Cabinet with Eight-Phase Fully-Actuated Signal Controller. Payment for this item shall be on a "per each" basis. Payment shall be full compensation for all equipment, materials, software, installation, base-mounted cabinet, input devices specified, output devices specified, communication terminal blocks and communication surge arrestors, BIUs and power supplies, MMU Model 16LE SmartMonitor and harness, shop drawings, catalog cuts, and all equipment, materials, and any other work necessary to complete the work to the satisfaction of the Engineer. The unit price shall include flashers, relays, load switches, two detector input isolation cards, BIUs, harnesses, SDLC cables, surge and transient protection devices, cabinet power supply, GPS Unit, programming signal timing plans, adapter cables, cabinet mounting kits and shipping and handling. Further, this item shall also include programming the controller unit with the prescribed phasing and timing information, detector assignment set-up, coordination, time base control functions, and timing information (phasing and timing information to be identical to that of the existing controller) any fees for permits required for the work under this item, and all wiring of existing amplifier cabinets with new cabinet equipment.

CATEGORY 800
TRAFFIC

VIDEO DETECTION EQUIPMENT

DESCRIPTION. This work shall consist of furnishing and installing video detection equipment in accordance with this special provision and as shown on the plans or as directed by the Engineer. Video detection equipment shall detect by processing video images and providing detection input for NEMA TS-1 and NEMA TS-2 traffic signal controllers.

MATERIALS.
Video Image Processor (VIP)

1) The VIP shall be modular by design and housed in either a self-contained stand-alone unit or fit directly into NEMA TS1 & TS2 type racks as well as Type 170/179 input files. The VIP shall be interchangeable between a shelf or rack mount installation without replacing or modifying existing the VIP units.

2) The system shall control from 1 to 6 VIP boards allowing for 1 to 12 image sensors

3) The system shall be designed to operate reliably in the adverse environment of roadside cabinets and shall meet or exceed all NEMA TS1 and TS2, as well as Type 170/179 environmental specifications.

4) Ambient operating temperature shall be from –35 to +75 degrees Centigrade at 0 to 95% relative humidity non-condensing.

5) The system shall be powered by 12-40 VDC and draw less than 2 amperes.

6) The system shall utilize cabinet 24 VDC for rack mount installations or external 24 VDC for stand-alone shelf installations.

7) Surge ratings shall be set forth in the NEMA TS1 and TS2 specifications.

8) Serial communications shall be through an RS232 serial port. This port can be used for communications to a modem or laptop to upload/download detector configurations, count data and software upgrades. RS485 on the rear edge connector shall facilitate communications to other VIP boards.

9) Each VIP board shall have 4 opto-isolated open collector outputs. Twenty (20) additional outputs shall be available via the expansion port. The VIP shall have 20 presence detection zones and 4 data detection zones per camera. Data zones shall collect and store vehicle counts, volume, speed, gap time, headway, occupancy, and classification. Data shall be time-stamped (6713 intervals) and stored onboard (non-volatile memory) in intervals from 1-60 minutes.

10) Data alarms are generated for: queue, inverse direction, speed drop, no video, and errors.

11) Must be able to provide single or double loop emulation.

12) Presence hold time must have parameters that range from 10 to 600 seconds.

13) Each VIP board shall allow for 20 digital inputs via the I/O Expansion port.

14) Each VIP board shall have error detection. An output contact will open if the video signal is bad or the VIP board is not functioning properly. A user defined quality level will automatically put the VIP into a recall state in cases of severe degraded visibility (i.e., fog, blizzard, etc.). Normal detection resumes when visibility improves above the user defined quality level.

15) Operator selectable recall shall be available via the VIP front panel. Holding the recall switch on for 5 seconds shall activate this function.

16) A video select button on the VIP front panel will switch between camera images of the VIP.

17) The VIP board shall have 2 video inputs (RS-170 NTSC or CCIR composite video) and two video outputs (one on the front panel and one on the edge connector). The video inputs shall be though the VIP board's edge connector.

18) The VIP board shall have a reset button on the front panel to reset video detectors to "learn" the roadway image. During "relearn", selectable recall can be enabled or disabled for immediate operation. Learning time of video detectors shall be less than 5 minutes.

19) External surge suppression, independent of the VIP board shall separate the VIP from the image sensor.

20) The VIP board shall have separate light emitting diodes (LEDs) that indicate:

    i) POWER: Red to verify power supply.

    ii) I/O COMM: Red to indicate communications to expansion boards.

    iii) VIDEO 1 & 2: Red to verify the presence of video input 75 Ohm.

    iv) TX & RX: Red to indicate communications via the serial port.

    v) OUT1- OUT4: Green if the corresponding detection group is active.

21) The VIP board shall also have 2 separate buttons for VIDEO SELECT:

    i) RECALL: Manually places call on detectors.

    ii) RESET: Manually reset detectors to "learn" new background.

22) The video detection system shall be capable of being programmed locally with a handheld keypad. Keypad and monitor must be separate units. A PC mouse will not be allowed. The monitor is to have a 9 inch, black and white screen.

23) The VIP board shall have a video out female RCA style connector, DB9 female Service port and DB9 I/O Expansion port.

24) The VIP Expansion board shall have 8 dip switches that define inputs and outputs used (range: 1-12 or 13-24). The VIP Expansion board shall also have separate LEDs that indicate:

    i) POWER: Red to verify power supply.

    ii) COMM: Red to indicate communications to VIP board.

    iii) I/O1- I/O4: Green if the corresponding detection group is active.

25) Event Log Database: The VIP module shall have an onboard database capable of time stamping and storing 500 events. The Event Log Database can be viewed or downloaded to a selected spread sheet. Erasure of the Event Log Database shall not alter programmed configurations. As a minimum, the VIP shall log and time stamp the following events:

    i) Firmware upgrade
    ii) Loss of video signal.
    iii) Resumption o f video signal.
    iv) Configuration change.
    v) Bad video quality.
    vi) Loss of power to VIP module.
    vii) Resumption of power to VIP module.
    viii) Speed alarm.
    ix) Inverse direction.
    x) Recall activated.

26) Each VIP board shall be capable of processing two (2) separate video signals (two (2) separate cameras) per VIP board. The video signal shall be analyzed in real time (30 times per second).

27) The system shall be expandable up to 12 cameras that may be connected to different VIP units and programmed independently.

28) The system shall be capable of displaying detectors on the video image with associated outputs. Outputs/Inputs status will be indicated on the screen. Parameters will also include the ability to view raw video without any verbiage and/or detectors for surveillance purposes.

29) Each VIP board will detect within the view of the connected camera the presence of

vehicles in user defined zones. Detectors available shall be presence, count, queue, delay, extension, or pulse mode of either arrival or departure of vehicles. Delay and extension shall be defined between 0.1 – 99.9 seconds and pulse mode between 0 – 200msin 33ms increments if NTSC is used. Each VIP board shall also detect and collect traffic data of passing vehicles in user-defined zones within the view of the connected camera.

30) Collected traffic data by direction shall include:

i) Volume (absolute numbers) per length class and per lane.
ii) Average speed (km/h or mph) per length class and per lane.
iii) Average gap time (1/10 sec) per length class and per lane.
iv) Average headway (m or feet) per lane.
v) Occupancy (%) per lane
vi) Concentration (vehicles/km or mile) per lane.
vii) Average length (m or feet) per lane.
viii) Confidence level (0-10) per lane.

31) The VIP board shall be programmed without the use of a supervisor computer. A standard CCTV monitor and handheld keypad plugged into the VIP serial port will facilitate detector programming. The handheld keypad shall include the following keys and respective functionalities:

Keys	Functionality
Enter Key	• To enter a menu, a submenu or an item within a submenu.
	• To select a value for a parameter and exit the topic.
Escape Key	• To exit the menu or submenu.
	• To exit the main menu and save the settings in the current configuration
Arrow Keys	• To scroll through a menu.
	• To scroll through the values of a parameter.
	• To select a submenu.
	• To make a presence zone direction sensitive.
F1 Next Key	• To proceed to the next detection zone.
F2 Prev Key	• To move to the previous detection zone.

Keys	Functionality
F3 Add Key	• To add a detection zone.
F4 Del Key	• To delete a detection zone.
Dir Key	• To make a data zone direction sensitive.
Help Key	• To display help text for an item.
Output Number Key	• To assign an output number to a detection zone.
Operate Key*	• To put the board in operation mode.
Edit Key	• To change settings while starting from default values for all parameters.
Modify Key*	• To change settings while starting from the last saved settings for all parameters.

* The functionality of this key is only for the video system communications modules

32) The VIP board shall store up to 8 detector configurations (4 per video input). It shall be possible to switch between detector configurations manually, automatically by time of day or remote input.

33) Via the serial port, detector configurations can be uploaded to a laptop and stored on disk.

34) Detectors may be linked to 24 outputs and 20 inputs using Boolean Logic features: AND, OR, NOT. It will be possible to generate conditional outputs based upon inputs from a controller.

35) It shall be possible to make a detector directional sensitive. Options will include an omni-directional detector or a detector that only senses movement: from right to left, left to right, up to down or down to up as you look at the monitor.

36) All detectors and parameters can be changed without interrupting detection. For example: when one detector is modified, all existing detectors continue to operate, including the one that is being modified. When the new position is confirmed, the new detector will enter a learning phase. Once the new detector is in function, it will take over the job of the old one. In this way, the detector is always fully operational with no interruption on any detector, even during modification. Learning phases for new detectors shall not exceed 10 seconds.

37) Four data detection zones per camera on a two camera VIP board may be used for collection of vehicle count, speed, classification, occupancy, density, headway, and gap time. These detectors will detect and store traffic data at user-defined intervals of 1, 2, 3,

5, 6, 10, 15, 30 & 60 minutes. It shall be possible for each VIP board to store up to 6713 intervals of data in non-volatile memory.

38) Six detectors per camera may be used as queue detectors. Using on screen calibration, queue detectors will detect queue delays and display the queue length in feet or meters. A queue may also generate an output alarm from the VIP board.

39) Associated software shall be used with a PC to download count data and export to a spreadsheet. The software shall also be used to upload/download detector configurations, traffic data, technical events and update software versions of the VIP board.

40) All software upgrades to associated software and VIP board software shall be provided at no cost to the City for the expected life of the VIP board.

41) The VIP board shall have an internal clock with daylight saving time system, which can be enabled or disabled.

42) The VIP board shall provide overlaid tool tips for each individual menu- and submenu-items.

43) The VIP board shall have an optional password implementation. Different user-levels shall be available each having different rights.

44) All equipment must be capable of having a minimum of 10 users that can be defined for each user-level.

45) The VIP board shall be able to delay or extend a detector zone output in combination with an input from the controller.

46) The VIP board shall detect wrong-way drivers and shall provide an alarm/event via communication board and/or output.

47) The VIP board shall provide an alarm and/or output when the user selected queue detection threshold of occupancy is exceeded for more than a user selected time threshold.

48) The VIP board shall distinguish five classes of detected vehicles based upon user selectable vehicle length thresholds.

49) The VIP shall be able to emulate loop emulation with user selectable loop dimensions.

50) The VIP shall have a Detection Hold Time function. The timing parameters shall be 10 – 600 seconds.

51) The VIP board shall provide advanced settings to optimize detection to avoid cross-lane traffic occlusion. Directional detectors shall be able to be programmed for Low, Medium or High depending on the severity of the occlusion.

52) The VIP shall be programmable for Wrong Way Suppression Delay. The timing parameters shall be 1 – 30 seconds.

53) The VIP board shall utilize advanced shadow rejection algorithms. It shall be possible to place detection zones over lane markings without affecting the shadow rejection accuracy from adjacent vehicle (moving) shadows.

54) The VIP board shall utilize an advanced Tree Shadow Suppression algorithm to suppress false detection of moving shadows (non-vehicular, i.e. trees) within a detection zone. It shall be possible to enable or disable this feature.

55) The VIP board shall provide integrated image quality diagnostics eliminating the need for users to manually place quality detection zones on the image. Advanced diagnostic information shall display both the quality of the video images (Qim) as well as the quality of detection (Qdet). The Qim and Qdet together will be averaged to provide an overall quality (Q). Each quality diagnostic (Qim, Qdet & Q) will be based on a 1 (poor quality) to 10 (excellent quality) scale.

56) The VIP board shall provide the capability to enter a "recall" state if the quality threshold falls inside a user-defined range. The range shall be defined by the Quality Level (1-10) and a timeout range of 1 to 99 minutes. For example, if the quality drops to level 5 for 2 minutes, the VIP shall enter a "recall" mode. Once the quality rises above level 5 for 2 minutes, the VIP resumes normal operation. The VIP shall also provide a contact closure output during this condition.

b) **Video System Communications Module**

1) The Communication board shall be modular by design and housed in either a self-contained stand-alone unit or fit directly into NEMA TS1 & TS2 type racks as well as Type 170/2070 input files.

2) The Communication board shall control from 1 to 6 VIP boards allowing for 1 to 12 image sensors.

3) The system shall be designed to operate reliably in the adverse environment of roadside cabinets and shall meet or exceed all NEMA TS1 and TS2, as well as Type 170/2070 environmental specifications.

4) Ambient operating temperature shall be from –34 to +74 degrees Centigrade at 0 to 95% relative humidity non-condensing.

5) The system shall be powered by 12-40 VDC and draw less than 2 amperes.

6) Serial and Ethernet (TCP/IP) communications shall be through respectively an RS232 serial port (F DB9 connector) and Ethernet port (RJ-45 connection). These ports can be used for communications to a laptop or modem to upload/download detector configurations, traffic data, technical events, send software upgrades and do remote setup

of detectors. RS485 on the rear edge connector shall facilitate communications to VIP boards.

7) Surge ratings shall be set forth in the NEMA TS1 and TS2 specifications.

8) The Communication board shall have separate light emitting diodes (LEDs) that indicate:

   i) POWER: Red LED to verify power supply.
   ii) LAN: Red LED to indicate data activity over Ethernet communication.
   iii) VIDEO OUT: Female RCA style connector.
   iv) RESET: Manual reset to re-initialize communications.
   v) SERVICE: DB9 female Service port for setup of communication board and also used for serial/dial-up communication.

9) The Video System Communication board shall control from 1 to 6 VIP boards allowing for 1 to 12 image sensors.

10) The Video System Communication board shall provide a serial or Ethernet interface and communication to provide traffic data and allow remote configuration from the Traffic Operations Center.

11) The LAN port shall meet IEEE 802.3 with a RJ-45 connector and meet the following specification: Data rates for Ethernet via LAN port: 10Mbit/s, TCP/IP based protocol.

12) The serial communications port shall meet EIA-232-E and meet the following specifications:

   i) Dial-up data rates for RS232 via Serial port: maximum 57600 bps
   ii) Direct data rates for RS232 via Serial port: maximum 115200 bps
   iii) Mode of operation: asynchronous, serial, 8 bit word, 1 stop bit, duplex or half-duplex
   iv) Parity: none
   v) Handshake: RTS - CTS, DCD
   vi) Configuration: DTE

13) The communication shall support all functions of the video detection system.

14) All data transmissions shall be protected by CRC (cyclic redundancy checking) or an equivalent error detection method.

15) The communication board shall be programmed without the use of a supervisor computer. A standard CCTV monitor and keypad plugged into the communication serial port will facilitate board programming.

16) The communication shall support streaming video over Ethernet and serial communication.

17) Streaming video frame rate:

i) Over Ethernet: 10 frames/second
ii) Over serial communication: guarantee of 1 frame every 2 seconds.

18) Password protected remote setup (configuration upload/download, setup of detectors and detector parameters, setup of communication board parameters, firmware updates for Communication and VIP module) and monitoring of every connected VIP module shall be possible.

19) Dialup shall be possible through PSTN modems.

20) The Communication board shall log data and events provided by the VIP module(s) and transmit data and events to the HOST computer.

21) RS485 communication to every VIP module shall be established via the Edge connector.

22) The Communication board shall able to store on board pre-post video sequences of alarm triggered upon traffic user defined events. When connected to a HOST computer, the JPEG video sequences shall automatically be downloaded to the HOST computer.

23) The Communication board shall be able to accept PAL or NTSC video format.

24) A (via Ethernet) connection with a standard Internet browser shall be possible to communicate with the Communication board for remote set-up, monitoring and real-time data of the VIP modules.

25) Password protection shall be provided on the Communication board for remote operations.

c) **Image Sensor Camera**

1) The unit shall be a high resolution, 1/3" image format CCD camera, designed for professional video surveillance systems. Incorporating the latest in CCD technology, the video camera shall provide detailed video without lag, image retention, or geometric distortion. System must also be capable of working with either a color or black and camera.

2) Temperature range -20 to + 55 degrees C

3) Humidity 0% to 95% relative, non-condensing

4) Dimensions 47mm X 47mm X 83mm

5) Weight 7.1oz.

6) Camera mounting slots 1/4-20, top and bottom

7) Connectors BNC for video out

8) Lens mount CS Power-in / pressure screw Lens / 6-pin miniature "DIN" style

9) Finish Off -white semi-gloss polyurethane

10) Construction All metal housing

11) Rated input voltage 24 VAC, 60 Hertz

12) Voltage range 21 to 30 VAC

13) Nominal power 4 Watts

14) Imager Interline transfer CCD 1/3" format

15) Imager spectral response

i) 100% @ 550nm

ii) 30% @ 400nm and 800nm

16) Sync system EIA RS-170

17) Active picture elements 768 H X 494 V

18) Horizontal resolution 580 TVL

19) Sensitivity (2856 K)

20) Illumination (see table below)

Illumination		**Usable Picture**	**Full Video**
Scene Illumination	fc	0.01	0.048
	lx	0.12	0.48
Imager Illumination	fc	0.0024	0.01
	lx	0.0024	0.10

* F 1.2 lens @ 89% highlight

21) Signal to noise ratio: 48 dB minimum, 58 dB typical

22) AGC: 21 dB, (max)

23) Electronic Shutter: 1/60 to 1/600000 sec. (EIA)

24) Aperture Correction: Horizontal and vertical symmetrical

25) Video out: 1.0 volts peak-to-peak +/- 0.1 volt @ 75 Ohms

26) Programmable Controls Video level, shutter, AGC, BLC, Auto Black

d) Image Sensor-Lens

1) The camera lens shall be a motorized vari-focal 6.5-65mm with auto iris.

2) Image format: 1/3 inch

3) Focal length: 10X zoom (6.5-65mm)

4) Iris range: f 1.4 – Approx. 360 (With ND Spot Filter)

5) Focus range: 9.85mm (in air)

6) Back focus distance: 10.05mm (0.4in.) in air

7) Weight: 285g.

8) Lens mount: CS

9) Iris control: 4 pin DC control

10) Focus control: Motorized

11) Zoom: Motorized

e) Image Sensor-Housing

1) The environmental housing shall be an aluminum enclosure designed for outdoor CCD camera installations.

2) Temperature range -40 to +50 degrees C

3) Dimensions 449mm x 97mm x 112mm

4) Weight1.4kg

5) Housing mounting Three 1/4-20 tapped holes

6) Camera mounting Removable cradle assembly

7) Cable entry Three liquid-tight fittings that will accept cable diameters of:

   i) One fitting - 2 to 7 mm

ii) Two fittings - 3 to 10 mm

8) Finish: Off-white semi-gloss polyurethane

9) Construction: Extruded aluminum housing, Aluminum rear-end cap, Aluminum front cap with glass face plate, and Aluminum cradle. A sunshield shall be included

10) Window: 3 mm thick glass that includes a Thermostatically controlled window Heater/defogger strip

11) Rated input voltage: 115 VAC 60 Hertz

12) Voltage range: 108 VAC to 132 VAC

13) Output voltage: 24 VAC 60 Hertz

14) Nominal power: 30 Watts

15) Enclosure protection: Waterproof and dust-tight in a NEMA-4, IP65, enclosure Type 3

f) **Surge Protection**

1) A video surge suppressor(s) shall be available for installation inside the traffic signal controller cabinet. The suppressor shall provide coaxial cable connection points to an EDCO CX06-BNCY or approved equal transient suppresser for each image sensor.

2) Peak Surge Current (8 x 20 us) 20KA

3) Technology Hybrid, Solid State

4) Attenuation 0.1db @ 10Mhz

5) Response Time <1 nanosecond

6) Protection Line to Ground

7) Shield to Ground (isolated shield modules)

8) Clamp Voltage 6 volts

9) Connectors BNC

10) Impedance 75 Ohms

11) Temperature -40 to +85 degrees C

12) Humidity 0-95% non-condensing

13) Dimensions 4.5" x 1.5" x 1.25"

14) UL Listed UL 497B

g) Image Sensor-Mounting Brackets

1) Mast arm installations shall be mounted at a sufficient height to prevent occlusion from cross traffic between the stop bar and the mast arm on which the camera is installed. A 74" maximum length of internally reinforced, aluminum tube shall be attached to the mast arm bracket for camera mounting above the mast arm. Camera shall be mounted to the top of the tube with the camera manufacturers recommended bracket. Camera bracket shall provide adjustments for both vertical and horizontal positioning for the camera. Camera attachments shall be designed to securely fasten the camera to prevent the extension tube from falling into the path of vehicles and/or becoming loose. Mounting bracket must fasten to the Mast arm using a 64" or 82" aircraft cable. Miscellaneous hardware shall be stainless steel or galvanized steel. The cameras and associated pole/arm attachment unit shall be designed to withstand a wind load of 90 MPH with a 30-second gust factor.

2) Luminaire arm installations shall be installed on the luminaire arm, with the camera/video manufacturers recommended brackets. Camera luminaire brackets shall provide adjustments for both vertical and horizontal positioning of the camera. Camera attachments shall be designed to securely fasten the camera to the luminaire arm. Mounting bracket shall be made of aluminum. Miscellaneous hardware shall be stainless steel or galvanized steel. The cameras and associated pole/arm attachment unit shall be designed to withstand a wind load of 90 MPH with a 30-second gust factor.

h) Image Sensor-Cable (Coaxial & Power)

1) Coaxial & Power cable (Siamese) shall be installed in conduits or overhead as indicated in the plans. Coaxial cable shall be suitable for exterior use and in direct sunlight. Power cable will have a minimum of five (5) conductors.

	ELEMENT 1	**ELEMENT 2**
CONDUCTORS/PAIR COUNT:	5 CONDUCTORS	1 CONDUCTOR
GUAGE & STRANDING	18AWG7/26 BC	20AWG SOLID BC
PRIMARY INSULATION TYPE:	POLYETHYLENE	FOAM PE
INSULATION THICKNESS:	0.016"	0.056"
COLOR CODE:	WHITE, RED, BLUE, BLACK, BROWN	NATURAL
SHEILD:	N/A	N/A
TAPE:	N/A	N/A
DRAIN WIRE:	N/A	N/A
BRAID:	N/A	N/A
CAPACITANCE:	N/A	N/A

PRINT LEGEND:	N/A	N/A
JACKET TYPE:	N/A	POLYETHYLENE
JACKET COLOR:	N/A	BLACK
JACKET THICKNESS:	N/A	0.035"
NOMIMAL OD:	N/A	0.242"

2) A junction box on the camera bracket arm shall provide access to video and power cable terminations. No soldering shall be required in the field. Coaxial cable will terminate with a "barrel" style BNC connector and power shall be terminated via a small terminal strip or via "wire nuts."

3) Coaxial cable will be terminated in the surge suppressor before being connected to the VIP boards.

4) Power cable will be terminated into a fuse panel provided by the manufacturer and connected to 120 VAC in the controller cabinet.

5) Description of cable: Composite, 6 Conductors 2 elements: 18awg 5 conductors 7/26 bare copper, .016" polyethylene, 20awg 1 conductor, solid bare copper, 056" foam polyethylene jacket black, overall .030" PVC jacket black.

6) Overall Assembly Of Wire

JACKET THICKNESS:	0.030"
JACKET COLOR:	BLACK
JACKET MATERIAL:	PVC
RIPCORD:	YES
NOMINAL OD:	0.512"
VOLTAGE RATING:	600V
TEMP RATING:	75C
UL TYPE OR STYLE:	N/A
PRINT LEGEND:	TBD
PACKAGING:	TBA
COPPER WEIGHT:	39.87 LBS/MFT
SHIPPING WEIGHT:	100 LBS/MFT

i) Video Monitor

A monochrome monitor for viewing the video output from the video processor unit shall be provided in the controller cabinet irregardless of the programming method utilized by the equipment. Monitor shall have a minimum diagonal measurement of 9". Monitor resolution shall exceed the required camera resolution. Monitor shall be provided with connector and cable for connection to the video processor unit. Monitor shall be provided with front panel mounted controls for contrast, brightness,

vertical hold, horizontal hold and power on/off. Monitor shall be provided with 125 VAC power cord. Monitor shall fit on the shelf within the control cabinet without interference to control equipment.

III. Installation & Training

a) The product supplier of the video detection system shall supervise the installation and the testing of the video equipment. A factory certified representative from the manufacturer shall be on-site during installation. The factory representative shall install, make fully operational, and test the system as indicated on the intersection drawings and this specification.

b) Two days training shall be provided to personnel of the contracting agency in the operation, setup, and maintenance of the video detection system. Instruction and materials shall be produced for a maximum of 10 persons and shall be conducted at a location selected by the contracting agency. The contracting agency shall be responsible for travel, room and board expenses for its own personnel.

IV. Warranty

a) The video detection system shall be warranted against manufacturing defects in materials and workmanship for a period of two years from date of installation. The video detection supplier shall provide all documentation necessary to maintain and operate the VIP system.

b) Life expectancy of the video cameras and VIP boards shall be a minimum of five (5) years.

CONSTRUCTION. The Contractor shall install the video detection system at the designated intersection(s) and program the controller and cameras if necessary. The Contractor must notify the Engineer or his designated representative at least 2 days before the location is ready for acceptance testing. Acceptance testing must be scheduled and conducted in the presence of the Engineer or designated representative during normal work days (M-F 9:00 AM to 2:00 PM). The Contractor must demonstrate that the camera system is programmed and operating properly in order to pass the acceptance test. Upon completion of the acceptance test, a 15-day observation period will commence. Any failures during this period will be repaired within 2 days of the notification; and after repair, another 15 day observation period will begin.

MEASUREMENT AND PAYMENT. Video detection cameras will be paid at the Contract Unit Price per each on a per intersection basis as follows, and will include: video camera, housing, mounting brackets, tube extensions, an appropriate processor card or interface equipment, surge arrestors and fuse panel, connectors, video monitor (1 per intersection), connector cables, programming, aiming and calibration, and control pads to control the cameras and set-up the detection zones (1 set per intersection). Payment will be full compensation for installing video detection cameras and include all material listed in the above specification, labor, tools, equipment, acceptance testing, and 15-day observation periods in order to complete the work.

4-Video Detection Camera Intersection will be measured in units of each for the type specified and will be paid for at the contract unit price per each. This price shall include:

- Two 2-position VIP Cards
- Four Camera Assembly Packages
- Four Camera Mounting Assemblies, Mast Arm, Side of Pole, or Luminaire Arm as per the plans
- One Camera Interface Panel, 4-Camera, NEMA
- One 10-Pos Rack wired for ViewCom/E Expansion
- One Power Supply for 10-Pos Rack
- Ten BNC connectors
- One Programming Keypad
- One 9" Monitor
- One CT Zoom Lens Controller
- Software
- Transient protection
- Hardware
- Warranty
- Technical Support
- Aiming
- Programming and Calibration
- Mounting brackets, splices and connectors

3-Video Detection Camera Intersection will be measured in units of each for the type specified and will be paid for at the contract unit price per each. This price shall include:

- Two 2-position VIP Cards
- Three Camera Assembly Packages
- Three Camera Mounting Assemblies, Mast Arm, Side of Pole, or Luminaire Arm as per the plans
- One Camera Interface Panel, 3-Camera, NEMA
- One 10-Pos Rack wired for ViewCom/E Expansion
- One Power Supply for 10-Pos Rack
- Eight BNC connectors
- One Programming Keypad
- One 9" Monitor
- Software
- Transient protection
- Hardware
- Warranty
- Technical Support

2-Video Detection Camera Intersection will be measured in units of each for the type specified and will be paid for at the contract unit price per each. This price shall include:

- One 2-position VIP Cards
- Two Camera Assembly Packages
- Two Camera Mounting Assemblies, Mast Arm, Side of Pole, or Luminaire Arm as per the plans
- One Camera Interface Panel, 2-Camera, NEMA
- One 10-Pos Rack wired for ViewCom/E Expansion
- One Power Supply for 10-Pos Rack
- Six BNC connectors
- One Programming Keypad
- One 9" Monitor
- Software
- Transient protection
- Hardware
- Warranty
- Technical Support

1-Video Detection Camera Intersection will be measured in units of each for the type specified and will be paid for at the contract unit price per each. This price shall include:

- One 2-position VIP Cards
- One Camera Assembly Package
- One Camera Mounting Assembly, Mast Arm, Side of Pole, or Luminaire Arm as per the plans
- One Camera Interface Panel, 2-Camera, NEMA
- One 10-Pos Rack wired for ViewCom/E Expansion
- One Power Supply for 10-Pos Rack
- Six BNC connectors
- One Programming Keypad
- One 9" Monitor
- Software
- Transient protection
- Hardware
- Warranty
- Technical Support

Video Detection Camera Cable will be measured in units of linear feet and paid for at the contract unit price per linear foot. This price shall include the Siamese (coaxial and power) cable.

CATEGORY 800
TRAFFIC

SECTION 818 - SIGNAL STRUCTURES

DELETE: SECTION 818 – SIGNAL STRUCTURES in its entirety.

INSERT: The following.

DESCRIPTION. This work shall consist of furnishing and installing signal structures consisting of poles, post and pedestal shafts with anchor bases welded to the lower ends, complete with handholes as needed, handhole covers, pole caps, base covers, mast arm flanges and mast arms as needed, simplex fittings as needed, simplex fitting covers and all grommets, high strength bolts and miscellaneous hardware associated with proper installation.

Signal structures are defined as follows:

Steel Strain Poles,
Joint-Use Type Steel Strain Poles,
Multi-purpose Mast Arm Poles,
Galvanized Steel Mast Arm Poles,
Inner Harbor Type Steel Mast Arm,
Inner Harbor Type (Joint Use) Mast Arm Poles,
Steel Pedestal Poles.

MATERIALS

Pole Shaft	A 595
Post Shaft	A 53, A 595
Pedestal Shaft	A 53, A 595
Anchor Base	A 36
Mast – Arm Flange Plates	A 36
Mast – Arm	A 595
Bolts	A 325
Hardware	Type 304 SS
Galvanizing	A 153
Foundation	801
Grounding	804

Pole Shafts
Round pole shafts shall be fabricated from minimum 3 gauge sheet steel conforming to A 595 and shall have a minimum guaranteed yield strength of 55,000 p.s.i. Round pole shafts shall be uniformly tapered starting at the base and decreasing in diameter at a rate of not more than 0.14 inches per foot of length.

Square pole shafts shall be fabricated from minimum 7 gauge sheet steel conforming to A 595 and shall have a minimum guaranteed yield strength of 55,000 p.s.i. Square pole shafts shall be uniformly tapered starting at the base and decreasing in diameter at a rate of 0.11 inches per foot of length.

Anchor Base
The base shall be made of steel plate conforming to ASTM A-36 of the
proper strength to support the pole and its specified load. The center of the base shall have an opening of such diameter as to provide a slip fit for the shaft. The base shall be double welded, inside at the bottom and outside at the top. All welds shall meet the requirements of the AWS Structural Welding Code.

Handhole(s)
The shaft shall have reinforced opening(s) for handholes complete with cover plate(s) and stainless steel Type 304 fasteners as specified in the Contract Documents.

Ground Wire Connection
A method to connect a ground wire by means of a ½" bolt shall be provided at the handhole, 3/8" bolt for pedestals. No ground connection is required for push button posts.

Pole Cap
The top of the shaft shall be equipped with removable cast zinc or aluminum pole cap held securely in place by three stainless steel fasteners for round poles, four fasteners for square poles.

Simplex Fittings
Simplex fittings for joint use poles shall be provided as specified in the B.C. Standards and Contract Documents. A removable galvanized steel or aluminum cover plate shall be provided for each unused fitting.

Base Cover
The base cover shall be a two-piece cast aluminum or fabricated steel form, which is used to protect the anchor bolts and nuts. The manufacturer shall specify the method of fastening the base cover to minimize removal and theft. The cover shall provide for positive drainage of the base and allow venting of the pole. The finish shall be identical to the pole finish. Base covers shall be provided for Inner Harbor Type Mast arm Poles only.

Mast Arms
Mast arms shall be round or square, tapered steel with a uniform taper of 0.10 inches per foot. All mast arms shall be welded to form one continuous piece. Mast arms shall be connected to the support pole at the height necessary to provide sixteen-foot clearance under signals and three-foot high overhead signs. All mast arms shall include one clamp-type signal hanger and one wire outlet grommet for every eleven feet, or fraction thereof, of length. Mast arms shall have a removable cap at the tip. Guy rods or truss type arms will not be permitted.

Mast arms materials and fabrication shall conform to A 595, Grade A, with the exception that the shaft shall be round or square and tapered.

A flange plate is to be welded to the butt end to provide a rigid connection to the upright pole. Flange plate dimensions and bolt patterns shall be uniform for all mast arm lengths. A braided nylon line having a minimal tensile strength of four hundred pounds shall be installed in all mast arms from each signal location to the hand hole.

Welding
Pole Post and Pedestal Shafts, and Mast Arms shall not have more than one longitudinal weld per section which shall be ground or cold rolled smooth to a uniform finish and thickness. Butt welds will not be permitted within a continuous single section. All welds and transverse joints shall fully develop the ultimate strength of the pole. All welds shall meet the requirements of the AWS Structural Welding Code.

Galvanized Finish
Each structure shall be thoroughly cleaned inside and out, then hot dip galvanized to a minimum zinc thickness of 0.003 in. in accordance with A-123.

Design Loads For Mast Arm and Multi-Purpose Poles
All poles and mast arms shall be designed in accordance with the Contract Documents, AASHTO Standard Specifications for Structural Supports for Highway Signs, Luminaires, and Traffic Signals, for a 90 MPH wind zone. For joint use poles assume two street lighting luminaries per pole, aligned with the longest signal mast arm for either category of pole.

Marking
All poles and individual mast arms shall be permanently marked or labeled for identification. Poles designated for mounting single mast arms up to 24 ft. shall be labeled "LIGHT DUTY" on an aluminum plate riveted to the plate shaft. Poles designed for longer arms shall be labeled "HEAVY DUTY." Mast arm length shall be similarly labeled on the side of the mast arm.

Design Calculations
The manufacturer shall submit complete structural design calculations of all components including the loads applied to the foundation at the base plate level (i.e. axial load), overturning moment, and torsional moments. The professional seal of a registered structural engineer shall be on all structural design calculations and shop drawings.

CONSTRUCTION. The signal structure shall be installed on a concrete foundation conforming to the Contract Documents. Any finish on the signal structures and mounting hardware damaged during transportation and erection shall be repaired to match the original finish by and at the Contractor's expense and approved by the Engineer.

MEASUREMENT AND PAYMENT. Furnishing and installing of structures will be measured and paid for at the Contract unit price per each for the type of structure listed in the Contract documents, erected in place. The payment will be full compensation for the transportation and installation of all traffic signal poles, weather heads and duct seal, conduit, elbows, strapping, clips, brackets, mounting hardware, mast arms, twin mast arms, strain poles, pedestal poles, push button posts, breakaway base support systems, and for all material, labor, equipment, tools, and incidentals necessary to complete the work.

CATEGORY 800
TRAFFIC

BATTERY BACKUP SYSTEM FOR TRAFFIC SIGNALS

DESCRIPTION. This specification establishes the minimum requirements for a complete emergency battery backup system for use with Light Emitting Diode (LED) Traffic Signal Modules. The Battery Backup System (BBS) shall include, but not be limited to the following: Inverter/Charger, batteries, combination power transfer relay and manual bypass switch and all necessary hardware and interconnect wiring. The BBS shall provide reliable emergency power to a traffic signal system (Vehicle and Pedestrian Traffic) in the event of a power failure or interruption.

The BBS shall be capable of providing power for full run-time operation for an "LED-only" intersection (all colors: red, yellow, green and pedestrian heads), an intersection with only yellow and/or pedestrian incandescent bulbs or flashing mode operation for an intersection using Red LED's.

The BBS shall be designed for outdoor applications, in accordance with the Caltrans Transportation Electrical Equipment Specifications (TEES), dated August 16, 2002, Chapter 1, Section 8 requirements.

MATERIALS.

FCC Class A
IEEE 587/ANSI C62.41

CONSTRUCTION.

BATTERY BACKUP SYSTEM.

The BBS shall be a line interactive system which continuously regulates the AC input. If the input voltage is outside of a default or user selected range, the BBS will buck or boost the AC voltage, regulating the output voltage to the signal equipment. The BBS shall meet the following:

(a) BBS shall be compatible with NEMA, Caltrans Model 332A Cabinets, Model 170E Controllers, Model 2070 Controllers and cabinet components for full time operation.

(b) The BBS shall provide a minimum two (2) hours of full run-time operation for an "LED-only" intersection (minimum 700W/1000VA active output capacity, with 80% minimum inverter efficiency).

(c) When utilizing battery power, the BBS output voltage shall be between 110 VAC and 125 VAC, pure sine wave output, ≤ 3% THD, 60Hz ± 0.05Hz.

(d) The BBS DC system voltage shall be 24 Vdc.

(e) The BBS shall be equipped with Input and Output AC circuit breakers.

(f) The manual bypass switch module and power transfer relay shall be rated at 240VAC/30 amps.

(g) The maximum transfer time allowed, from disruption of normal utility line voltage to stabilized inverter line voltage from batteries shall be 65 milliseconds. The same maximum allowable transfer time shall also apply when switching from inverter line voltage to utility line voltage.

(h) BBS shall be equipped to prevent a malfunction feedback to the cabinet or from feeding back to the utility service.

(i) The BBS shall have lightning surge protection compliant with IEEE 587/ANSI C.62.41.

(j) The BBS shall be equipped with an integral system to prevent the battery from destructive discharge and overcharge.

(k) The Battery Backup System must be able to shutdown to protect against internal damage in the event of an overload at its output.

(l) There shall be two, user adjustable transfer point set types. The user will be able to select either "Normal" or "Generator" transfer points. The user will be able to set the low and the high cutoff transfer points which are adjustable between 89 and 135 AC volts. The BBS will automatically apply the 5 volt difference for the return transfer points.

(m) If the BBS is configured to use these adjustable transfer points (Buck/Boost is disabled), the BBS shall bypass the utility line power whenever the utility line voltage is outside of the set transfer points (± 2VAC).

(1) In cases of low (below the set low cutoff point) or absent utility line power, when the utility line power has been restored at or above 5 VAC ± 2 VAC of the set low cutoff point for more than 30 seconds (or the user configured line qualify time), the BBS shall transfer from battery backed inverter mode back to utility line mode.

(2) In cases of high (above the set high cutoff point) utility line power, when the utility line power has been restored at or below 5 VAC ± 2 VAC of the set high cutoff point for more than 30 seconds (or the user configured line qualify time), the BBS shall transfer from battery backed inverter mode back to utility line mode.

(n) The Buck/Boost function of the BBS shall have a range of 80-160Vac. There are not to be any user configurable transfer point settings for the Buck/Boost function.

(1) With Buck/Boost selected as the sense type, the output to the signal system will be regulated to voltages between 102-130 Vac.

(2) There will be a Buck and Boost event counter and run time meter accessible through the LCD and Ethernet. Buck and Boost events will be recorded

separately from each other. The counter and run time meter will show the cumulated information since the last reset.

(o) The BBS will have an adjustable line qualify time. The range will be from 1 to 60 seconds, in 1 second increments. The factory default setting will be 30 seconds.

Battery System. Upon loss of power from the public utility, the BBS shall utilize its battery power.

(a) Batteries used for BBS shall consist of 2 to 8 batteries to run the loads for the specified time, and a maximum system voltage of 24 VDC to comply with NEC Class 2 Voltage.

(b) Individual batteries shall be deep cycle, sealed prismatic lead-calcium based AGM/VRLA (Absorbed Glass Mat/ Valve Regulated Lead Acid) rated at 12 volts.

(c) Batteries shall be certified by the manufacturer to operate over a temperature range of – 25 °C to +74 °C.

(d) Batteries shall be easily replaced and commercially available off the shelf.

(e) The batteries shall be provided with appropriate interconnect wiring and corrosion-resistant mounting trays and/or brackets appropriate for the cabinet into which they will be installed.

(f) In the event of inverter/charger failure, battery failure or complete battery discharge, the power transfer relay shall revert to the NC (and de-energized) state, where utility line power is connected to the cabinet.

(g) The BBS shall be easily replaced by having easily removable AC input and output cables. The DC input connection shall be a one piece Anderson type connector. The external transfer relay control and battery temperature compensation cables shall be a quick release connector. The AC, DC, external transfer relay, and battery temperature compensation cables shall be removable without the use of a screwdriver.

Battery Charging.

(a) The BBS shall have an integral charger. The charger shall be a 3 step charger (bulk, accept, and float) with an automatic monthly restart.

(b) The charger shall have the capability of providing the charge current required by the battery. The user shall be able to select either "gel" or "AGM" type batteries. The default setting is for AGM.

(c) The BBS shall use a temperature-compensated battery charging system. The charging system shall compensate over a range of 2.5 – 4.0 mV/ °C per cell.

(d) The temperature sensor shall be external to the inverter/charger unit. The temperature sensor shall come with 2 meters (6'6") of wire.

(e) Batteries shall not be recharged when battery temperature exceeds 50 °C ± 3 °C. Recharge time for the battery, from "protective low-cutoff" to 80% or more of full battery charge capacity, shall not exceed ten (10) hours.

Cabling/Expansion.

(a) Interconnect wiring shall be via two-piece modular harness consisting of 8 gauge welding style cable, UL listed, super K90.
(b) Cable assembly shall be equipped with insulated, mating, power pole style connectors. Where two-piece power pole style connectors are used Positive (+) shall be red, and Negative (-) shall be black.
(c) All power pole connectors shall be assembled to ensure proper polarity and circuit configuration throughout the entire harness.
(d) Part one of the two-piece harness shall consist of seven inches of appropriate colored cable with ¼ inch ring terminals for connecting to the battery terminal and the appropriate colored modular power pole style connector.
(e) Battery terminals shall be covered and insulated with appropriate colored molded boots.
(f) Part two of the harness shall consist of mating two-piece power pole style connectors for connecting to the batteries and a single insulated power pole connector for connecting to the BBS unit.
(g) Cable length shall be a minimum of 12 inches between batteries and 60 inches between BBS unit and first battery.

Mounting.
All references made to EIA rail or EIA 19" (482.6mm) rack shall conform to Electronic Industries Standards EIA-310-B, Racks, Panels, and Associated Equipment, with 10-32 "Universal Spacing" threaded holes.

(a) Mounting method shall be shelf-mount or rack-mount. Front or rear mounted available rack space is 3U or approximately 6 inches.
(b) The Power transfer relay and manual bypass switch shall be mounted on the EIA rail or the cabinet shelf.
(c) All necessary hardware for mounting (shelf angles, rack, etc) shall be included in the bid price of the BBS. Bolts/fasteners and washers shall meet the following requirements:

(d) All interconnect wiring shall be provided between Power transfer relay and bypass switch and Cabinet Terminal Service Block and shall be no less than 2 meters of UL Style 1015 CSA TEW with the following characteristics:
(1) AWG Rating: 10 AWG
(2) Stranding: 105 strands of 30 AWG tinned copper

(3) Rating: 600 V, 105 °C, PVC Insulation

(e) Relay contact wiring provided for each set of NO/NC relay contact closure terminals shall be 3 meters of UL Style 1015 CSA TEW 18 AWG wire, same ratings as above, except 16 strands of 30 AWG tinned copper.

Environmental.

(a) Operating temperature for the inverter/charger, and power transfer relay and manual bypass switch shall be –40 °C to +74 °C.

(b) The BBS shall be shall be certified and field proven to meet or exceed NEMA temperature standards. A certificate of compliance shall be made available upon request.

Communications.

(1) The BBS shall have RS-232 communications for Windows based computers.

(2) The BBS shall have Ethernet communications as standard.

(3) The Ethernet communications shall be capable of 100 mbps.

(4) The Ethernet port shall have a user configurable IP address, subnet mask, and gateway.

(5) The BBS shall have an embedded web-server for configuration and system status.

a. Shall have a Configuration page that allows for configuration of; sense type, transfer points (normal and generator), line qualify time, Time of Day program, self test, and dry relay contacts

b. Shall have a Status page that shows the current settings of; sense type, transfer points, line qualify time, Time of Day program, self test, and dry relay contacts

c. Shall have a System page to configure; location, IP address, sub-net mask, and gateway address

d. Shall have an email page to configure which events trigger an email. It also shall allow input of up to 6 email addresses

e. The event log shall be able to be printed from the web browser. The event log shall also be able to be copied and pasted into an excel spreadsheet.

Display and Controls.

The BBS shall have a 4 line by 20 character backlit LCD display. The main screen shall indicate information regarding; transfer points, transfer point type, time of day status, utility input voltage, charger on/off status, battery percent of charge, battery voltage, BBS Mode, a scrolling line of text (which automatically lists any faults, alarms and relay status information), inverter event counter and run time meter. The run time meter shall indicate run time in hours and minutes.

(a) The BBS shall have a 4-way navigational keypad so that the user can navigate the menu system by using "↑", "↓", "←", "→", "Enter", and "Esc" keys. There shall also be an "Inv" key to turn the inverter on or off.

(b) The BBS shall have three status LED's.

(1) Green LED "Output" – This is to be on any time the BBS is providing output for either backup, buck, or boost modes.

(2) Red LED "Fault" – This is to be on any time there are any faults in the system.

(3) Yellow LED "Alarm" – This is to be on anytime there are alarms on the system.

(c) The BBS shall include a front-panel event counter display to indicate the number of times the BBS was in Backup, Buck, and Boost modes; and a front-panel hour meter to display the total number of hours and/or minutes the unit has operated in those modes since last reset. The run time shall be displayed in HHH:MM format. All meters shall be re-settable. The information displayed shall be cumulative since last reset.

(d) The BBS shall include a LCD display to indicate battery voltage and standard meter probe input jacks (+) and (-) to read the battery voltage externally.

(e) There shall be an event log that is 256 lines in length. Data shall be recorded in a FIFO format so that the oldest record is purged as the newest is entered. The event log shall date and time stamp all events. Each event that is recorded will also show the current operating mode of the BBS (Standby, Backup, Buck, and Boost).

(f) The BBS shall be equipped with a Time Of Day (TOD) program. The user can set the beginning and the end time of the TOD program. The user can also "Enable" and "Disable" the program. Operation is such that if the program is enabled and the BBS goes to Backup mode, the TOD program will energize any dry contact relays that are programmed for TOD. If the BBS is still in Backup mode and the TOD program has expired, any relay that was energized by the TOD program will de-energize when the TOD program expires.

(g) The BBS Configuration and System menus (on LCD, Ethernet, and RS-232) shall be password protected with a 6 digit alphanumeric password. The password feature can be disabled by the user in the System menu.

(h) The BBS shall have a "Self Test" feature. The self test feature can be programmed to either automatically run the test on the 1st or the 1st and 15th of each month. The user can program the start time of the test. The self test can also be immediately initiated by either LCD, Ethernet, RS-232, or by momentarily connecting the two self-test contacts on the terminal strip.

(i) All features shall be accessible from the keyboard on the BBS controller.

Dry Relays. The BBS shall provide the user with 6 programmable dry relay contacts.

(a) The dry relay contacts shall be rated for 3 amps @ 125 Vac.

(b) Each relay can be programmed to trigger by more than one condition simultaneously.

(c) If any relay is energized, it will show up on the main screen of the LCD, Ethernet web browser, and the RS-232 menu. The programming options are as follows:

(1) On Battery
(2) Low Battery
(3) Timer
(4) Time of Day
(5) Alarm
(6) Fault
(7) BBS Failure
(8) Off

(d) The BBS shall have a timer that will energize the dry contact relays (that are configured for "Timer") after the user configured time has elapsed. This timer is started when the BBS is in Backup mode. The user can configure the timer from 0 to 480 minutes, in 1 minute increments. The factory default setting is at 120 minutes.

(e) The BBS shall have an adjustable low battery relay setting. This setting shall be adjustable so that the user can set the point at which the low battery relay energizes. This setting applies to any dry contact relay that is configured for "Low Battery". This setting is adjustable from 0 to 100% of remaining usable battery capacity in 5% increments. This setting must be in percent. The factory default setting is 40%.

Quality Assurance. Each BBS shall be manufactured by an ISO 9001:2000 certified company in accordance with a manufacturer Quality Assurance (QA) program. QA process and test results documentation shall be kept on file for a minimum period of seven years. Each system shall be visually inspected for any exterior physical damage or assembly anomalies. Any defects shall be cause for rejection.

Warranty. Manufacturers shall provide a five (5) year warranty. During the first three years of the warranty, the manufacturer will send out a replacement unit within two business days of the call notifying them of an issue. The manufacturer will send out either a new unit or a re-manufactured unit that is fully tested and is up to the latest revision. The manufacturer is responsible for all shipping charges to the customer. The last two years of the warranty will be factory-repair warranty for parts and labor on the BBS.

Batteries shall be warranted for full replacement for two (2) years from date of purchase. The warranty shall be included in the total bid price of the BBS.

Training. Operational and Maintenance training for the entire system shall be provided to designated Administration personnel through the means of practical demonstrations, seminars, and other related technical teaching procedures. A minimum of 8 hours of instruction shall be provided. The training shall include the following:

(a) "Hands on" operation of all BBS hardware.
(b) Explanation of the complete repertoire of system functions.
(c) Instruction on required preventative maintenance procedures, and servicing procedures.

BBS FIELD EQUIPMENT CABINET.
The Contractor shall furnish and install a field equipment cabinet with each BBS. The Contractor may provide the cabinet, or it may be supplied by the BBS manufacturer with or without the equipment pre-installed in it. The cabinet shall be either a stand-alone design suitable for pad mounting or a side-mount design suitable for direct attachment to the existing traffic control cabinet, as indicated on the Plans or as directed by the Engineer. If of the stand-alone design, the cabinet shall be located as close as possible to the traffic signal controller cabinet.

MATERIALS.

CONSTRUCTION.

Cabinets: General

(a) Serial numbers, model numbers, the manufacturer's name and production date shall be clearly legible and permanently placed on all cabinets, battery back-up device mainframes and all removable printed circuit boards from the aforementioned equipment.
  (1) The use of adhesive backed labels is not acceptable.
  (2) Cabinet and mainframe labels shall be a minimum of 2.5 inches width and 0.75 inches height.
  (3) Mainframe serial numbers and model numbers shall be readable without disassembly or removal of any part of the cabinet or components located within the cabinet and located on the front face of the mainframe unit.
  (4) Cabinet serial numbers, model numbers, the manufacturer's name and production date shall be readable without disassembly or removal of any part of the cabinet or components and shall be located on the right upper cabinet interior side.
(b) All cabinets shall be provided with a vinyl print holder or approved equivalent, mounted on the inside of the cabinet door, suitable for holding a copy of the complete cabinet wiring diagram and other circuit diagrams that might be necessary to troubleshoot the entire cabinet assembly.
(c) A listing, indicating terminal numbers with a description of their use, shall be attached to the BBS cabinet door and overlaid with a clear, plastic covering. Edges of the plastic overlay shall be sealed with a clear waterproofing compound. Unless cable is passing through the cabinet uninterrupted, incoming and outgoing conductors shall have each wire connected to terminal post positions.

Cabinets: Mechanical. The cabinet shall house the batteries, wiring, and related equipment; and, the BBS, which includes converter/inverter/charger unit, power transfer relay, power management unit, manually operated bypass switch and other control panels and wiring harnesses. All cabinets shall meet the following:

- **(a)** All cabinets shall meet or exceed the requirements of a NEMA 3R rating and shall be UL listed as a unit.
- **(b)** All cabinet material shall be 5052-H32 tampered aluminum with a minimum one eighth of an inch (1/8 in.) thickness.
- **(c)** All mounting hardware and cabinet bracing shall also be made from aluminum.
- **(d)** All external welds shall be made using the Tungsten Inert Gas (TIG) welding method.
- **(e)** All welds shall be neatly formed and free of cracks, blow holes and other irregularities.
- **(f)** All inside and outside edges of the cabinet shall be free of burrs.
- **(g)** All cabinets shall have a rear sloped top surface to prevent the accumulation of water on the top surface of the cabinet.
- **(h)** Cabinets shall have a three (3) inches width flange inside the cabinet for anchor bolt and/or bottom plate mounting.
- **(i)** Cabinets shall have four (4) open end slotted anchor bolt openings one (1) inch diameter into the cabinet conduit entrance area in lieu of NEMA TS 2-1992 figure 7.7.3-1.
- **(j)** Cabinets shall be furnished with four (4) anchor bolts sized as per NEMA TS 2-1992 section 7.8.4.

Cabinet Sizes:

- **(a)** Stand-alone cabinets shall be a NEMA 3R rated with the approximate dimension of twenty-seven inches in width by thirty-nine inches in height by thirteen inches in depth (27" W x 39" H x 13" D). The top of the cabinet shall have a depth the necessary ventilation opening. Each cabinet shall be provided with an anchor bolt template.
- **(b)** Side-mount or "Piggyback" cabinets shall have the approximate dimension of twenty inches in width by forty eight inches in height by fourteen inches in depth (20" W x 48" H x 14" D). The top of the cabinet shall have a depth of sixteen (16) inches to provide the necessary ventilation opening. The cabinet shall be attached to the traffic control cabinet in at least two (2) points and be provided with an internal cabinet to cabinet wiring path.

Doors:
Cabinet doors shall provide full access to the cabinet interior and shall provide the following:

(a) All main cabinet doors shall be provided with a dust tight gasket. The gasket shall be 0.25 inches minimum thickness closed cell neoprene or silicone and shall be permanently bonded to the metal.

(b) If neoprene is used the mating surface of the gasket shall be coated with a silicone lubricant to prevent sticking to the metal mating surface.

(c) A gasket top channel shall be provided to support the top gasket on the main door.

(d) All access door openings shall have a double flange on all four sides.

(e) All cabinet doors shall be hinged on the right side as viewed facing the cabinet.

(f) Hinges shall be stainless steel and continuous.

(g) All cabinet door hinge pins shall be capped at the top and bottom by weld to render the pin tamper proof.

(h) Cabinets shall have a three point latching mechanism of the draw roller type.

- **(1)** The pushrods shall be turned edgewise at the outward supports.
- **(2)** The pushrods shall have a cross section of 0.25 inches by 0.75 inches.
- **(3)** The locks and handles shall be on the left of the main cabinet door.
- **(4)** The center latch cam shall be designed to allow only the door to open when the handle is moved towards the center of the door.
- **(5)** The pushrod end rollers shall have a 0.875 inches minimum diameter.

(i) All cabinets shall include a door restraint to restrict the door to a maximum one hundred and thirty-five degrees (135°) of swing in addition to stop positions specified in NEMA TS 2-1992 section 7.5.3.

(j) Cabinets shall be furnished with a dead bolt type version of the lock specified in NEMA TS 2-1992 section 7.5.4.3 and a key hole cover. The dead bolt lock shall be keyed for a "Number 2" key.

(k) Doors shall have a removable 3/8-inch Allen Wrench Lock in lieu of the door handle.

(l) Cabinets shall be provided with louvered vents in the front door with a removable air filter.

- **(1)** Louvers shall satisfy the NEMA Rod Entry Test for a 3R rated ventilated enclosure.
- **(2)** Cabinets shall have a "WASHABLE" filter sized sixteen inches in width by twelve inches in height by one inch in thickness (16" W x 12" H x 1" T). The filter shall not allow air to pass around the frame and shall be rated to capture 90% of 2 micron particles
- **(3)** The filter shall cover the vents and be held firmly in place with top and bottom brackets and a spring loaded upper clamp.

(m) Each cabinet shall be provided with a door open alarm input.

(n) One 18-inch interior flexible arm goose neck lighting fixture with a 25 watt incandescent lamp shall be wired to a 15-Amp ON/OFF toggle switch mounted to a door activated switch mounted near the top of the door. The lighting arm shall be mounted to the door, and when swung open the light shall illuminate the upper portion of the cabinet.

Interior:
The interior of cabinet shall be of sufficient size to provide adequate ventilation of the equipment housed therein. The cabinet shall contain at least two adjustable shelves or equivalent supports, with enough space to hold batteries, wiring and related equipment. Vertical mounting channels for the shelves shall allow for adjustable shelf placement ranging from 5 inches from the bottom to 5 inches from the top of the cabinet. Shelves and vertical mounting channels shall be heavy duty and have sufficient strength to hold the batteries without deforming, bending or breaking. Batteries shall not be installed directly on concrete foundations. Wiring panels and terminal blocks shall be neatly finished and clearly and permanently marked.

Cabinet Foundation:
If used, the cabinet foundation shall be installed in accordance with Baltimore City Department of Transportation (BCDOT) Standards.

Cabinets: Electrical.
If the stand-alone cabinet design is used, wiring from the BBS to the traffic signal controller cabinet shall be accomplished via a conduit passing through the BBS foundation, underground to a spare conduit in the traffic signal controller cabinet.

If the side-mount cabinet design is used, wiring from the BBS to the traffic signal controller cabinet shall be accomplished via an adequately sized and edge-protected opening in the side of the cabinet attached to the traffic control cabinet such that all wiring power and alarm wiring may be passed into the BBS cabinet.

Power:
The AC power interface shall be an independent panel design mounted in close proximity to the existing power panel or mounted within the BBS equipment cabinet with wires/connections passing between the two cabinets. The AC power interface shall provide the following:

(a) Easy relocation of incoming utility service wiring to the new panel power in terminal strip.
(b) A properly rated circuit breaker to control utility power state.
(c) A surge suppressor to protect the BBS.
(d) The wiring to the Manual Bypass Switch shall be integrated into this panel for incoming AC Power such that all wires are accessible within this panel on identified terminal strips that will allow for the maintenance of the equipment using only standard hand tools.
(e) The output AC power from the Manual Bypass Switch shall be terminated on the original incoming utility power service terminals.
(f) The panel shall be covered with plexi-glass or other approved material to minimize the risk of electrical hazards.

General:
The following shall be implemented/provided in all BBS equipment cabinets:

(a) Interface to traffic control cabinet (power and status/alarm).
(b) All conductor wire runs shall be continuous with no splices.
(c) Wiring for the lamp, fans and other auxiliary equipment shall be connected via terminal blocks.
(d) All wiring harnesses shall be encased in a continuous sheath. The use of cable ties to arrange wiring harnesses is not acceptable. The use of adhesive backed wire holders is also not acceptable. Conductors shall be neatly arranged and shall not obstruct access to other circuits and terminals in the cabinet.
(e) All cabinet back and panel harness wiring shall be soldered at its destination point as specified.
(f) All conductors shall be labeled. Labels shall be either attached to each end of the conductor and indicate the destination of the other end of the conductor, or shall be a continuous, permanent identification of the conductor's function and located every six inches along the conductor.
(g) All conductors used in the controller cabinet wiring shall conform to the following color code requirements.
  (1) AC Neutral conductors shall be identified by a continuous white color.
  (2) AC Ground conductors shall be identified by a continuous green color.
  (3) AC Positive conductors shall be identified by a continuous black color.
  (4) All other conductors shall be identified by any color not previously specified.
(h) All bolts used for electrical connections shall be fabricated from stainless steel.
(i) All hardware used for electrical connections and terminal facilities shall be fabricated using cadmium plated brass.
(j) All fuse holders shall be of the encased type.
(k) All switches shall be encased, environmentally sealed, and rated for one hundred and twenty-five percent of capacity. Switches and thermostats shall break the "hot" side of the line.
(l) Exhaust air will be vented out of the cabinet between the top of cabinet and the main access door via an exhaust plenum
  (1) The exhaust area shall be screened with a material having a 0.125 inches maximum hole diameter.
  (2) Two thermostatically controlled vent fans shall be mounted at the top of the cabinet onto an exhaust plenum.
  (3) The fan and thermostats shall be rated for one hundred and twenty-five percent (125%) of capacity.
    i. The fan bearing mechanism shall be of ball bearing design.
    ii. The fan shall have a minimum rated design life of one hundred thousand hours (100,000 hrs).

(4) The thermostat shall be adjustable from 80 degrees F to 130 degrees F.
(5) Degree markings shall be indicated on the thermostat in 10-degree increments.
(6) The fan shall be AC operated from the same line output of the Manual Bypass Switch that supplies power to the Traffic Signal Control Cabinet.
(7) A two position terminal block shall be provided on the fans panel. Proper over current protection shall be provided for the fan circuit.
(8) Fan thermostats shall be set so that one fan will operate at normal temperatures and the second fan will operate when temperatures exceed 95 degrees F.

Documentation. The BBS supplier shall provide three sets of operating manuals, service manuals, wiring diagrams, schematics, and maintenance instructions for all components of the BBS, including the cabinet. In addition, the BBS supplier shall provide a fourth set of schematics and wiring diagrams which shall be furnished in the wiring diagram holder in the controller cabinet. This documentation shall include:

(a) General Characteristics and Description
(b) Assembly and Installation
(c) Logic and Schematic Diagrams including Integrated Circuits. Schematics shall include a list of tests points with the following information provided for each point:
  (1) Nominal operating voltage.
  (2) Wave form and all pertinent information regarding the waveform at each test point.
  (3) Theory of Operation
  (4) Detailed Circuit Operation Description
  (5) Systems Operation with Block Diagram
  (6) Connection and I/O diagrams.
(d) Illustrated parts list with industry standard part numbers where applicable.
(e) Maintenance Operations
  (1) Alignment Procedures
  (2) Preventive Maintenance
  (3) Trouble Analysis
  (4) Trouble Shooting Sequence Chart
  (5) Voltage Measurements
  (6) Wave Forms

PROCEDURES. All conduits entering the cabinet shall be sealed and made waterproof, utilizing glad type fittings around all wires or an electrical atmosphere seal-off, (filled after final inspection) and all spare conduits capped using rubber gasket test seal plugs. No air shall be permitted to enter or exit the cabinet through the conduit system.
When installing BBS at an existing traffic signal controller cabinet location, the Contractor shall notify BCDOT a minimum of five days prior to beginning work. The traffic signal shall not be

disconnected from utility power unless a representative of BCDOT is present and then only during the time of day and day of week designated by BCDOT.

Upon completion of the installation, the Contractor shall notify BCDOT to arrange demonstration of the BBS. The Contractor shall demonstrate that the BBS is completely operational and shall demonstrate the various features available.

FOUNDATION. The foundation for the BBS shall be poured a minimum of 36 inches deep; the pad shall extend 1.5 inches larger than the outside cabinet dimension on all sides. A 1 inch chamfer will be used to drain water off the pad. Concrete shall meet or exceed Baltimore City Mix #2. Cost of removing pavement, forming and pouring the foundation shall be incidental to the cost for the BBS equipment cabinet (complete)

SAMPLE CABINET The contractor shall provide drawings and a sample cabinet for approval.

1) Detailed shop drawings will be submitted for review and comments by the City, changes will be incorporated into the cabinet design.
2) A sample cabinet will then be delivered to the City for evaluation and approval.
3) Cost of making minor modifications, creating and modifying drawings, freight and delivery costs to and from the vendor to the City shop are incidental to this pay item.
4) Sample cabinets will be delivered to:

Contact:	Mr. Paul Manik
Phone:	(410) 396-9065
Address:	1620 Rappolla Street, Baltimore, MD 21224
Hours:	8AM to 4PM weekdays by appointment only

MEASUREMENT AND PAYMENT. Battery Backup System shall be measured and paid for at the contract unit price per each, which shall include the complete Battery Backup System, NEMA 3R base mounted cabinet or Piggyback cabinet as indicated on the plans or as directed by the Engineer, all batteries and harnesses, installation, electrical work, grounding, training, concrete foundation, forming, excavation and sidewalk removal related directly to the cabinet foundation, conduit and wire seals, sample cabinet and shop drawings, freight and delivery charges and all other incidentals. The payment shall be full compensation for all materials, labor, equipment and all other incidentals necessary to complete this work.

CATEGORY 800
TRAFFIC

AUDIBLE/TACTILE PEDESTRIAN PUSHBUTTON STATION, SIGNS AND CABINET BASE UNIT

DESCRIPTION. This work shall consist of furnishing and installing self-contained Audible/Tactile Pedestrian Pushbutton Station and Signs, as specified in the Contract Documents or as directed by the Engineer.

MATERIALS. Audible/Tactile Pedestrian Pushbutton Station and Signs and all component parts shall meet the latest edition of the National Electrical Manufacturers Association (NEMA) Standards and Underwriters Laboratory (UL), as applicable

Serial numbers and model numbers, if available, shall be permanently engraved on all removable components and hardware. The serial number and model number shall be etched, stamped, molded, or attached using metallic self-adhesive labels. The use of adhesive backed paper labels is not acceptable.

CONSTRUCTION. Audible/Tactile Pedestrian Pushbutton Station and Signs shall be designed to mount near or at the bottom of the pedestrian display mounting post. The pushbutton assembly for the audible signal may replace or supplement an existing pedestrian signal pushbutton.

Audible/Tactile Pedestrian Pushbutton Station and Signs shall be designed as follow:

1) A single base unit at the traffic control cabinet shall control 2 to 12 (maximum of 3 per phase) push button stations.

2) Only 2 wires shall be required from traffic controller cabinet per each phase.

3) Each station shall have a 2-in. button with a tactile raised directional arrow on the button.

   i) It shall be possible to change the arrow direction to one of four directions.

   ii) Arrow/button shall vibrate during the walk period following a push of the button.

4) The push button station frame shall be cast aluminum with mounting holes for a 5 in. by 7.75 in. or larger pedestrian sign.

Audible/Tactile Pedestrian Pushbutton Station and Signs shall have the following features:

1) Locating tone.

2) 5 walk sound choices that shall be field selectable.

3) 3 pedestrian clearance sound choices that shall be field selectable.

4) A Direction of Travel message shall be standard with extended push.

5) An Information message shall be optional with extended push.

The audible sounds emitted by the Audible/Tactile Pedestrian Pushbutton Station and Signs shall have the following properties:

1) All audible sounds shall emanate from the push button station.

2) All audible sounds for all push button stations shall be synchronized.

3) Each audible feature shall have independently-adjustable minimum and maximum volume limits.

4) All sounds shall automatically adjust over a 60 dB range to compensate for ambient noise levels.

5) All volumes and optional features shall be settable using a handheld infrared device with password security. The infrared device shall be capable of updating/setting all push button stations, or the intersection from a single pushbutton station (Global updating).

6) The ability to mute sounds at all crosswalks except activated crosswalks.

The system shall have user-selectable multiple language capability. The system shall be able to play an emergency preemption message. The system shall be able to self-test its buttons and to report any faults to the traffic controller.

Warranty: Audible/Tactile Pushbutton Station and Signs shall be warranted by the Manufacturer for a period of 24 months from the date of delivery.

Compatibility Testing: Audible/Tactile Pushbutton Station and Signs manufacturers shall certify that their modules meet the Load Switch and Signal Conflict Monitor Compatibility testing requirements found in the most recent, formally-adopted version of the specification titled "Pedestrian Traffic Control Signal Indications - Part 2: Light Emitting Diode (LED) Pedestrian Traffic Signal Modules," published by the Institute for Transportation Engineers (ITE).

MEASUREMENT AND PAYMENT. Audible/Tactile Pedestrian Pushbutton Station and Signs will be measured and paid for at the contract unit price each. The payment will be full compensation for furnishing and installing the push button stations, signs, equipment specified, all cables, labor, and incidentals necessary to complete this work.

Audible/Tactile Pedestrian Base unit will measured and paid for at the contract unit price per each. The payment will be full compensation for furnishing and installing the Audible/Tactile Pedestrian Base unit and all cables, labor, and incidentals necessary to complete this work.

CATEGORY 800
TRAFFIC

REMOVAL, SALVAGE, DISPOSAL, PICK-UP AND DELIVERY OF TRAFFIC SIGNAL AND LIGHTING EQUIPMENT

DESCRIPTION. This work shall consist of removing, salvage, disposal, pick-up and or delivery of existing and proposed equipment: concrete, steel sub-base, foundation bases, structures, lighting fixtures, hardware, equipment and material which is no longer in use as part of a signal or street lighting system installation or modification.

MATERIALS. Not applicable.

CONSTRUCTION. The Contractor shall remove, salvage, disposal, pick-up and delivery of material and equipment as specified in the Contract Documents or designated by the Engineer. The Contractor shall tag all salvaged materials with the location and contract number. All salvaged materials shall be delivered in the same condition, as they existed in the field to Department of Transportation facilities between the hours of 9:00 am and 3:00 pm any City workday. The Contractor shall contact each facility 48 hours in advance to arrange pick-up and deliveries. The Contractor shall unload all material and place it in the area(s) designated at each facility listed below or as noted in the Contract Documents.

Traffic Signal Poles, Street Lighting Poles, Handbox frame and cover, Lighting Fixtures, Controller and or Cabinets, Signs, Signal Heads and Hardware:

The Contractor shall contact the Engineer one week prior to material removal to mark poles for disposal. The Contractor shall remove poles that have not been marked for disposal, vehicular and pedestrian signal heads, signs, mast arms, lighting poles and fixtures, and other related material and associated hardware and deliver to the appropriate facility list below:

The Contractor shall remove traffic signal pole and or cabinet bases to a depth twelve (12) inches below sub-grade, cut off anchor bolts, reinforcing steel, or remaining pole, dispose of all material, backfill voids with graded aggregate, compact the material, and patch the hole to match surrounding conditions and deliver to Department of Transportation facility located at:

3202 Southern Avenue
Baltimore, Maryland 21215
Phone # 443-984-1110

The Contractor shall remove electronic signal control and detection equipment, cabinets, and related hardware and deliver to the Department of Transportation facility at:
1620 Rappolla Street
Baltimore, Maryland 21224
Phone # 410-396-9065

The Contractor shall remove pole bases to a depth twelve (12) inches below sub-grade, cut off anchor bolts, reinforcing steel, or remaining pole, dispose of all material, backfill voids with graded aggregate, compact the material, and patch the hole to match surrounding conditions.

The delivery of existing lighting poles, fixtures and related hardware will be made to the Department of Transportation facility Gay Street Yard at:

1801 Southern Avenue
Baltimore, Maryland 21206
Phone # 410-396-9012

The Contractor shall remove handboxes, backfill the voids with graded aggregate, compact the material and reconstruct the sidewalk to the nearest tooled/expansion joint, or restore the area to surrounding conditions. The Contractor shall deliver hand boxes to the Department of Transportation facility located at:

1400 Leadenhall Street
Baltimore, Maryland 21230
Phone No. (410)396-1515

The Contractor shall remove and dispose of any other material including span wire, banner arms, plates, covers, cable rings, cable, bands, clips and items not specifically designated by the Engineer for salvage.

MEASUREMENT AND PAYMENT Removal, Salvage, Disposal, Pick-Up and Delivery of Traffic Signal and Lighting Equipment will be measured and paid for at the Contract unit price per lump sum basis. The payment will be full compensation for all materials, labor, equipment, tools, transportation, delivery and unloading of materials, removal of pole bases to a depth twelve (12) inches below sub-grade, cutting off anchor bolts/ reinforcing steel / remaining pole, disposal of all material, backfilling voids with graded aggregate, compacting the material, patching the hole to match surrounding conditions, and for any incidentals necessary to complete the work. Any loss in value of salvaged materials due to damage or misplacement by the Contractor will be deducted from the Contractor's payment. A list of all removed and salvaged equipment shall be provided to the engineer

Graded aggregate shall be paid for by the graded aggregate base for maintenance of traffic bid item.

Lump sum payment will also include removal, salvage, disposal, pick-up, transportation and delivery, and unloading of all existing, proposed and temporary materials, structures, and equipment.

CATEGORY 800
TRAFFIC

CATALOG CUTS AND WORKING DRAWINGS

DESCRIPTION. This work shall consist of the Contractor preparing and transmitting submittals to demonstrate the performance of the work will be in accordance with the Contract Documents. Submittal schedules, catalog cuts, shop drawings, installation methods, manufacturer's certifications, photometric data and working drawings shall be furnished on all Contractor furnished items for highway signing, sign lighting, highway lighting and traffic signals. Stakeouts of the sign locations shall be submitted for all sign structure locations as specified in the Contract Documents

MATERIALS. Not Applicable.

CONSTRUCTION

Submittal Requirements. Submittals shall be scheduled and coordinated with the Contractor's construction schedule. A complete submittal schedule and list of required submittals shall be submitted with the first submittal, but no later than three days after the pre-construction conference. The schedule for submission of submittals shall be arranged so that related equipment items are submitted concurrently.

The Engineer may require changes to the submittal schedule to permit concurrent review of related equipment. Shop drawings for closely related items such as a sign and its support structures shall be submitted together.

Submittal Documents. Contractor's drawings shall be neat in appearance, legible and explicit to enable proper review to ensure Contract compliance. They shall be complete and detailed to show fabrication, assembly and installation details, wiring and control diagrams, catalog data, pamphlets, descriptive literature, and performance and test data. They shall be accompanied by calculations or other sufficient information to provide a comprehensive description of the structure, machine or system provided and its intended manner of use. If the Contractor's drawings deviate from the Contract Documents, the Contractor shall so advise the Engineer in writing with the submittal and state the reason therefor.

No portion of the work requiring a Contractor's drawing shall be started nor shall any materials be fabricated, delivered to the site, or installed prior to the approval or qualified approval of such item. Fabrication performed, materials purchased or on-site construction accomplished which does not conform to approved Contractor's drawings shall be at the Contractor's risk. The City of Baltimore Department of Transportation will not be liable for any expense or delay due to corrections or remedies required to accomplish conformity.

Shop drawings shall show types, sizes, accessories, layouts including plans, elevations and

sectional views, component, assembly and installation details, and all other information required to illustrate how applicable portions of the Contract requirements will be fabricated and installed. In case of fixed mechanical and electrical equipment, layout drawings drawn to scale, shall be submitted to show required clearances for operation, maintenance and replacement of parts. Manufacturer's certified performance curves, catalog cuts, pamphlets, descriptive literature, installation and application recommendations, shall be provided and indicate conformance to the Contract Documents. Certifications shall be originals. Certification shall be sent to the Baltimore City Department of Transportation, Construction Inspections Department as required in the Contract Documents.

Manufacturer's catalog, product and equipment data shall be certified and shall include materials type, performance characteristics, voltage, phase, capacity, and similar data along with wiring diagrams when applicable. Indicate catalog, model and serial numbers representing specified equipment. Provide complete component information to verify all specified required items. Installation recommendations and instructions shall provide written Manufacturer's detail step by step preparation and installation of the materials, and products including recommended tolerances and space for maintenance and operation.

Catalog cuts for sign luminaires shall have photometric data attached for each sign to be illuminated. Photometric printouts shall include the sign number, the illumination on a one foot square grid covering the entire sign face, the average illumination, the maximum to minimum uniformity ratio, and a working drawing for the sign face attached.

Catalog cuts for roadway luminaires shall have photometric data attached as specified in the Contract Documents.

The Contractor shall submit working drawings as required for changes, substitutions, contractor design items, and Contractor designed methods of construction. Requirements for working drawings will be listed in appropriate Specification Sections and in Special Provisions. Drawings shall be accompanied by calculations or other information to completely explain the structure, machine or system described and its intended use. Review and approval of such drawings by the Engineer shall not relieve the Contractor from his responsibility with regard to the fulfillment of the terms of the Contract.

Working drawings and calculations as submitted shall be sealed, dated and signed by a Professional Engineer registered in the State of Maryland.

The review and approval of Contractor's drawings by the Baltimore City Department of Transportation shall not relieve the Contractor from his responsibility with regard to the fulfillment of the terms of the Contract. The Contractor shall be responsible for the verification and accuracy of all dimensions and insuring that all Contractor furnished items are compatible, and conform to all design and performance criteria.

All risks of error and omission are assumed by the Contractor and the Engineer will have no responsibility therefor.

Submittal Process. Each Contractor's drawing submitted by the Contractor shall have affixed to it the following Certification Statement, signed by the Contractor:

"By this submittal, I hereby represent that I have determined and verified all field measurements, field construction criteria, materials, dimensions, catalog numbers and pertinent data and I have checked and coordinated each item with other applicable approved drawings and Contract requirements."

With the first submittal, submit a Contractor's submittal schedule, listing by Specification Section number, all submittals required and approximate date submittal will be forwarded.

Each submittal having catalog descriptions, shop drawings, working drawings, photometric data, manufacturer's certifications, method of construction and manufacturer's installation recommendations shall be submitted for approval to:

Department of Transportation
Construction Management Divisions
417 E. Fayette Street
Baltimore, Maryland 21202

Each submittal shall have a transmittal page that indicates the Contractor and Subcontractor's address and phone numbers. Submittals containing multiple items need the identification only on the exterior of each package. For original submittals, and each subsequent resubmittal that may be required, six (6) copies will be submitted for projects administered by the City of Baltimore. A separate copy shall be forwarded to the Engineer.

All submittals for approval shall have the following identification data, as applicable, contained thereon or permanently adhered thereto.

1. Drawing title, drawing number, revision number, and date of drawing and revision.
2. Applicable Contract Drawing Numbers and Specification Section and Paragraph Numbers.

The first page of every catalog description, working drawing and material certification shall be stamped in red with the following. All pertinent Contract Document information shall be filled in the spaces provided.

CITY OF BALTIMORE	
SUBMITTAL PACKAGE #_____ DATED	
CONTRACT # _____ LOCATION	
PROJECT DESC.	
ITEM # _____ THIS ITEM CONTAINS_____ PAGES	
ITEM DESCRIPTION	
☐ ACCEPTED	
☐ ACCEPTED AS NOTED	
☐ REJECTED - REVISE & RESUBMIT	
REVIEWERS NAME	DATE

The Contractor shall indicate the submittal package by sequential numbering and date of submittal. Catalog, product data or brochure submittals containing various products, sizes and materials shall be underscored or highlighted to indicate the salient features required to meet the specifications. Likewise, items not applicable to the Contract shall be marked "not applicable" or crossed out.

If one or more of the items in a submittal are not approved, resubmittal of only the unapproved items is required, highlighted to show the particular item being resubmitted. Resubmittals shall bear original submittal number and be lettered sequentially.

Three copies of all Contractors' drawings will be returned to the Contractor.

Each submittal shall be in accordance with the Contractor's submission schedule. Allow thirty days for checking and appropriate action by the Engineer.

Contractor's submittals will be returned, marked with one of the following classifications:

ACCEPTED: no corrections, no marks.

ACCEPTED AS NOTED: a few minor corrections. Item shall be installed in accordance with the corrected drawings.

REJECTED - REVISE & RESUBMIT: requires corrections or is otherwise not in accordance with the Contract Documents. No items shall be fabricated. Correct and resubmit drawings as per original submission. Allow thirty days for checking and appropriate action by the Engineer.

MEASUREMENT AND PAYMENT. Catalog cuts, manufacturer's certifications, photometric data and working drawings will not be measured but the cost will be incidental to the pertinent items specified in the Contract Documents.

CATEGORY 800
TRAFFIC

UTILITY CONNECTIONS AND UTILITY STAKEOUT

DESCRIPTION. This work shall consist of utility connections, and utility stakeout, as specified in the Contract Documents or as directed by the Engineer.

CONSTRUCTION. The Contractor shall arrange a meeting with the utility company representatives and Traffic Maintenance Division representatives and the City Engineer as specified in the Contract Documents to establish a schedule for utility connections before any equipment or material is installed.

The Contractor shall not disconnect, de-energize, reconnect, tamper with, or otherwise handle any of a utility company's facilities. The Contractor shall be responsible for the utility service connections to the utility company's supplied point of service.

The Contractor shall make the necessary arrangements with the utility companies to insure having needed utilities available at the time of turn on. Any utility energization, connection or disconnection delays will not be considered a valid reason for any work time extension claim. Difficulties in securing utility company services are to be reported to the Engineer at the earliest possible time.

Utility Stakeout. The Contractor shall notify the appropriate agencies listed in the Contract Documents a minimum of 72 hours (excluding weekends and holidays) prior to the Contractor's anticipated beginning of any underground work.

The Contractor shall plan the work to minimize interference with any existing traffic control devices.

Existing equipment shall remain in it's original condition until the new equipment has been completed, satisfactorily tested and its operation accepted by the Engineer.

MEASUREMENT AND PAYMENT. All utility company energization, connection or disconnection costs will be the responsibility of the City of Baltimore.

Utility Stakeout. Utility Stakeout will not be measured but the cost will be incidental to other pertinent items specified in the Contract Documents.

CATEGORY 800
TRAFFIC

TEMPORARY STREET LIGHTING

DESCRIPTION. The Contractor must maintain existing lighting until the new lighting system is illuminated. In the event that existing lighting cannot be maintained prior to illumination of the new light system or the existing system requires rewiring, the Contractor shall design and install a temporary lighting system. This work shall consist of submitting plans, furnishing, installing and removing a temporary lighting system. The Contractor shall design the system and submit plans to Mr. Suresh Bhatt for his approval at 417 East Fayette Street, 7th Floor, Baltimore Maryland 21202, (410) 396-6946. The temporary lighting system shall be in operation until the proposed lights are installed and/or the existing lights are rewired, and as applicable, are connected to the power source and operational.

MATERIALS. As required for the Contractor's designed system and approved by the City of Baltimore.

EXECUTION. Upon completion of the proposed lighting, the Contractor shall remove all temporary lighting poles, wires, and related appurtenances. The temporary lights shall not be removed until the permanent lights are installed, operational, tested and accepted by the City.

MEASUREMENT AND PAYMENT. Temporary Street Lighting will not be measured but will be paid as Lump sum. The payment will be full compensation for designing, furnishing all materials, temporary power sources, installation, labor, equipment, tools, operation and removal of the temporary lighting system and all incidentals necessary to complete the work. All wiring within the pole, fuse kits, temporary connections to the overhead system and tying into the buried conduit, if approved by BGE and the City of Baltimore, shall be considered incidental to this item. The payment will also include all fees associated with temporary connections performed by BGE and/or the City to power the temporary system, if applicable. All materials will remain the property of the Contractor upon removal. This work also includes the restoration of the area including backfilling, seeding and mulching as necessary.

CATAGORY 800
TRAFFIC

DISCONNECT, PULL BACK, AND RE-ROUTE EXISTING CABLE

DESCRIPTION. Work shall consist of re-using existing electrical, communication, and traffic signal cables, by disconnecting the cable from an existing connection or location, pulling back the cable to a specified point, re-routing the cable through the new conduit system to a new or modified location or new equipment, and re-labeling and connecting the cables as specified by the Contract Documents or as directed by the Engineer.

If any existing cable which is specified to be disconnected, pulled back, and re-routed is of insufficient length for proper termination in the new location, a new cable shall be installed from its new location (traffic signal cabinet) to its point of origin. Permanent underground or above ground splices will not be allowed to facilitate re-routing of any cables.

MATERIALS. Miscellaneous connectors, electrical tape and cable supports.

MEASUREMENT AND PAYMENT. Disconnect, Pull Back, and Re-route Existing Cable will be measured and paid for at the Contract unit price per linear foot of each cable which is relocated. The payment will be full compensation for all miscellaneous material, connectors, electrical tape, cable supports and for all material, labor, equipment, tools, and incidentals to complete the work.

In the event of an existing cable of insufficient length, the new cable will be measured and paid for as per the applicable bid item in Section 810.

CATEGORY 800
CATEGORY TRAFFIC

WATER AND SANITARY SEWER

DESCRIPTION.

When the existing water and/or sanitary sewer service connections pose conflict with the proposed utilities, the Contractor may be requested by the Engineer to relocate the existing water and/or sewer service.

MATERIALS.

1. Ductile iron pipe
   a. Pipe shall be manufactured in accordance with the requirements of AWWA C151 except that the metal thickness shall be as described herein. Pipe nominal lengths may be eighteen to twenty feet (18' to 20') and shall include all jointing materials.
   b. All pipe and fittings shall be designed and constructed to withstand all external pressure caused by overburden as indicated on the profile and traffic loads to which the pipe may be subjected.
   c. All ductile iron pipe shall be Class 54 except where used to replace an existing service connection. All ductile iron pipes will be designed for a Type 1 laying condition, unless otherwise specified in the Contract Documents.
   d. Unless otherwise specified, outside diameter of ductile iron plain end pipe shall be the same as for mechanical joint cast or ductile iron pipe.
2. Joints
   a. Joints may be mechanical, flanged or rubber gasketed push-on type. Unless otherwise noted all joints shall in accordance with AWWA C111. Provide all joint accessories, as required, to connect to plain end of push-on joint pipe or cut pipe.
   b. Flanged joints shall meet the requirements of AWWA C115 and as supplemented herein. Flange bolts, nuts, and washers shall be carbon steel ASTM A307, Grade B with good, sound, well fitting heads. Nuts shall be cold punched, hexagonal, trimmed, and chamfered. Heads, nuts, and threads shall be ANSI B1.1. Bolts shall project one quarter-inch (1/4") beyond the nut when the joint with the gasket is assembled. Gaskets shall be full faced, one-eighth inch (1/8") thick rubber.
3. Fittings
   a. Fittings forty-eight inches (48") and smaller diameter shall be mechanical joint bell, ductile iron in accordance with AWWA C153 for compact

fittings sizes four inches to sixteen inches (4" to 16"), including dimensions and weights.

b. Fittings fifty-four inches (54") and larger diameter shall be push-on bell, ductile iron, proprietary restrained joints in accordance with AWWA C153.

c. Fittings shall be designed and constructed to withstand a pressure not less than as specified in AWWA C 153 or for the adjacent pipe, whichever is greater.

d. Provide exterior asphaltic coating per AWWA C-110 and interior double thickness cement mortar lining and seal coated inside in accordance with AWWA C-104; or provide interior and exterior fusion bonded epoxy coating, six to eight (6-8) mil in thickness, conforming to AWWA C116.

e. The cast markings required in AWWA C153, clearly mark on each fitting the year, month and date cast, and number of lot.

f. The gasket dimensions shall conform to the dimensions and tolerances per AWWA C111 Section 11-8 or with special designs and/or shapes shall meet the performance requirements of AWWA C111 Section 11-10. The size, mold number, gasket manufacturer's mark, manufacturer's country, the letters MJ and the year of manufacture shall be molded or permanently marked on the gasket. The molded markings shall not be on the sealing surface.

g. When flange fittings or connecting pieces are required, they shall meet requirements of AWWA C153. Flanges shall be cast integrally with body and shall have the same thickness over their entire circumference. Faces shall be perpendicular to axis of pipe. Bolt holes shall be equally spaced and shall straddle the centerline of the fitting. Provide all joint accessories required.

h. All fittings shall be complete with all joint accessories, rubber gaskets, bolts and nuts.

4. Joint Restraint

a. Restrained joint pipe and fittings shall be of the pipe manufacturer's standard design for ductile iron, and steel pipe and fittings. Unless otherwise noted, pressure ratings for pipe harnessing components shall not be less than the pipe working pressures. All rubber gasketed push-on type restrained joints should only be provided by manufacturer or suppliers who are authorized and licensed by the manufacture and they should be designed applied handled and installed in strict accordance with DIPRA and the pipe manufacturer's recommendations. Push-on joint ductile iron pipe with proprietary restraint shall be as follows:

1) For pipe thirty-six inches (36") and smaller in diameter: Contact Department of Public Works, Water and Waste Water Engineering Division for the approved list of manufacturers.
2) For pipe forty-two inches (42") and larger diameter: Contact Department of Public Works, Water and Waste Water Engineering Division for the approved list of manufacturers.

b. Retainer glands for restraint of mechanical joint, ductile iron pipe twenty-four inches (24") and smaller diameter shall be designed to fit standard mechanical joint bells conforming to AWWA C111. Glands shall be manufactured of ductile iron conforming to ASTM A536 with a restraining mechanism of size and arrangement per manufacturer's recommendations, of the following type:

1) Ductile iron wedges in combination with special, heat treated set screws with or without twist off nuts, torqued per manufacturer's recommendation; or
2) Hardened steel set screws with knurled and cupped points, with or without twist off nuts.
3) Retainer glands shall, at a minimum, meet the working pressure ratings for the pipe.
4) Contact Department of Public Works, Water and Waste Water Engineering Division for the approved list of manufacturers.

c. Rod for tie rod assemblies shall meet the material requirements of ASTM A 193, Grade B7, and shall be threaded for at least eight inches (8") on both ends. Rod shall be three-quarters of an inch (3/4") diameter unless otherwise noted. Nuts shall meet the requirements of ASTM A 194. Manufactured tie rod and accessories shall result in the completed restrained joint assembly having a minimum working pressure rating of two hundred (200) psi. Steel for strapping and harnessed joints shall be minimum three-quarters of an inch (3/4") diameter and meet requirements of ASTM A588 and A307. All nuts and bolts and harness tie rods shall be steel, zinc plated with an epoxy or nylon coating, or ANSI 304 Grade Stainless Steel. T bolts, harness tie rods, coupling bolts, flanged joint bolts, etc. shall be designed to provide at least one (1) complete thread projecting beyond the nut when properly tightened. Any such threaded unit that fails to meet this requirement shall be replaced at no additional cost to the City.

5. Fire hydrants shall be compression type, hand operated, for fire protection service under a minimum operating pressure of two hundred (200) psig manufactured per AWWA C502.

a. All fire hydrants furnished shall be tested to four hundred (400) psig operating pressure.

b. The manufacturer shall be regularly engaged in the design, manufacture and maintenance of fire hydrants. The manufacturer must furnish satisfactory evidence of adequate facilities for furnishing repair parts for hydrants furnished.

c. Hydrant Models-as preapproved by the Department of Public Works, Water and Wastewater Engineering Division.

d. AWWA C502 is modified or supplemented as follows:

1) The basic design shall be the dry top type, which prevents the operating threads from coming in contact with the water service. It shall be of the compression type, opening against the pressure and closing with the pressure.
2) The operating threads shall be contained in the opening chamber sealed the top and bottom with an "O-Ring" seal. The chamber shall contain a lubricating grease or oil. The operating nut shall be one (1) piece brass or bronze.
3) Main valve opening of the hydrant shall be not less than five and one-quarter inch (5-1/4") for a three (3) way hydrant.
4) Main valve seat shall be made of bronze and threaded into a bronze bushing in the hydrant base to preclude galvanic corrosion between dissimilar metals. The upper valve plate shall also be made of bronze (see ASTM B 584).
5) A stop limiting device shall be incorporated in the operating head only if a positive stop is not located in the interior of the shoe casing.
6) There shall be a minimum of two (2) bronze drains and two (2) bronze drain outlets located at least ninety degrees (90°) apart. When the hydrant is pressurized and in the closed position, it shall drain through the two (2) drains and outlets at the following rate:

   Q =1.29*SQR(P), where Q =gpm, P =psi, and SQR =square root
7) The hydrant shall be so designed to permit the removal of all the working parts along with the main valve and drain valve facings from the hydrant up through the barrel without disturbing the earth around the hydrant section; the removal of the seat ring shall be accomplished with the use of a thirty inch (30") maximum length seat removal key
8) Hydrant barrel shall be a traffic model made in two (2) sections with the flange or adjusting feature located approximately two inches (2") above the ground line. The main valve stem shall be made in two (2) sections with a breakable coupling. There shall be a minimum of eight (8) nuts and bolts connecting the upper barrel and the lower barrel, at the traffic/safety flange. The fire hydrant must be installed as shown on the Baltimore City Details.

9) The operating nut, hydrant nozzles, direction of opening and painting shall be in keeping with those hydrants already in the system. The size of the pentagon nut shall be one and seven-sixteenths of an inch (1-7/16"), point to flat. The height of the nut shall not be less than one inch (1 ").
10) Outlet Nozzles: Two (2), two and one-half inch (2-1/2") nominal 1.0. hose nozzles; one (1), four inch (4") nominal 1.0. steamer or pumper connection. Threads for two and one-half inch (2-1/2") nozzles per National Fire Standard Hose Coupling Screw Threads; threads for four inch (4") steamer or pumper connection shall be as specified for Baltimore City latest revision 1/15/75), Drawing No. W-115 H-37242.
11) All lower standpipes shall be made of ductile iron or ASTM A-126 gray iron.
12) The interior of the shoe casing and all lower main valve components shall be protected with an epoxy coating that is in full compliance with AWWA C-550.
13) Painting: Above grade line, outside of hydrant shall be painted with two (2) coats of zinc chromate primer and two (2) finish coats of a bright or Safety Orange enamel.
14) Manufacture's origin shall be cast into the bonnet or upper barrel of the fire hydrant.
15) All hydrants shall be shop tested in accordance with AWWA Specification C-502.
16) Bury Length four and one-half foot (4-1/2') or at a height that will require no fire hydrant extensions and meets the required height stated above, unless directed differently by the Engineer
17) Between elbow and top cap, the barrel shall be made in two (2) parts connected by a swivel segment to permit facing the nozzles in any direction. Bonnet shall be bolted to the standpipe and shall have cast on the top an arrow and the word "Open" indicating the direction for opening.
18) Hydrant Top: Hydrants shall be permanently lubricated and require one (1) man maintenance, no special tools.
19) Direction of operating nut rotation to open: Left (counterclockwise).
20) Gaskets and "O"-rings: Material shall be rubber composition; asbestos prohibited.
21) Hydrant Inlet: Boot side inlet shall be six inch (6") mechanical joint with accessories (glands, plain rubber gaskets, bolts and nuts, restrained lug or grip ring).
22) Cap chains: Hose cap chains and steamer cap chains are required with all hydrants; chain links (zinc plated steel) shall be fabricated not less than one-eighth inch (1/8") in diameter and with S hook device (zinc plated steel) attached.

6. Gravel or crushed stone for hydrant foundation shall meet the gradation requirements of AASHTO M-43 No. 67.
7. Water Services for three-quarter inches (3/4") through two inches (2") shall be soft copper tubing as follows:
   a. Copper pipe shall be seamless, type K annealed and meet the material, chemical and mechanical requirements of ASTM B 88.
   b. Copper pipe and fittings: Fittings shall be copper meeting requirements of ASTM B62 and shall meet requirements of AWWA C800. Copper to copper couplings shall be those known as the two part type consisting of a tubing connection, a coupling nut and a friction ring. The copper tube end of the couplings shall be the large type for three-quarters of an inch to one inch (3/4" to 1") services and for one and one-half inch to two inch services; compression type fitting should be used for connecting to type K copper service pipe. The opposite end, and all couplings nuts shall be threaded in accordance with AWWA C800. The iron end of all copper to iron pipe fittings shall be threaded in accordance with American National pipe threads. Copper and brass fittings shall be standard seamless threaded reamed and chamfered, and of the proper size required. The brass fittings shall be 85-5-5-5 Red Brass.
8. Corporation stops with flared coupling nuts shall be shall be preapproved by the Water and Waste Water Engineering Division.
9. Outside meter settings: All fittings, yokes, and appurtenances shall be preapproved by the Water and Waste Water Engineering Division and shall be provided and installed by a contractor as specified in the Details.
10. Pipe couplings for four inch (4") or larger meter settings shall be a stab type coupling as preapproved by the Water and Waste Water Engineering Division.
11. Tapping saddles shall be manufactured of bronze with double bronze straps. Bronze saddles shall meet all applicable requirements of ANSI/AWWA C800. All saddles must meet a minimum of two hundred (200) psi working pressure.
12. Portland cement concrete for cast in place meter vault lids and bases shall be as specified in the Details.
13. Concrete reinforcement shall be as specified in the Contract Documents and Details. Precast meter vaults shall be precast concrete vaults of the size indicated on the Details or as approved by the Water and Waste Water Engineering Division.
14. The prefabricated meter vaults shall also comply with the following:
   a. Prefabricated water meter vaults shall be furnished with a standard Meter Frame and Cover as shown on the Details.
   b. The meter setting shall be furnished with a ball angle valve on the outlet and inlet sides of-the setting.
   c. The ball angle meter valves shall be as shown on the Detail to assure interchangeability of City standard meters.
15. Brick and concrete masonry units for meter vaults shall be as specified in 863.03.

16. Sanitary sewer service PVC pipe six inch (6") through fifteen inch (15") diameter shall meet the material requirements of ASTM D-3034, wall thickness classification SDR 35 or ASTM F-789, wall thickness T-1. Fittings shall meet or exceed ASTM D-1784, ASTM D-3034, ASTM D-3212-76, and ASTM F-477 Specifications. Use of SDR-35 PVC pipe and fittings will not be allowed when the depth of cover exceeds fifteen feet (15'). Joints shall be elastometric gasketed, per ASTM F-477.
17. Cast iron soil pipe and fittings for sanitary house connections outside the public right-of-way or on risers shall meet material requirements of ASTM A 74, service weight or heavier with leaded, mechanical, or gasketed joints. Cast iron caps are required for all sanitary house connections and shall meet the material requirements of ASTM A 74. Use of Traffic Bearing Cleanout Cover Assembly is required in paved areas.

CONSTRUCTION.

1. Pipe delivery and distribution shall be scheduled to provide minimum interference with required maintenance of traffic. Pipe delivery shall be coordinated with pipe installation as directed.
2. Ductile iron pipe, fittings, valves and appurtenances shall be unloaded, handled and stored in accordance with AWWA C600. If damage or coating abrasion occurs and is deemed repairable, it shall be repaired at the Contractor's expense and to the satisfaction of the Engineer, in accordance with these Specifications. If damage is not repairable in the opinion of the Engineer, such pipe, fittings, valves or appurtenances will be rejected and shall be removed and replaced at the Contractor's expense.
    a. At all times during construction of the pipeline the Contractor shall take every precaution to prevent damage to the protective coating. Suitable approved tools and equipment shall be used for convenient and safe handling of coated ductile iron pipe and fittings. Metal chains, cables, tongs, forklifts or other equipment likely to cause damage to the coating will not be permitted. Web slings shall be a type that will not damage the coating. Slings should be a minimum of eighteen inches
    b. In preparation for transporting pipe, the use of web slings is necessary for tie downs. If cables or chains are used during transportation, they must be properly padded with approved, suitable material as required to protect the coating from damage while in transit.
    c. Use of a padded horizontal separator strip between successive rows of pipe is necessary to prevent damage to the pipe coating, i.e., rug material with outerwrap strips over it for all contact areas where pipe will rest.

d. No metal tools or heavy objects shall be permitted to come into contact unnecessarily with the finished coating.

e. Workmen shall not be permitted to walk on the coating, except when absolutely necessary and approved by the Engineer, in which case, they shall wear shoes with rubber or composition soles and heels or other suitable footwear which will not damage the coating.

3. Trench excavation and suitable bedding shall be complete to proper grade per Section 809 (Trenching and Backfilling) and Detail 830.03 before pipe is placed. Any adjustment due to improper trench grade or settlement shall be accomplished at Contractor expense. If the pipeline floats or collapses from accumulation of water in trench or from other causes, approved repair and replacement shall be at no cost to the City.

4. The pipeline trench excavation shall be dewatered sufficiently to allow pipe joints to be made under dry conditions. No joint shall be made under water.

5. No pipe shall be laid upon a foundation into which frost has penetrated, nor at any time when there is danger of ice formation or frost penetration at the bottom of the excavation. In freezing weather, open trench length shall be kept to a minimum and the excavation promptly backfilled after the pipe has been installed.

6. A firm, even bearing throughout the length of the pipe shall be provided by tamping select fill in the haunch area and at the side of the pipe to achieve the required bedding support angle. Bell holes shall be dug sufficiently large to insure that joints are properly made and the pipe is firmly bedded for the full length of the barrel.

7. When horizontal or vertical deflection of pipe from a straight line is necessary, the maximum permissible joint deflection shall not exceed the manufacturer's recommendations. Keep the pipe straight while pushing the pipe home. The joint deflection shall only be completed after the pipe is homed. Otherwise, change in alignment or grade shall be accomplished by use of pipe fittings which are the same diameter and strength as straight pipe.

8. Ductile Iron Pipe (DIP) and fittings shall be installed in accordance with the Details for buttresses and anchorages and the recommendations of the Ductile Iron Pipe Research Association.

9. Proper and suitable tools and appliances for safe and convenient handling and joining pipes and fittings shall be used. Slings shall not damage the exteriors and/or the pipe, and shall be wide canvas or rubber coated belts.

10. Pipe and fittings shall be carefully handled and lowered into the trench. Pipe shall be installed with special care to insure that each length abuts against the next to produce shoulder or unevenness of any kind along the inside bottom half of the pipeline. No wedging or blocking will be permitted in installing any pipe unless directed by written order or permission in writing is obtained from the Engineer. Under no condition shall pipe subjected to a blow or shock to bring it to required line and grade.

11. No pipe shall be brought into position until the preceding length has been bedded and secured in place. Care shall be used to secure watertightness and prevent damage to, or

disturbing of, the joints during the refilling process. After pipes have installed and joints have been made, there shall be no walking on or working over the pipe, except as may be necessary in tamping the backfill material, until the backfill is at least two feet (2') over the top of the pipe.

12. The pipes shall be thoroughly cleaned before being installed and shall be kept clean until acceptance of the completed Work. Open ends of all pipelines shall be provided with a stopper carefully fitted to keep dirt and other substances from entering. This stopper shall be kept in the end of the pipeline at all times when installation is not in progress. Surfaces of both pipe sections to be in contact with rubber gasket seal shall be thoroughly wire brushed to remove all loose rust and foreign matter, leaving clean smooth surfaces for jointing.
13. Straight pipe shall be furnished in standard uniform lengths. Approved short pipe lengths shall be used where needed to meet line and grade as closure pieces. Whenever a pipe requires cutting, to fit into the line or bring it to the required location, the Work shall be done in a manner that leaves a smooth, square end. Field cut pipe lengths shall be filed or ground to resemble the plain end of pipe as manufactured.
14. After completion of water main Work, unused pipe, and fittings and joint restraint pieces shall remain the property of the Contractor and be removed from the site. No additional compensation will be made.
15. Water mains shall have no less than forty-two inches (42") of cover measured from the existing and/or established grade to the top of the pipe whichever is lower, except as noted on the Plans. When crossing subsurface obstructions, twelve inch (12") minimum clearance shall be maintained between the pipe and the obstruction.
16. When crossing sanitary sewers, water pipe sections shall be centered over the sewer so that joints on both sides are the maximum distance from the sewer.
17. Prior to making gasketed joints, both mating pipe ends and the gasket shall be cleaned of all foreign material. The gasket shall then be inserted in or stretched over the cleaned gasket seat and lubricant applied to the gasket and the mating pipe end. The lubricant shall be approved for use in potable water and shall be harmless to the rubber gasket. Use only lubricant supplied by the pipe manufacturer. Pipe shall be laid with bell ends looking ahead in the direction of laying. As soon as the spigot ring is centered in the bell of the previously laid pipe, it shall be forced home with approved equipment.
18. Ductile iron pipe joints shall be assembled per AWWA C600 to insure joints that safely permit movement caused by expansion and contraction as well as slight ground settling or shifting.
19. Mechanical Joints
    a. Contact surfaces shall be cleaned and coated with an approved lubricant just prior to slipping gasket over plain end and into socket. A cast iron gland shall be positioned on the spigot end of the pipe, followed by a rubber gasket thoroughly lubricated with its tapered side facing the bell. The spigot shall then be inserted fully into the bell. The rubber gasket shall

then be moved into position by hand until it is flush with the face of the bell. The gland shall then be placed against the face of the rubber gasket and the bolts inserted and made finger tight. Bolts shall be drawn up evenly on alternate sides beginning at the top, keeping the gland parallel to the face of the bell at all times. All nuts shall be tightened uniformly with a torque in accordance with the manufacturer's recommendations.

b. A retainer gland shall not be used on any pipe joint or fitting connecting ductile iron pipe to existing cast-iron pipe.

c. Unless otherwise specified, diameter of ductile iron plain ends shall be the same as for mechanical joint cast or ductile iron pipe

d. After each ductile iron or steel pipe, fitting and valve is jointed complete, each joint area including restraint elements shall be cleaned, inspected and approved before next section is installed.

20. Restrained Joints

a. All twelve inch (12") and smaller diameter mechanical joint ductile iron water mains and fittings, including valves and fire hydrants, shall be installed using ductile iron retainer glands in place of standard follower glands.

b. Provide factory welded steel thrust collars or retainer glands embedded in in-line thrust blocks on ductile iron water mains where shown on Drawings.

c. Restraint of thrust forces in push-on joint ductile iron pipe shall be provided by an approved proprietary harnessing system installed in accordance with manufacturer's printed instructions. Work includes all excavation necessary to install harnessing.

d. Restraint of mechanical joint ductile iron pipe shall be accomplished by using approved ductile iron retainer glands in lieu of follower glands, installed in accordance with manufacturer's printed instructions.

e. Torque range for retainer gland set screws shall be in accordance with manufacturer's recommendations.

f. Where specifically indicated, undrilled steel thrust collars with concrete thrust blocks, drilled steel thrust collars with harnessing, steel tie rods strapped securely outside of the mechanical joint flanges, or use eye tie-bolt which allows tightening the joint before restraint is applied, shall be used to provide thrust force restraint. Collars, rods and other steel harness items shall be per manufacturer's recommendations and approved in advance by the Engineer.

g. After each ductile iron restrained joint is complete, the joint restraint elements shall be cleaned and inspected.

21. Maintaining Water Service

    a. Connections to existing work shall be made by the Contractor in the presence of the Engineer at such a time and in such manner as directed and approved by the Engineer. The Contractor shall submit to the Engineer, for review and approval, a schedule for any proposed system disruption along with a draft letter of notice to the effected customers. Upon approval by the Engineer, the Contractor shall notify, in writing, the customers in the area to be effected by the shut-off. The Contractor shall notify the Engineer for approval at least forty-eight (48) hours prior to cutting or abandoning a water main. All valves necessary for making connections will be operated by the City's representative or the City valve crews. The Contractor shall complete the connections with the greatest possible speed so that the public will be inconvenienced as little as possible. Existing water service shall be maintained at all times except when disconnecting or connecting new Work. Existing water mains paralleling new water mains shall be kept in service until new water mains are complete, temporarily capped as needed, tested, chlorinated and charged. When specified in the "Special Provisions," the Contractor shall make connections at night. Unless otherwise indicated, the Contractor shall cut existing water mains, remove pipe, fittings, and appurtenances to make required connections; connect new water mains; reconnect existing water mains; and perform all Work necessary or incidental thereto.

    b. When a tapping sleeve and valve is to be used for making the connection, the Contractor shall not proceed with the installation until directed to do so by the Engineer. The tapping sleeve and valve shall be prepared in accordance with 33 12 16 (Water Valve and Appurtenances). Where it is necessary to remove an existing buttress to make a connection, the removal shall be done by the Contractor without additional compensation therefore.

22. Abandonment

    a. Install cap on end of pipe to be abandoned. Place required concrete blocking to retain the cap on the water main to remain in service.

    b. Where mains are to be abandoned and removed to a fitting or valve cut and plug main at fitting or valve. When shown on the Contract Plans, remove and salvage abandoned valves, valve boxes, and fire hydrants within the limits of abandonment and deliver to City warehouse. Pipe, fittings and other appurtenances that are removed but not required to be salvaged, shall become the property of the Contractor and shall be removed and disposed of offsite.

c. For abandonment of water mains twenty inches (20") and larger diameter, construct a brick bulkhead nine inches (9") thick or install an approved plug or cap at each location where the pipe was cut or valve removed.

d. For abandonment of water mains smaller than twenty inch (20") diameter, install bulkheads using brick masonry, twenty-five hundred (2500) psi concrete, gray iron plugs or caps at the end of abandoned sections.

23. Fire Hydrant Installation

a. Shall be in compliance with AWWA Manuel M17

b. Fire hydrants shall be installed and restrained in accordance with the Baltimore City Details, at the locations shown, and to elevations directed by the Engineer. Hydrants shall be set within a gravel or crushed stone drainage well extending the full width of the trench.

c. Hydrant leads shall be laid level on a firm foundation to insure that the hydrant is set plumb. Backfill around the hydrant shall be compacted so as to obtain a density of at least 95% of maximum when measured in accordance with MSHTO T180, Method D.

d. Where hydrants are to be relocated, the Contractor shall remove the existing tee, tapping sleeve, valve and fire hydrant and sleeve up the main water line.

e. A gravel well one foot (1') square by two feet (2') deep shall be constructed adjacent to the fire hydrant connection trench. Gravel should be placed at least one foot (1') above connection at shoe and lower barrel, as shown on the Details.

f. Install traffic hydrants with a concrete collar, about six inches (6") thick two feet (2') by two feet (2') around the lower fire hydrant barrel at or near the ground line. Expansion material should be placed between the fire hydrant barrel and the concrete collar.

24. Chlorination and Field Tests

a. The Contractor shall furnish all labor, tools, materials, and equipment necessary to perform the tests specified and to chlorinate the water mains. The cost of testing and chlorination including all materials, labor and equipment shall be included in the unit prices Bid for the waterline.

b. All equipment used in testing shall be provided by the Contractor, and subject to the approval of the Engineer, and shall be such as to properly develop, maintain and measure hydrostatic test pressures and leakage rates. Where devices such as meters, recorders, charts, plugs, caps, blind flanges, corporation stops or bulkheads are required to develop, maintain and measure test pressures, these devices shall be furnished and installed by the Contractor.

c. All defects revealed by the tests shall be corrected without cost to the City. Tests and repairs shall be continued until test requirements are met. Repairs to the various systems shall be made with new materials. When it is necessary to replace pieces of pipe, the replacement shall be the same material and thickness as the defective piece. Tests shall be repeated after defects disclosed thereby have been made good.

d. The section of water main shall be filled by a metered connection from such existing fire hydrant or main as may be designated by the Engineer. When charging and testing water mains which are not sufficiently close to existing water mains carrying City water to permit connection direct by pipe or hose approved tank wagons shall be used to haul water and serve as suction tanks.

25. Chlorination, Flushing, and Bacteriological Testing

a. When the water mains are completed, each section shall be accordance with AWWA C601 except as noted below. A solution of hypochlorite of lime or chlorine gas shall be discharged into the water main, by continuous feed, near the point where the water main is being charged. This solution shall be of such strength and quantity as may be necessary to provide ten (10) parts per million, by weight of residual chlorine after twenty-four (24) hours, in the section of water main being charged. If the required residual is not obtained, the Contractor shall repeat the chlorination until it obtains this residual.

b. After the twenty-four (24) hour (minimum) disinfection period, the Contractor shall flush the water main until the chlorine level is at or below one (1) ppm.

c. The Engineer shall determine the amount of main to be chlorinated and tested at any one time and reserves the right to separate the installation into several sections in the event of long extensions, or installations of pipe designed for different head conditions or for other reasons.

d. The Engineer will collect water samples in accordance with AWWA C652 and provide for their analysis for bacteriological quality. If the results meet the requirements of the City's Water Quality Lab, and they release the main for active service, then, the water main can then be tied into the distribution system. Should the chlorine residual and bacteriological analysis not be satisfactory, the Contractor shall flush and rechlorinate the water main until satisfactory results are obtained Samples shall be taken for every street, court or section.

e. It shall be the responsibility of the Contractor to purge the line of the chlorinated water after it has been tested. No detectable chlorine can be released a stream. Upon successful testing and disinfection of the new water mains, Contractor shall dispose of the chlorinated water using either

of the following methods. The Contractor must submit a proposed plan for method of chlorinated disinfection water to the Engineer for approval prior to proceeding.

1) Discharge directly into an available public sanitary sewer. The point must be approved by the Engineer prior to implementation. The discharge rate must be controlled to avoid overloading of the sanitary sewer. This is the preferred method.
2) Pump the water main and haul the chlorinated water to a safe discharge location (sanitary sewer).

26. Hydrostatic/Leakage Testing

a. Hydrostatic Testing: Water mains and appurtenances shall be hydrostatically tested by the Contractor in accordance with AWWA C600 and as specified herein. All piping shall be adequately braced and supported during the tests so that no movement, displacement or damage will result from the application of the test pressure. Relief devices in the various systems shall be capped or plugged during the tests. The Contractor shall cap and buttress the new water main between the sections of the existing pipe. Where concrete pipe is installed, the Contractor shall furnish, at his own cost and expense, all necessary bulkheads, caps, plugs or other fittings required to stop off, temporarily, the main by means of sleeves and spacers or other approved methods. Piping systems shall not be tested against any valves. When hydrants are in the test section, the test shall be made against the operating valve in the hydrant. All hydrant branch valves shall be in the open position during this test phase.

b. Ductile iron pipe (DIP), PVC, steel pipe (with gasketed joints) and prestressed concrete pressure pipe (PCCP) shall be hydrostatically tested by slowly filling the main with chlorinated water. The pressure shall be raised to a value as specified on the Contract Drawings. The test pressure shown on the Contract Drawings shall be applied at the low point of the main shall be maintained for at least thirty (30) minutes. Test pressure shall not vary by more than plus or minus five (± 5) psi for the duration of the test. Before applying the specified test pressure, air shall be expelled completely from the section of piping under test. If permanent air vents are not located at all high points, air shall be bled thru a temporary outlet. In ductile iron pipe, corporation cocks shall be installed at such points so that the air can be expelled as the line is filled with water. After all the air has been expelled, the corporation cocks shall be closed and the test pressure applied. At the conclusion of the pressure test, the corporation cocks shall be removed and plugged or left in place as required by the Specifications.

27. Where necessary to relocate existing water supply services the work shall consist of, but is not limited to, the relocation of the existing meter(s) and vault and the installation of new

service pipe of the size as indicated on the Plans from a new corporation at the existing water main, to the relocated new meter and vault and to the consumer's service pipe. All new corporations required by Contract Documents shall be furnished and installed by the Contractor. The existing corporation shall be plugged at the existing water main and the existing service pipe removed from it.

28. Where the Contractor encounters an existing water supply service pipe using galvanized pipe it shall relocate the existing service pipe, meter and vault as described in the preceding paragraph, using new copper tubing.

29. Where the Contractor encounters an existing water supply service pipe using copper pipe, it need only relocate the existing meter and vault to the new proposed curb line and grade of the street involved, making use of the existing copper tubing and using new copper tubing where necessary to make connections to the consumer's service pipe.

30. Sewer house services to be relocated should use PVC or ductile iron pipe to replace pipe sections as necessary following Details. PVC pipe shall be handled with care to avoid severe impact blows, abrasion damage, gouging and cutting by metal surfaces or rocks, and never handled with individual chain or single cable, even if padded. Exposure to sources of heat or hot objects such as heaters, boilers, steam lines, and engine exhaust shall be avoided. Gaskets shall be protected from excessive exposure to heat, direct sunlight, ozone, oil and grease. Handling techniques in cold weather require more care than during hot weather. Each pipe unit will be inspected for straightness and damage before being installed in the Work. Defective pipe and fittings shall be removed and replaced with approved materials at no additional cost to the City. Assembly of the gasket joint shall be performed as recommended by pipe manufacturer. All joint surfaces shall be cleaned immediately before joining; the bell and beveled spigot shall be lubricated with an approved lubricant, and then carefully pushed into place. A suitable device shall be used to force the pipe units together. Good alignment of the pipe is essential for ease of assembly. Align the spigot to the bell and insert the spigot into the bell until it contacts the gasket uniformly; do not swing spigot into bell. Generally, the spigot end of the pipe is marked by the manufacturer to indicate the proper depth of insertion. If undue resistance to insertion of the end is encountered or the reference mark does not position properly, disassemble the joint and check the position of the gasket. If it is twisted or pushed out of its seat, inspect components, repair or replace damaged items, clean components, and repeat the assembly steps. If gasket was not out of position, verify proper location of the reference mark. Relocate the reference mark if it is out of position. To join field cut pipe, the pipe end shall be prepared first; a square cut is required for proper assembly. The pipe can be cut with a hacksaw, handsaw, or a power handsaw with a steel blade or abrasive disc. The pipe shall be marked around its entire circumference prior to cutting to insure a square cut. Use a factory finished beveled end as a guide for proper bevel angle, depth of bevel, plus the distance to the insertion reference mark. The end shall be beveled using a pipe beveling tool or a wood rasp to the correct taper. A portable sander or abrasive disc also may be used to bevel the pipe end. Round off any sharp edges on the leading edge of

the bevel with a pocketknife or a file, and then assemble as stated above. Only PVC adapters shall be used to connect to the various other types of pipe. In addition, only PVC caps or plugs shall be used to bulkhead the ends. Material shall not be dropped directly on the pipe. After first course is placed to pipe grade, attention shall be given to carefully placing pipe and excavating for socket joints. Bedding gravel shall then be placed around pipe haunch in second course to provide correct alignment. Then, third course and finally fourth course shall be placed and consolidated to avoid pipe deflection. Compaction equipment shall not be used directly over pipe until sufficient backfill has been placed to insure that such equipment will not damage or disturb pipes, usually a minimum of thirty inch (30") depth.

MEASUREMENT AND PAYMENT. "Water Main 8" Ductile Iron Pipe" and "Water Main 10" Ductile Iron Pipe" will be measured and paid for at the Contract Unit prices per linear foot installed and tested. The "22.5 degree fitting Ductile Iron pipe" will be measured and paid for at the Contract Unit price per each for the number of items installed and tested. The payment will be full compensation for all material, labor, equipment, tools and incidentals necessary to complete the work.

"Contingent Water Service Relocation, Less than Two Inches (2")" and "Contingent Water Service Relocation, Greater than Two Inches (2")" will be measured and paid for per linear foot of pipe service installed complete including excavation, allowance of two linear feet for piping in the meter box (meter yoke, shunt, couplings and riser pipe when needed), backfill and compaction including backfill for meter pits, replacing service piping, tap and install new corporation stop, close the existing corporation stop and sever the connection, connections at corporation stop, at water meter, and at connection and reducer as needed to connect to existing service pipe at the full or partial replacement limit, all labor, materials, tools, equipment and incidentals needed to complete the work. Payment will be based on pipe in place, whether the pipe is installed by open cut or by approved trenchless techniques. No measurement or payment will be made for the Work necessary to furnish and install water meter boxes and reinstall frames and covers. All costs associated with furnishing and placing meter pit foundation gravel, furnishing and installing water meter boxes, reinstalling frames and covers, coordination with the city for the reinstallation of meters, and all labor, materials, tools, equipment and incidentals needed to complete Work specified is considered incidental to the Contract and shall be included in the unit price for water service connections as contained in the proposal.

"Contingent Sanitary Sewer Service Relocation" will be measured and paid for per linear foot of pipe service installed complete, including excavation, backfill and compaction. Payment will be based on pipe in place. All labor, materials, tools, equipment and incidentals needed to complete Work specified is considered incidental to the Contract and shall be included in the unit price for sanitary sewer service connections as contained in the proposal.

CATEGORY 800
TRAFFIC

CONTINGENT ELECTRICAL MANHOLE TOP SLAB RECONSTRUCTION

DESCRIPTION. Contingent Electrical Manhole Top Slab Reconstruction shall consist of furnishing all materials, equipment and labor necessary to replace deteriorated existing electrical manhole top slabs as specified on the Plans and in accordance with these Special Provisions and as may be directed by the Engineer. Locations and extent of the work will be field determined by the Engineer.

MATERIALS. The materials specified for the reconstruction of the electrical manhole top slabs shall meet the following requirements:

Cast in Place Portland Cement Concrete	902.10 Mix No. 6
Epoxy Coated Reinforcement Steel	908.01 and 917.02

Frames and covers will be as specified elsewhere in the Baltimore City Details and Section 909.04.

CONSTRUCTION. Mix, place and test the top slab concrete in accordance with Section 420.

Submittals. The following submittals shall be made to the Engineer for review and acceptance prior to the start of work:

1. Shop drawings detailing the new electrical manhole top slab dimensions including plan size and thickness, layout of reinforcement, location of frame and cover and proposed method of forming the top slab.

2. Computations verifying the design of the top slab to support a vehicle corresponding to the HL-93 live load vehicle (with impact). The design shall be in accordance with the latest edition of the AASHTO Load and Resistance Factor Design Specifications. Design computations shall be prepared by and stamped by a Professional Engineer registered in the State of Maryland who has demonstrated experience preparing engineering calculations for highway project work.

MEASUREMENT AND PAYMENT. The item Contingent Electrical Manhole Top Slab Reconstruction will be measured and paid for at the Contract unit price per cubic yard based on the volume of concrete placed to replace deteriorated existing electrical manhole top slabs as specified. The payment for Contingent Electrical Manhole Top Slab Reconstruction will be full compensation for all material, labor, equipment, tools, and incidentals necessary to complete the work including, but not limited to, the removal and proper disposal of deteriorated existing electrical manhole top slabs (with frames and covers) as specified, forms, concrete and epoxy coated reinforcement steel.

The installation of new frames and covers is incidental to this item. Furnishing frames and covers will be paid for by other pertinent items in the Contract. The work associated with the field inspection to verify dimensions and prepare the required shop drawings and design calculation submittals will be incidental to the item Contingent Electrical Manhole Top Slab Reconstruction.

CATEGORY 900
MATERIALS

655 **ADD:** The following after the last paragraph of 900.02 TECHNICIAN QUALIFICATION REQUIREMENTS.

900.03 RECYCLED MATERIALS.

900.03.01 CERTIFICATION. All recycled or rehandled material furnished or supplied for use may require testing and certification to ensure compliance with all State and local applicable environmental and EPA regulations. The required testing may include, but not be limited to, the EPA Toxicity Characteristic Leaching Procedure (TCLP) or its successor. Provide testing and certification for all recycled materials at no additional cost to the Administration. Evaluation and interpretation of the test data will be made by an OMT Quality Assurance Manager. The above requirements do not preclude the normal materials acceptance process, and the recycled material shall meet all applicable specifications. EPA regulations governing the use of the material, certified test results, and material safety data sheets shall accompany the source of supply letter and sample submitted for approval.

Refer to the Contract Documents for recycled materials not covered by this specification.

900.03.02 RECLAIMED/RECYCLED CONCRETE (RC).

Usage. Use RC for the following with written approval:

(a) Graded Aggregate Base (GAB).

(b) Common, Select, or Modified Borrow:

(1) At least 2 ft above saturated soil or groundwater conditions,

(2) At least 100 ft from surface waters (streams, creeks, or rivers),

(3) At least 3 ft from exposed metal surfaces, and,

(4) At least 3 ft from geotextile.

(c) Riprap.

Do not use RC as Capping Borrow nor as aggregate for the following:

(a) Portland cement concrete.

(b) Hot mix asphalt.

(c) Drainage systems.

(d) Mechanically stabilized earth (MSE) systems:

(1) MSE walls.

(2) Reinforced soil slopes (RSS).

(3) Reinforced earth slopes (RES).

(e) In embankment construction as follows:

(1) Within 1 ft of the top surface of any area to be vegetated.

(2) Within 2 ft of saturated soil or groundwater conditions.

(3) Within 100 ft of any surface water course (streams, creeks, or rivers).

(4) Within 3 ft of any metal pipe or shoring.

(f) Under pervious or porous surfaces.

Grading Requirements. The grading requirements for the use of RC are:

(a) Table 901 A when used as GAB or for any other application within the pavement structure.

(b) 204.02 when used in embankment construction.

(c) 916.01 when used as Borrow material.

(d) 901.02.01 when used as riprap.

RC shall not contain more then 5 percent brick and hot mixed asphalt material by mass except when used as Common Borrow.

pH Requirements. The pH shall be less than 12.0 for all applications. RC usage shall not cause water leaving the site to exceed a pH of 8.5. RC may be blended with natural materials to control the pH. RC used as GAB requires daily testing to monitor the pH, and as directed.

Quality Control. The producer shall submit a Quality Control Plan and obtain approval prior to production. The plan shall include, but not be limited to, the operational techniques and procedures proposed to produce the RC product. Quality control includes the sampling and testing performed to validate the quality of the product during production operations.

Quality Assurance. OMT Quality Assurance personnel will perform quality assurance inspection, sampling, and testing at the point of processing/reclamation. Additional inspection and compaction control will be performed by the Project Engineer.

900.03.03 RECYCLED ASPHALT PAVEMENT (RAP).

Usage. Use RAP for Common, Select, Capping, or Modified Borrow.

Do not use RAP as aggregate for the following:

(a) Graded Aggregate Base (GAB).

(b) Portland cement concrete.

(c) Drainage systems.

(d) Embankment construction.

(1) Within 1 ft of the top surface of any area to be vegetated.

Refer to MSMT 412 and M 323 for the use of RAP in hot mix asphalt mixes.

Grading Requirements. The grading requirements for the use of RAP are:

(a) 204.02 when used in embankment construction,

(b) 916.01 when used as Borrow material,

(c) 901.02.01 when used as riprap.

Quality Control. Create a captive stockpile for storing the RAP prior to use. Create a new captive stockpile and take new acceptance samples for gradation approval whenever the source of the RAP changes.

Quality Assurance. OMT Quality Assurance personnel will sample and test the RAP stockpiles to ensure that they meet the above gradation requirements. The completed test results will be reviewed by the OMT Soils and Aggregate Division for approval.

Construction of Control Test Strip. The location, equipment, and methods used to construct the control test strip shall be as directed; prior to approval. The equipment and methods used to construct the control test strip shall be the same as those used in subsequent construction. Place and test the control test strip when the RAP is 32°F or higher to establish the maximum density. RAP is temperature sensitive, which may affect the density.

Construct the control test strip that shall be at least 100 ft long, 12 ft wide and a maximum compacted lift thickness of 6 in. Prepare the subgrade for the control test strip in accordance with 204.03.07. Do not construct the control strip, or perform any subsequent construction, on frozen subgrade.

Compact the RAP for the control test strip with one pass of the roller. Measure the density after one pass with a nuclear density gauge (backscatter method) at the frequency for capping material at five random locations distributed across the length and width of the control test strip, as directed. Record the measurements and mark the locations for future reference.

Compact the RAP for the control test strip with a second pass of the roller. Measure and record the density again at the exact locations previously tested and as described above. Prepare a plot of density versus the number of roller passes. Continue this process until the maximum dry density of the control strip is established.

There should be no drop in average density during construction of the control test strip for each lift. A drop in the average density of greater than 2 pcf during construction of the control test strip is an indication that the material is not properly compacting, and a new test strip shall be constructed.

The Project Engineer may require the Contractor to cut into the control test strip for visual inspection. All material, labor, equipment, tools, and incidentals necessary to provide an approved control test strip shall be at no additional cost to the Administration.

Compaction Control. Use the roller pattern and number of passes determined from the construction of the test strip to compact the RAP for production placement. The density of the RAP compacted for production work shall be at least 97 percent of the maximum density obtained from the control test strip. Recheck the density of the production work if it is less than 97 percent of the maximum density obtained from the control test strip. Construct a new control test strip if the second density does not meet the 97 percent requirement. Construct a new control test strip if the measured density of the compacted RAP for production work exceeds 105 percent.

Establish one rolling pattern to achieve maximum density for each use based on the control test strips. Samples or results produced prior to the construction of any new stockpiles will not be considered.

CATEGORY 900
MATERIALS

665 **DELETE:** SECTION 902 — PORTLAND CEMENT CONCRETE AND RELATED PRODUCTS in its entirety.

INSERT: The following.

SECTION 902 — PORTLAND CEMENT CONCRETE AND RELATED PRODUCTS

902.01 STORAGE. Storage of materials shall conform to the Contract Documents and as directed by the Engineer.

902.02 CERTIFICATION OF PORTLAND CEMENT AND BLENDED HYDRAULIC CEMENT. The manufacturer shall furnish certification as specified in TC-1.03. The certification shall also include:

(a) The mill shall report its quality control procedures, and submit a new report whenever there is a procedural change.

(b) The mill's control laboratory shall be inspected by the Cement and Concrete Reference Laboratory of the National Institute of Standards and Technology on their regularly scheduled visits. The Engineer shall be provided with copies of the reports of these inspections along with an account of the action taken to correct cited deficiencies.

(c) Records of data accumulated by the quality control procedures shall be produced upon request.

(d) A certified document shall accompany each shipment stating that the contents conform to all applicable requirements. Additionally, the document shall show the producer's name, mill location, carrier number, date loaded, weight contained in carrier, silo number, consignee, destination, Contract number, and type of cement. The signature and title of the signer shall be shown on the document.

(e) The mill shall, upon request, supply certified chemical and physical test values that can be associated with any sample representing cement drawn from a particular silo on a given date.

(f) Acceptance of cement by certification will be terminated if test results differ from mill results by more than the precision limits given in the test method. The acceptance procedure will then revert to storage testing and approval prior to shipment.

902.03 HYDRAULIC CEMENT.

902.03.01 Portland Cement. M 85, with the fineness and the time of setting determined using T 153 and T 131, respectively.

902.03.02 Ground Iron Blast Furnace Slag. M 302, Grade 100 or 120. The Contractor may request to substitute a maximum of 50 percent of the weight of cement with ground iron blast furnace slag. When ground iron blast furnace slag is used, the minimum cement factor and water/cement ratio will be determined on the basis of the combined weight of the portland cement and ground iron blast furnace slag. When ground iron blast furnace slag is used to control alkali silica reactivity, see Table 902 B for percentage.

902.04 BLENDED HYDRAULIC CEMENT. M 240, Type I (PM) or a Type IP containing 15 to 25 percent pozzolan by weight of cement. Maximum loss on ignition is 3.0 percent. Do not use ground iron blast furnace slag for blending. The requirement for a manufacturer's written statement of the chemical composition is waived.

902.05 MASONRY CEMENT. C 91, except the water retention and staining tests are waived.

902.06 CONCRETE ADMIXTURES. Do not use concrete admixtures that contribute more than 200 ppm of chlorides based on the cement content when tested per MSMT 610. Use only prequalified admixtures.

Do not use pozzolan and Type I (PM) or Type IP cement in the same mix. Since the strength gains are delayed with these materials, a longer period of time may be required for curing and form removal.

902.06.01 Air Entraining Admixtures. M 154.

902.06.02 Chemical Admixtures. M 194, Type A, D, or nonchloride C.

902.06.03 High Range Water Reducing Admixtures. M 194, except that it shall be a liquid, the water content shall be a maximum of 85 percent of that of the control, and the durability factor shall be a minimum of 90. Use Type F for early strength, which shall produce a minimum compressive strength in 12 hours of 180 percent of that of the control. Use Type G when early strength is not specified. The manufacturer shall furnish certification as specified in TC-1.03. The certification shall include curves indicating the fluid ounces of admixture per 100 lb of cement as related to water reduction and strength gain for 12 hours when used with a minimum cement factor of 700 lb.

902.06.04 Pozzolans. The use of pozzolans may be requested to control alkali silica reactivity or for other reasons. When a pozzolan is used, determine the minimum cement factor and water/cement ratio on the basis of the combined weight cement and pozzolan. See Table 902 B for percentage of fly ash, and microsilica.

(a) Fly Ash. M 295, pozzolan Class C or F, except that the maximum permissible moisture content shall be 1.0 percent, and when used in concrete Mix Nos. 3 and 6 the maximum loss on ignition 3.0 percent.

(b) Microsilica. C 1240, except that the oversize requirement is waived.

902.06.05 Corrosion Inhibitors. Corrosion inhibitors shall be calcium nitrite based and contain a minimum of 30 percent active ingredients by mass. The gallonage of corrosion inhibitor used in the concrete mixture shall be included as water when determining the water/cementitious materials ratio.

902.07 PORTLAND CEMENT CONCRETE CURING MATERIALS. Use burlap cloth, sheet materials, liquid membrane forming compounds, or cotton mats.

902.07.01 Burlap. M 182, Class 1, 2, or 3.

902.07.02 Sheet Materials. M 171 with the following exceptions:

(a) White Opaque Burlap Polyethylene Sheeting. Tensile strength and elongation requirements are waived. Use sheeting having a finished product weight of not less than 10 oz/yd^2.

(b) White Opaque Polyethylene Backed Nonwoven Fabric. 902.07.02(a), with the thickness requirement waived. Use material having a finished product weight of not less than 5 oz/yd^2.

(c) White Opaque Polyethylene Film. Tensile strength and elongation requirements are waived.

902.07.03 Liquid Membrane. M 148. Field control testing of the white pigmented curing compounds is on the basis of weight per gallon. The samples shall not deviate more than ± 0.3 lb/gal from the original source sample.

902.07.04 Cotton Mats. Cotton mats consist of a filling material of cotton bats or bats covered with unsized cloth and tufted or stitched to maintain the shape and stability of the unit under job conditions of handling.

Use coverings of either cotton cloth, burlap or jute having the following properties:

(a) Cotton cloth covering shall weigh not less than 6.0 oz/yd^2 and have an average of not less than 32 threads/in. of warp and not less than 28 threads/in. of filling. Use raw cotton, cotton comber waste, cotton card strip waste, or combinations thereof as the raw material used in the manufacture of the cotton cloth.

(b) Burlap or jute covering for cotton mats shall weigh not less than 6.4 oz/yd^2 and shall have not less than of 8 threads/in. of warp and not less than 8 threads/in. of filling. Use the grade known commercially as "firsts" and they shall be free from avoidable imperfections in manufacture and from defects or blemishes affecting the serviceability.

Use a cotton bat, or bats made of raw cotton, cotton waste, cotton linters, or combinations thereof, as the filling material for the mats. Mats shall weigh not less than 12 oz/yd^2.

902.08 FORM RELEASE COMPOUNDS. Use form release compounds that effectively prevent the bond of the concrete to the forms. Form release compounds shall not cause discoloration of the concrete or adversely affect the quality or rate of hardening at the interface of the forms.

The flash point of the form release compound shall not be less than 100 F when tested per T 73.

902.09 PARAFFIN WAX. Use clear paraffin wax for use as a bond breaker for concrete. The flash point shall not be less than 380 F when tested under D 92.

902.10 PORTLAND CEMENT CONCRETE. Section 915 and as specified herein.

902.10.01 Proportioning. Prior to the start of construction, submit to the AME the source and proportions of materials to be used for each concrete mix. The mixture shall meet 902.10.03.

The concrete, with the exception of water and chemical admixtures, shall be proportioned by weight. Water and chemical admixtures may be proportioned by volume or weight. The mix shall be uniform and workable.

902.10.02 Materials.

Coarse Aggregate	901.01
Fine Aggregate	901.01
Cement	902.03 and 902.04
Concrete Admixtures	902.06
Synthetic Fibers	902.15
Water	921.01

902.10.03 Portland Cement Concrete Mixtures.

The concrete mixes shall conform to the following:

TABLE 902 A

PORTLAND CEMENT CONCRETE MIXTURES									
MIX NO.	28 DAY SPECIFIED COMPRESSIVE STRENGTH psi	STANDARD DEVIATION psi	CRITICAL VALUE psi	MIN CEMENT FACTOR lb/yd^3	COARSE AGGREGATE SIZE M 43 / M 195	MAX WATER/ CEMENT RATIO by wt	SLUMP RANGE in.	TOTAL AIR CONTENT %	CONCRETE TEMPERATURE F
1	2500	375	2430	455	57, 67	0.55	2 – 5	5 – 8	70 ± 20
2	3000	450	3010	530	57, 67	0.50	2 – 5	5 – 8	70 ± 20
3	3500	525	3600	580	57, 67	0.50	2 – 5	5 – 8	70 ± 20
4	3500	525	3600	615	57, 67	0.55	4 – 8	N/A	70 ± 20
5	3500	525	3600	580	7	0.50	2 – 5	5 – 8	70 ± 20
6	4500	675	4770	615	57, 67	0.45	2 – 5	5 – 8	65 ± 15
7	4200	630	4420	580	57	0.50	1½ – 3	5 – 8	70 ± 20
8	4000	600	4180	750	7	0.42	2 – 5	5 – 8	65 ± 15
9	3000 (a)	N/A	N/A	800	57, 67	0.45	4 – 8	5 – 8	70 ± 20
10	4500	675	4770	700	¾" – No. 4	0.45	2 – 5	6 – 9	65 ± 15
11	4200	630	4420	—	57, 67	0.45	2 – 5	5 – 8	65 ± 15
12	4200	630	4420	—	¾" – No. 4	0.45	2 – 5	6 – 9	65 ± 15

Note 1: When concrete is exposed to water exceeding 15,000 ppm sodium chloride content, Type II cement shall be used. In lieu ofType II cement, a Type I cement may be used in combined form with an amount of up to 50 percent replacement with ground iron blast furnace slag, or an amount of up to 25 percent replacement with Class F fly ash. The Contractor shall submit to the Engineer the proposed mix proportions and satisfactory test results per C 1012 showing a sulfate resistance expansion not exceeding 0.10 percent at 180 days

Note 2: The temperature of Mix No. 6 when used for other than superstructure work as defined in TC-1.03 shall be 70 ± 20 F.

Note 3: Type A or D admixture shall be added to bridge, box culvert, and retaining wall concrete.

Note 4: Nonchloride Type C admixtures may be used when approved by the Engineer.

Note 5: Other Slump Requirements:
When a high range water reducing admixture Type F or Type G is specified, the slump shall be 4 to 8 in.
When synthetic fibers are specified, the slump shall be 5 in. maximum.
When concrete is to be placed by the slip form method, the slump shall be 2-1/2 in. maximum.
When the absorption of the coarse aggregate is greater than 10 percent, the slump shall be 3 in. maximum.

Note 6: Mix 9 shall contain a Type F high range water reducing admixture.

Note 7: Mix 10 and 12 shall be proportioned as specified in 211.2 of the ACI's Recommended Practices for Selection Proportions for. Structural Lightweight Concrete. The maximum average Density of Cured Concrete shall be 118 lb/ft^3. Control testing for Density of Cured Concrete shall be two companion cylinders for each 100 yd^3, or fraction thereof, as specified in M 195.

Note 8: Mix 11 and 12 shall also conform to all requirements as specified in Table 902 C.

(a) Acceptance will be based on a minimum compressive strength of 3000 psi in 24 hours. Design approval will be given based on trial batch obtaining a minimum compressive strength of 2500 psi in 12 hours. Testing shall conform to 902.10.08 except that cylinders shall remain in the molds until tests are conducted.

Coarse and fine aggregate having an expansion up to 0.10 percent when tested for alkali silica reactivity (ASR) MSMT 212 may be used without restriction. Aggregates having an expansion greater than 0.10 but less than 0.35 percent are considered reactive and may only be used when one of the options in table 902 B are employed. Those having an expansion of 0.35 percent and greater are prohibited.

TABLE 902 B

OPTION	ALKALI CONTENT OF CEMENT % max	REPLACE CEMENT WITH		SPECIFICATION
		MATERIAL	% BY WEIGHT	
1	1.50	Class F Fly Ash	15 – 25	M 295
2	1.50	Ground Iron Blast Furnace Slag	25 – 50	M 302 Grade 100 or 120
3	1.50	Microsilica	5 – 7	C 1240
4	—	Blended Cement (a)	100	M 240
5	0.60 (b)	Low Alkali Cement	100	M 85

(a) Pozzolan content of 15 – 25 percent by weight of cement
(b) For mix 9 used for Portland cement concrete pavement repairs; the maximum allowable percentage of alkalies in Portland cement shall be 0.70.

When reactive aggregate is used, designate which option will be used to control the formation of the ASR gel. If an option other than option 5 in Table 902 B above is chosen, conduct tests per MSMT 212 using the reactive aggregate and the proposed cementitious material. The expansion test results shall not be greater than 0.10 percent. When more than one reactive aggregate is used in a concrete mix, each shall be tested individually and the maximum amount of pozzolan required to reduce the expansion of all the aggregates to 0.10 percent or less shall be used. Submit the aggregate source, test results, and the percent and type of replacement cement to the Engineer. The Engineer may withhold source approval pending verification testing.

TABLE 902 C

MIX PHYSICAL PROPERTIES		
TEST PROPERTY	**TEST METHOD**	**SPECIFICATION LIMITS**
Minimum Cementitious Materials Factor, lb/yd^3	—	580
Maximum Content of Portland Cement, lb/yd^3	—	550
Water/Cementitious Materials Ratio by Wt.	—	0.45
Corrosion Inhibitor, gal/yd^3	902.06.05	2.0
Synthetic Fibers, lb/yd^3	902.15	1.5
Permeability of Field Concrete, moving average of three tests, coulombs max	T 277 Modified	2500
Permeability of Field Concrete, individual test, coulombs max	T 277 Modified	3000
Shrinkage at 28 days, microstrains	C 157	400

Note 1: Only Type I or II Portland cement shall be used.

Note 2: Mixes shall contain ground iron blast furnace slag, fly ash or microsilica.

Note 3: The water to cement ratio shall be based upon the total water to cementitious materials ratio. The gallonage of the corrosion inhibitor shall be included in the water/cementitious materials ratio.

Note 4: The permeability test value of field concrete shall be the average of two test specimens representing production concrete. Test specimens shall be molded on the project site in 4 x 8 in. molds conforming to M 205. Test specimens shall be handled under same conditions as compressive strength test specimens in conformance with C 31 for the first seven days. When seven days old, they shall be cured in a 100 F water bath for the remainder of the 28 day curing. The 28 day rapid chloride permeability of the specimens will be determined in conformance with T 277. Test for the geometry of test specimens will be waived.

Note 5: Shrinkage tests will be performed on trial mixes only.

Note 6: High range water reducing admixture may be used except the water reducing requirements will be waived.

Note 7: A sealer conforming to 902.12 shall be used on the finished surface.

902.10.04 Trial Batch. A trial batch shall be prepared to certify that each mix meets 902.10.05 and 902.10.06. Approval will be given when the test results meets the minimum required average strength.

Make arrangements with the AME at least two weeks in advance, to have an authorized representative present during the batching and testing. Each trial batch shall consist of at least 3 yd^3 of concrete. Supply all equipment, and labor required to produce the trial batches and conduct the required tests at no additional cost to the Administration.

The AME may waive the requirement for a trial batch when past performance records show that the required average strength requirement has been met.

902.10.05 Design Required Average Strength.

Specified compressive strength, f_c', psi	Required average compressive strength, f_{cr}', psi
$f_c' \leq 5000$	Use the larger value computed from Eq. (A-1) and (A-2) $f_{cr}' = f_c' + 1.34s$ (A-1) $f_{cr}' = f_c' + 2.33s - 500$ (A-2)
Over 5000	Use the larger value computed from Eq. (A-1) and (A-3) $f_{cr}' = f_c' + 1.34s$ (A-1) $f_{cr}' = 0.90 f_c' + 2.33s$ (A-3)

where:

f_c' = the 28 day specified compressive strength.
s = the standard deviation as specified in 902.10.06.

A test is defined as the average strength of two companion cylinders.

902.10.06 Standard Deviation.

(a) When past performance records are available, a standard deviation will be established from documented performance records of the producer consisting of a minimum of 15 consecutive 28 day compressive strength tests obtained within the last 12 months.

The standard deviation will be established as the product of the calculated standard deviation and multiplier.

NUMBER OF TESTS	MULTIPLIER FOR STANDARD DEVIATION
15	1.16
20	1.08
25	1.03
30 or more	1.00

Interpolate for intermediate number of tests.

(b) When past performance records are not available, the required average strength shall meet to the following:

Specified compressive strength, f_c', psi	Required average compressive strength, f_{cr}', psi
$f_c' < 3000$	$f_{cr}' = f_c' + 1000$
$3000 \leq f_c' \leq 5000$	$f_{cr}' = f_c' + 1200$
$f_c' > 5000$	$f_{cr}' = 1.10 f_c' + 700$

902.10.07 Standard of Control. The average of all sets of three consecutive strength tests shall equal or exceed the critical value as specified in 902.10.03 which shall be computed using the following formula:

Critical Value = fc' + (1.14 X S) – 500

Failure to conform to this criteria shall be cause for immediate investigation and remedial action up to and including suspension of production. A design standard deviation equal to 15 percent of the specified strength shall be used for calculation until a minimum of 15 test results are obtained.

The actual average strength and standard deviation shall be computed upon the availability of 28 day strength data comprising a minimum of 15 tests. Should this determination indicate an excessive margin of safety, the concrete mix may be modified to produce lower average strength as approved by the Engineer. If these calculations indicate a coefficient of variation greater than 15, the quality of the concrete and testing will be evaluated.

902.10.08 Testing. Sampling per T 141. Testing as follows:

TEST	METHOD	MINIMUM TEST FREQUENCY	RESPONSIBILITY
Temperature (e)	T 309	1 per 50 yd^3 (or fraction thereof)	Project Engineer
Slump (a)(e)	T 119	1 per 50 yd^3 (or fraction thereof)	Project Engineer
Air Content (a)(e)	T 152 T 196	1 per 50 yd^3 (or fraction thereof)	Project Engineer
Compression (b)(c)(d)	T 23	1 per 50 yd^3 (or fraction thereof)	Project Engineer
Compression (b)(c)(d) Mix No. 7 Only	T 23	3 per Day	Project Engineer

(a) A second test will be made when the first slump or air content test fails. Acceptance or rejection will be based on the results of the second test.
(b) Compressive strength tests are defined as the average of two companion cylinders.
(c) The Contractor shall be responsible for the making of all early break cylinders and furnishing the molds, stripping, curing/delivery of all cylinders, including 28 day cylinders, to the testing laboratory.
(d) The Project Engineer will be responsible for making, numbering and signing the 28 day cylinders.
(e) When constructing plain and reinforced concrete pavements, the testing frequency for slump, air content, and temperature shall be 1 per 100 yd^3 or fraction thereof.

902.10.09 Acceptance. Concrete will be acceptable if both of the following requirements are met:

(a) The average of all sets of three consecutive strength tests equal or exceed the specified design strength.

(b) No individual strength test (average of two companion cylinders) falls below the specified design strength by more than 500 psi.

902.10.10 Price Adjustment. A price adjustment will be based on the Contract unit price per cubic yard of concrete. If the unit is a lump sum item, the price per cubic yard for the concrete will be determined by dividing the cubic yards into the Contract lump sum price.

(a) Test Results More Than 500 psi Below the Specified Design Strength. Failing strength tests will be considered individually with a price adjustment being applied on the percentage basis as shown below.

(Price per yd^3) X (quantity of yd^3 represented by the failing concrete strength) X (percent of failure).

Example:

$$\$400.00 \text{ per } yd^3 \text{ X } 50\ yd^3 \text{ X } [1-(3600/\ 4500 \text{ psi})] = \$4{,}000.00$$

No payment will be allowed when the test results fall below 50 percent of the specified design strength for structural concrete or 40 percent for incidental concrete.

The Engineer will determine when the strength of the concrete represented by the failing tests is sufficient to remain in place or whether it must be removed and replaced with Specification concrete.

(b) Test Results 500 psi or Less than the Specified Design Strength. Strength failures 500 psi or less than the specified design strength will be averaged with the next two consecutive tests. If those two tests include a failure greater than 500 psi, those tests will be evaluated as in 902.10.10(a) and replaced with the next consecutive test. If the resulting average falls below the specified design strength, a price adjustment will be applied as specified in the table below. Any failure will only be included in one grouping.

STRENGTH BELOW THE SPECIFIED (avg of 3 tests) DESIGN LEVEL, psi	ADJUSTMENT FACTOR
MIX NO. 1 THRU MIX NO. 7	
1 – 100	0.005
101 – 200	0.01
201 – 300	0.02
301 – 400	0.04
401 – 500	0.08

Adjustment price equals (price per yd^3) X (quantity of yd^3 represented by the failing cylinders) X (the adjustment factor).

Example:

$400.00 per yd^3 X 50 yd^3 X 0.01 = $200.00

902.11 MORTAR FOR GROUT. Mortar used for grouting anchor bolts, pipe, handrail posts, and miscellaneous items shall be composed in accordance with one of the following:

(a) One part Portland cement or blended hydraulic cement and one part mortar sand by dry loose volume.

(b) Prepared bag mixes consisting of Portland cement or blended hydraulic cement and mortar sand. The prepared mixes shall produce a mortar meeting the strength requirements specified in the Contract Documents.

(c) Use nonshrink grout when specified. The grout shall have a minimum compressive strength of 5000 psi in seven days when tested as specified per T 106, except that the cube molds shall remain intact with a top firmly attached throughout the curing period. The nonshrink grout shall have a minimum expansion of 0.0 percent after seven days when tested as specified per T 160.

(d) Epoxy grout shall consist of sand and epoxy mixed by volume in per the manufacturer's recommendations. The grout shall be capable of developing a minimum compressive strength of 6500 psi in 72 hours when tested per MSMT 501. Sand for epoxy grout as specified in 901.01.

(e) An epoxy or polyester anchoring system may be used when approved by the Engineer in accordance with the manufacturer's recommendations. Strength values shall be as specified in the Contract Documents.

902.12 LINSEED OIL. Shall consist of a 50-50 mixture (by volume) of boiled linseed oil meeting Federal Specification TT-L-190 and kerosene per D 3699.

902.13 LATEX MODIFIED CONCRETE. Portland cement concrete containing prequalified Laboratory approved styrene butadiene latex emulsion is defined as Latex Modified Concrete (LMC).

Latex emulsion shall have a minimum of 90 percent of the nonvolatiles as styrene butadiene polymers. The latex emulsion as specified in Table 902.13 A. The material shall be stored in suitable containers and be protected from freezing and exposure to temperatures in excess of 85 F.

LMC shall be proportioned using volumetric mixing and designed as follows:

LATEX MODIFIED CONCRETE	
MATERIAL	**SPECIFICATION LIMITS**
Portland Cement, CWT/yd^3, min	6.6
Latex Emulsion/Cement Ratio	0.31 – 0.34
Water/Cement Ratio, max	0.22
Entrained Air, %	6.0 ± 3
Slump, in.	5 ± 1

The physical properties of LMC shall conform to Table 902.13 B. The Contractor shall furnish the necessary 3 X 6 in. molds per M 205 to be used for the fabrication of compressive strength cylinders.

Control and Acceptance Sampling.

(a) Submit a two qt minimum sample, of the styrene butadiene latex emulsion to the AME daily for each lot of material used in a day's production.

(b) A batch for LMC is defined as the capacity of the equipment being used on the project. Slump and air samples will be taken and tested before the placement of a batch is permitted. The slump shall be measured four to five minutes after discharge from the mixer. The test material shall be deposited off the deck and not be disturbed during this

waiting period. One additional sample for slump and air will be taken randomly during the placement of each batch. For seven day compressive strength, two tests each per batch are required. A test is defined as consisting of two companion cylinders. The samples for these tests will be taken at random while the placement is in progress.

TABLE 902.13 A

REQUIREMENTS FOR CHEMICAL PROPERTIES OF LATEX EMULSION MATERIALS

PROPERTY	SPECIFICATIONS		QUALITY ASSURANCE TESTS	
	LIMITS	TOLERANCE	PREQUALIFICATION TESTS	CONTROL AND ACCEPTANCE
Color	White	—	X	X
pH	9.0 – 11.0	—	X	X
Weight, lb/gal	8.40 – 8.47	—	X	X
Solids Content, %	46 – 53	—	X	X
*Butadiene Content, % of polymer	30 – 40	—	—	—
Viscosity @ 10 rpm-cps	Match Original	± 20	X	X
*Surface Tension, dynes/cm max	50	—	—	—
*Mean Particle Size, polymer – Å	1400 – 2500	—	—	—
Coagulum, % max	0.10	—	X	X
*Freeze-Thaw Stability, coagulum, % max	0.10	—	X	X
Infrared Spectra of Latex Film	Match Original	—	X	X
Infrared of Alcohol, Soluble Portion of Latex	Match Original	—	X	X
Shelf Life, min	1 yr	—	X	—

Note 1: Quality assurance tests shall be conducted as specified in MSMT 612 except those denoted by an * shall be conducted as specified in FHWA RD – 78-35.

Note 2: The original or prequalification sample shall be accompanied by the producer's certification on all of the tests and properties noted above and as specified in TC-1.03. The certification shall contain actual test values of the product and the infrared spectrograph.

Note 3: A separate certification is required for each lot of material. The certification shall note the date of manufacture, lot size, and whether or not the material is identical to the formulation of the original sample.

TABLE 902.13 B

LATEX MODIFIED CONCRETE PHYSICAL PROPERTIES			
TEST PROPERTY	TEST VALUES	QUALITY ASSURANCE TESTS	
		PREQUALIFIED TESTS	CONTROL AND ACCEPTANCE
7 Day Compressive Strength, psi min	3000	X	X
28 Day Compressive Strength, psi min	3500	X	—
42 Day Compressive Strength, psi min	3500	X	—
7 Day Flexural Strength, psi min	550	X	—
28 Day Flexural Strength, psi min	650	X	—
42 Day Shear Bond Strength, psi min	2000	X	—
Durability Factor, 300 cycles, % min	85	X	—
Chloride Permeability, Ppm max	510	X	—
Scaling Resistance, 50 cycles, max	3	X	—

Note 1: Quality assurance tests shall be conducted as specified in MSMT 721.

Note 2: Seven Day Compressive Strength Test will be used for Control & Acceptance of the material. The minimum specified design strength is 3000 psi at seven days. The mix design approval and acceptance will be based on a coefficient of variation of 10 percent with a probability of 1 in 10 tests falling below the specified strength. Only test values 80% or greater than the specified strength will be accepted

902.14 RAPID HARDENING CEMENTITIOUS MATERIALS FOR CONCRETE PAVEMENT REPAIRS. Materials shall be a dry, packaged cementitious mortar having less than 5 percent by weight of aggregate retained on the 3/8 in. sieve and meet the following requirements:

Classification.

Class I — For use at ambient temperatures below 50 F.
Class II — For use at ambient temperatures of 50 to 90 F.
Class III — For use at ambient temperatures above 90 F.

Chemical Requirements. C 928 except that no organic compounds such as epoxy resins or polyesters as the principal binder.

Physical Requirements. Meet the following when tested per MSMT 725:

COMPRESSIVE STRENGTH, psi min				
CLASSIFICATION	**< 2 hr**	**2-6 hr**	**6 hr**	**28 days**
Type I — Slow	—	—	2000	4500
Type II — Rapid	—	2000	—	4500
Type III — Very Rapid	2500	—	—	4500

TEST RESULTS	
TEST PROPERTY	**LIMITS**
Bond Strength, 7 days, psi min	2000
Length Change, increase after 28 days in water, based on length at 3 hr, % max	+ 0.15
Length Change, decrease after 28 days, % max	- 0.15
Freeze Thaw, loss after 25 cycles in 10% $CaCl_2$ solution, % max	8
Initial Setting Time, minutes min	10

Marking. All packages delivered to the project shall be marked with the following information:

(a) Date material was packaged.

(b) Approximate setting time.

(c) Recommended dosage of water or liquid component.

(d) Mixing instructions.

(e) Class or temperature range.

Certification. The manufacturer shall furnish certification as specified in TC-1.03 showing the actual test results for each class and type of material submitted to the Laboratory.

902.15 SYNTHETIC FIBERS. When synthetic fibers are specified in the Contract Documents, the fibers shall be 1/2 to 1-1/2 in. long and conform to C 1116, Type III. The manufacturer shall furnish certification as specified in TC-1.03. The quantity of fibers used and their point of introduction into the mix shall conform to the fiber manufacturer's recommendations.

902.16 CONTROLLED LOW STRENGTH MATERIAL.

902.16.01 Usage. Controlled Low Strength Material (CLSM) shall consist of the types described below:

TYPE A – Used where future excavation of the CLSM may be necessary (e.g. utility trenches, pipe trenches, bridge abutments, and around box culverts).

TYPE B – Used where future excavation of the CLSM is not anticipated (e.g. filling abandoned conduits, pipes, tunnels, mines, etc. and replacing unsuitable soils below roadway and structure foundations where extra strength is required).

902.16.02 Materials.

Coarse Aggregate	901.01*
Fine Aggregate	901.01
Cement	902.03 and 902.04
Concrete Admixtures	902.06
Fly Ash	902.06.04
Water	921.01

*maximum size of 3/4 in.

Produce CLSM in conformance with the applicable portions of Section 915 and the following:

902.16.03 Proportioning. Submit the sources and proportions of materials, and test data for each CLSM mixture prior to construction. CLSM shall be proportioned, on the basis of field experience and/or laboratory trial mixtures, to produce a flowable and self-compacting mixture meeting the requirements of 902.16.04.

CLSM shall be proportioned by weight; with the exception of water and chemical admixtures. Water and chemical admixtures may be proportioned by volume or weight.

902.16.04 CLSM Mixtures. Proportion CLSM with sufficient amounts of Portland cement, fly ash, or ground granulated blast furnace slag; individually or in combination, to produce a cohesive, non-segregating mixture that conforms to the physical properties in the following table:

CLSM Mix	28 Day Compressive Strength, (psi) ASTM D4832	Flow Consistency, (in.) ASTM D6103
Type A	50 - 200	8 min.
Type B	500 min.	8 min.

CATEGORY 900
MATERIALS

SECTION 904 – PERFORMANCE GRADED ASPHALT BINDERS AND HOT MIX ASPHALT

684 **DELETE: 904.04.02 Mix Design** in its entirety.

INSERT: The following.

904.04.02 Mix Design. Develop Superpave mix designs in conformance with R 35, except replace "Table 1, Superpave Gyratory Compaction" with the following:

DESIGN LEVEL	20-Year Design Traffic, ESALs	Ndesign
1	<300,000	50
2	300,000 to <3,000,000	65
3	3,000,000 to <10,000,000	80
4	10,000,000 to <30,000,000	80
5	≥30,000,000	100

Design HMA Superpave mixes to conform to the specification for Superpave Volumetric Mix Design, M 323, and design the mixes for the Equivalent Single Axle Loading (ESAL) range specified in the Contract Documents.

Crushed, reclaimed asphalt pavement (RAP) and a maximum of 5 percent asphaltic roofing shingles from manufacturing waste may be selected for use. Determine the allowable percentage and its suitability for use in conformance with MSMT 412 and M 323. Binder grade adjustments are not required when using less than 20 percent RAP or RAP/shingle combination.

Test and evaluate surface mixes consisting of 20 percent or more RAP, and base mixes consisting of more than 25 percent RAP in accordance with TP 62 to determine plant mixing capabilities. Demonstration strips or mix verifications may be required before placement.

RAP (not exceeding 15 percent) may be considered for applications where higher polish value aggregates are required or in mixes requiring elastomer type polymer binder. OMT will grant approval for use on an individual project basis and will designate placement areas within the project limits. RAP (between 11 and not exceeding 15 percent) used for these applications shall be from an identified single source and stored in isolated stockpiles. Submit documentation of stockpile management, quality, and traceability for approval prior to use.

Do not use crushed glass in surface mixes. Do not use roofing shingles in gap-graded mixes or mixes requiring elastomer type polymer binder.

CATEGORY 900
MATERIALS

SECTION 908 — REINFORCEMENT STEEL

703 **DELETE:** 908.07 thru .10 in their entireties.

INSERT: The following.

908.07 FABRICATED STEEL BAR MATS. Steel shall meet A 184.

908.08 WIRE FABRIC FOR PNEUMATICALLY APPLIED MORTAR AND CONCRETE ENCASEMENT. Fabric shall meet A 185 and be galvanized as specified in 906.01.01. Fabricate from size W1.4 wire on 3 in. centers in each direction or from W0.9 wire on 2 in. centers in each direction.

908.09 COLD DRAWN STEEL WIRE. Concrete reinforcement shall meet M 32.

908.10 TIE DEVICES FOR CONCRETE PAVEMENT. Tie device sizes shall be as specified and produce a frictional force of at least 160 lb/ft per foot of spacing when tested per MSMT 512.

908.11 STEEL STRAND. M 203, Grade 270, Low Relaxation Strand.

CATEGORY 900
MATERIALS

740 **DELETE:** SECTION 916 — SOIL AND SOIL-AGGREGATE BORROW in its entirety.

INSERT: The following.

SECTION 916 — SOIL AND SOIL-AGGREGATE BORROW

916.01 BORROW EXCAVATION. A soil or soil aggregate mixture meeting the following:

Maximum dry density and optimum moisture content of the material per T 180, Method C unless the material has more than 35 percent retained on the No. 4 sieve, in which case Method D shall be used. Material with a maximum dry density of less than 100 lb/ft^3 is unsatisfactory and shall not be used in embankments. Potentially expansive materials, such as steel slag, are prohibited.

Refer to the Recycled Materials Special Provisions located elsewhere in the Contract Documents.

BORROW REQUIREMENTS

Class Borrow	Max Dry Density Minimum P.C.F. T 180	LL Maximum T 89	PI Maximum T 90	Gradation Requirements T 88	Reference MSMT Soil Classification	Reference AASHTO Classification
Select Borrow	105	34	7	30% max passing No. 200 sieve	A-2,A-3, A-2-4	A-1-a, A-1-b, A-3, A-2-4
Capping Borrow	105	34	7	30% max passing No. 200 sieve*	A-2,A-3, A-2-4	A-1-a, A-1-b, A-3, A-2-4
Modified Borrow	125	30	9	50% min.retained on No. 4 sieve	Any material except A-5	A-2-4, A-4**
Common Borrow	100	N/A	N/A	N/A	N/A	N/A

* When material has no liquid and plastic limit, and the amount of material that passes the No 4 sieve and retained on the No. 10 sieve is less that 10 percent of the total sample mass, the material shall have at least 15 percent passing the No. 200 sieve.
** When A-4, the material has to be a manufactured product.

CATEGORY 900
MATERIALS

789 **DELETE:** SECTION 925 — DETECTABLE WARNING SURFACES in its entirety.

INSERT: The following.

SECTION 925 — DETECTABLE WARNING SURFACES

925.01 GENERAL. Detectable warning surfaces shall conform to the current accessibility guidelines of the Americans with Disabilities Act (ADA). The Office of Materials Technology (OMT) maintains a Qualified Products List (QPL). Manufacturers seeking inclusion of their product on the QPL shall submit certified test results showing conformance to the properties in 925.07, as well as installation instructions and the types of adhesives and sealants required.

925.02 COMPOSITION. Warning surfaces shall be either flexible or rigid. If there is a change in the composition of a qualified product, the manufacturer shall notify OMT and submit new test results showing conformance with 925.07.

925.02.01 Pavers. Type III Brick Pavers shall conform to the requirements of C 902, Class SX, Type 1, and Application PX. The pavers shall be 2-1/4 x 4 x 8 in. with square edges and a surface meeting 925.03.

925.03 CONFIGURATION AND DIMENSIONS. The warning surface shall consist of a system of truncated domes having a base diameter of 0.9 in. to 1.4 in., a top diameter 50 to 65 percent of the base diameter, and a height of 0.2 in. The domes shall be arranged in a square grid with center-to-center spacing of 1.66 to 2.35 in.

925.04 COLOR. The color shall be homogeneous across the surface of the material and contrast with adjoining surfaces.

925.05 IDENTIFICATION. The top surface shall have an identifier that uniquely distinguishes the manufacturer. Brick pavers are excluded.

925.06 REQUIREMENTS.

TYPE	DESCRIPTION	PHYSICAL TEST REQUIREMENTS
Type I	Cast in Place	A, B, C, D, E, G
Type IIa	Surface Mount, Rigid	A, B, C, D, E, G
Type IIb	Surface Mount, Flexible	A, B, C, D, F, G
Type III	Brick Pavers	925.02.01
Type IV	Prefilled Pavers	A, B, C, D, G

925.07 PHYSICAL PROPERTIES.

	PROPERTY	TEST METHOD	SPECIFICATION LIMIT
A	Slip Resistance Coefficient	C 1028 (dry method)	0.80 minimum
B	Abrasive Wear, index	C 501	150 minimum
C	Fade (UV) Resistance/Color Retention	D 4587	Fade or Change in color after 2000 hours less than $\Delta E = 5$*
D	Freeze/Thaw Resistance	C 1026	No disintegration
E	Adhesion/Bond Strength, pull off	C 482/C 882(as appropriate)	No adhesion failure
F	Adhesion/Bond Strength, peel	D 903/D 429 (modified as appropriate)	No adhesion failure
G	Contrast	Contrast percentage formula** using E 1349 to determine cap Y brightness/light reflectance values (LRV)	Current ADA requirement***

* Chromaticity coordinates (L*a*b* system) checked in conformance with D 2244, before and after test.

** Contrast % = $[(B_1 - B_2)/B_1] \times 100$,

where B_1 = (LRV) of the lighter area, and B_2 = (LRV) of the darker area.

*** For the purpose of determining whether a material meets acceptable contrast criteria, use actual cap Y brightness of detectable warning surface, and assume a value of 15 for the cap Y brightness of cured concrete, or a value of 3 for asphalt wearing surfaces to determine percentage difference. Detectable warning surfaces to be installed on other materials are required to undergo additional testing.

CATEGORY 900
MATERIALS

SECTION 951 — PAVEMENT MARKING MATERIALS

951.01 NONTOXIC LEAD FREE WATERBORNE PAVEMENT MARKINGS

All nontoxic lead free waterborne pavement marking materials shall be ready-mixed, pigmented binder, emulsified in water, and capable of anchoring reflective beads that are applied separately.

The pavement marking material shall not contain any hazardous material listed in the Environmental Protection Agency Code of Federal Regulations (CFR) 40, Section 261.24, Table 1.

951.01.01 Waterborne Physical Requirements. The nontoxic lead free waterborne pavement marking material shall conform to the manufacturer's formulations as initially approved for use by the Administration and shall be controlled from batch to batch. All paint shall be evaluated in conformance to the requirements listed below.

Production batch samples will be subject to random tests, such as but not limited to, X-ray spectroscopy, infrared spectroscopy, ultraviolet spectral analysis, and atomic absorption spectroscopy.

The combined total of lead, cadmium, mercury, and hexavalent chromium shall not exceed 100 ppm, when tested by X-ray fluorescence spectroscopy, or other method capable of detection at this level.

For each production batch, the Contractor shall provide the Administration with the manufacturer's certified analysis conforming to TC-1.02 of the Standard Specifications.

(a) Viscosity. The viscosity shall be 85 ± 10 KU when tested in conformance with D 562.

(b) Pigment For Yellow Pavement Marking Material. The colorants used to attain the color of the yellow product shall be one or more of the following, along with titanium dioxide: Pigment Yellow 65, Pigment Yellow 75, and opaque Pigment Yellow 74.

(c) Color and Appearance. Color and appearance shall be evaluated using the following: CIE 1976 L*a*b*, illuminant D 65, and standard observer angle 1931 CIE 2 degrees. The geometry shall be 45/0 or 0/45, or d/8, excluding specular gloss. Measurements shall be taken from samples applied to an opacity chart, e.g., Leneta Form 2A, at a wet film thickness of 15 mils ± 1 mil. The applied sample shall have been allowed to dry for at least 12 hours before measurements are taken. The evaluation shall be as follows:

(1) Production: The color of the dry paint film of the production sample shall match the L*a*b* values provided, under the specified conditions. For white material the values are: L* = 94.80, a* = -2.35, b* = 3.20. For yellow material the values are: L* = 80.70, a* = 19.40, b* = 88.65. The colors shall match when compared instrumentally.

(2) Control. The maximum permissible variation from the specified L*a*b* values shall be 2.0 ΔE_{cmc}. The measurements shall be taken from a sample applied over the black portion of an opacity chart.

The Administration will approve or disapprove any batch based on a laboratory visual evaluation for blemishes and irregularities in the test specimen (i.e. cracks, flaking, surface depressions, pooling, etc.) that would interfere with the measurement of color and appearance on the opacity chart. The Administration will make the final decision.

(3) **Reflectance**. The reflectance, without beads, and using CIE XYZ Yxy, shall be a minimum Y of 80 percent for white production batches; and a minimum of 50 percent for yellow production batches with a maximum of 60 percent. The measurement shall be taken from a sample applied over the black portion of an opacity chart.

(4) **Color Difference over Black and White.**. For any production batch the measured color difference between readings taken over the black portion of the opacity chart from those taken over the white portion shall be a maximum value of 1.0 ΔE_{cmc} for white products and 1.3 ΔE_{cmc} for yellow products.

(5) **Yellowness Index**. The yellowness index of the white material, when determined according to E 313, Using Equation 1 and the coefficients for CIE D 65 illumination, 1931 from Table 1 in that standard, shall not exceed 8.0.

(d) **Flexibility**. The pigmented binder shall not display cracking or flaking when subjected to the flexibility test of Federal Test Method TT-P 1952D, with the exception that the panels shall be 35 to 31 gauge (0.0078 to 0.0112 in.) tin plate approximately 3 x 6 in. The tin plates shall be lightly buffed with steel wool and thoroughly cleaned with solvent and dried before being used for the test.

(e) **Weight per Gallon**. The weight per gallon for a production batch, when determined according to D 1475, shall be within ± 0.3 lb/gal of the value obtained by The National Transportation Product Evaluation Program (NTPEP), and reported on a NTPEP deck designated "north". When the Administration waives the NTPEP requirements, another target value will be stipulated.

951.01.03 Glass Bead Physical Requirements. Each lot of glass beads shall be sampled in conformance with the Administration's Frequency Guide and shall be submitted to the Administration's Office of Materials and Technology for testing and approval prior to use.

Glass beads shall be colorless, clean, transparent, and free of milkiness and excessive air bubbles.

Reflective glass beads shall conform to M 247, except that the gradation shall conform to the following:

PERCENT PASSING			
SIEVE SIZE	**Standard Beads**	**Large Beads**	**Maryland Blend**
12 (1.70 mm)	—	100	100
14 (1.40 mm)	—	95 – 100	98 – 100
16 (1.18 mm)	—	80 – 95	88 – 97
18 (1.00 mm)	—	10 – 40	48 – 70
20 (0.85 mm)	100	0 – 5	28 – 50
30 (0.60 mm)	75 – 95	—	—
50 (0.30 mm)	15 – 35	—	5 – 25
80 (0.18 mm)	—	—	0 – 5
100 (0.15 mm)	0 – 5	—	—

Moisture resistance and flotation test are not required.

(a) **Refractive Index.** The refractive index shall be 1.50 minimum, when tested in conformance with MSMT 211.

(b) **Roundness.** Glass beads shall be smooth, spherical in shape, free of sharp angular scars, scratches, or pits, and shall contain a minimum of 60 percent silica. Beads shall have a minimum average roundness of 75 percent when tested in conformance with D 1155.

951.01.04 Qualification. Pavement marking material manufacturers desiring to have their material formulations approved under this Special Provision shall have their formulations evaluated on a NTPEP North Test Deck unless waived by the Administration. Only NTPEP evaluated formulations will be considered candidates for selection, unless the requirement is waived.

951.01.05 Field testing. Materials conforming to this specification shall be field evaluated for performance on a NTPEP North Test Deck. Materials performing satisfactorily throughout the test period will be placed on the Administration's Qualified Products List. All marking materials supplied under the Contract Documents shall be identical in composition to the materials submitted for initial NTPEP testing. The Office of Materials and Technology will determine conformity with these requirements.

951.01.06 Material Acceptance. Only Administration approved and stamped materials conforming to these Specifications shall be used.

Prior to the shipment of any pavement marking material batch, the manufacturer shall provide access for the Administration's representative to collect samples of the material from each production batch. The samples shall be sent to the Administration laboratory for QA testing. Each sample shall be accompanied by a certified analysis conforming to TC 1.02, showing compliance with the physical and chemical requirements of this Specification, and a statement certifying that any marking material supplied under the Contract Documents is identical in composition to the material submitted for initial NTPEP testing. The Administration will

determine conformity with these requirements. Administration authorization shall be required before a batch or a portion of a batch is shipped.

Paints shall be compatible with cleaning solvents used in equipment cleaning.

Nontoxic waterborne pavement markings shall not skin, curdle, settle or be unusable or difficult to apply within 12 months of the date of manufacture. The supplier, at the Administration's request, shall replace containers of marking material exhibiting an unacceptable level of settling, skinning, or curdling, as determined by the Administration. Marking material from a production batch shall not be used beyond 12 months after the date of manufacture.

951.01.07 Certification. The manufacturer shall explicitly certify in writing that any marking material supplied under the Contract Documents conforms to the formulation identified by the same product code or name placed on the NTPEP test deck from which it was approved. The same code or name as used in the published report from that test deck must identify the product. Failure to certify will be considered grounds for product batch rejection.

The manufacturer shall, in accordance with TC-1.02, explicitly certify, in writing, of any paint batch supplied under the Contract Documents that it complies with all applicable specifications. Failure to so certify will be considered grounds for product batch rejection. Certification for yellow nontoxic lead free waterborne pavement markings shall include, for the purpose of showing compliance with this specification, the name or the type of colorant used to achieve the yellow color. The Administration will keep the paint composition and chemical analysis information confidential.

The Certification shall also, contain the following:

(a) Manufacturer's name.

(b) Place (address) of manufacture.

(c) Color of material.

(d) Date of manufacture (month-day-year).

(e) Lot or batch identification.

(f) Size of lot/batch.

(g) The recommended paint temperature at the spray gun.

(h) Material Safety Data Sheets for all materials submitted for testing and application.

The Contractor shall furnish a copy of this certification to the Administration's representative before applying the paint batch it represents.

951.01.08 Production Facility.

(a) The producer shall have a facility, presently in operation, capable of producing the traffic paint in the quantity and quality required by the Administration. This facility will be subject to the Administration's approval.

(b) The producer shall have a laboratory, subject to the Administration's approval, that is capable of performing the required tests.

CATEGORY 900
MATERIALS

SECTION 951 — PAVEMENT MARKING MATERIALS

951.02 LEAD FREE REFLECTIVE THERMOPLASTIC PAVEMENT MARKINGS. All materials composing the reflective thermoplastic material shall be lead free. Reflective thermoplastic material shall be homogeneously composed of pigment, filler, resins and glass beads and shall conform to the following.

951.02.01 Reflective Thermoplastic Components.

(a) Composition.

COMPONENT	TEST METHOD	COLOR	
		WHITE	YELLOW
Binder, % min	Certified	18.0	18.0
Premixed Reflective Beads, % min	MSMT 614	30.0	30.0
Titanium Dioxide, % min	X-Ray Fluorescence	10.0	N/A
Calcium Carbonate Inert fillers, % max	D 34	42.0	*
Yellow Pigment, %	—	N/A	*

* Amount of yellow pigment, calcium carbonate and filler shall be at the option of the manufacturer, provided all other requirements are in conformance.

Restrictions. The combined total of lead, cadmium, mercury and hexavalent chromium shall not exceed 100 ppm when tested by X-Ray Fluorescence, ICP, or comparable method capable of this level of detection. Diarylide type pigments shall only be used when the manufacturer or pavement marking material application temperature does not exceed 392 F.

(b) Binders. The binder shall be alkyd consisting of maleic modified glycerolester of resin and other plasticisers.

(c) Titanium Dioxide. The titanium dioxide shall be rutile type.

951.02.02 Reflective Thermoplastic.

(a) Physical Properties.

TEST PROPERTY	TEST METHOD	SPECIFICATION LIMITS
Bond Strength, psi min.	MSMT 614	180
Softening Point, F		215 ± 15
Low Temperature Stress Resistance	T 250	No Cracks

(b) Specific Gravity. The specific gravity of the white and yellow pavement marking material shall be 1.7 to 2.2 when tested in conformance with D 153, Method A at 77 F.

(c) Color. After heating for 4 ± 0.5 hours at 425 ± 3 F, the thermoplastic shall be as specified in E 1347 and the following:

(1) Production. The color of the cured thermoplastic material film of the production sample shall match the Federal Standard 595 Color chips specified when compared by instrumental measurement.

(2) Control. Control color matching determinations will be made using a Pacific Scientific Color Machine, and an observation angle of 2°, and the CIE Chromaticity Coordinate Color Matching System under light source Illuminate C, with the following tolerances permitted between the standard chip and the cured thermoplastic film sample:

	WHITE Color No. 17886		YELLOW Color No. 13538	
	X	Y	X	Y
Standard Chip	0.310	0.330	0.480	0.450
Delta Tolerance	± 0.020	± 0.020	± 0.030	± 0.030

(3) Reflectance.

COLOR	TEST METHOD	DAYLIGHT REFLECTANCE at Degree	PERCENT MIN
White	Fed Std 595 No. 17886	45 - 0	80
Yellow	Fed Std 595 No. 13538	45 - 0	50

(d) Yellowing Index. The yellowing index of the white material shall not exceed 8 prior to QUV and 15 after QUV when tested in accordance with E 313.

951.02.03 Glass Beads Physical Requirements. The glass beads shall conform to M 247 and the following:

GRADATION SIEVE SIZE	PERCENT PASSING
	STANDARD BEADS
0.85 mm (No. 20)	100
0.60 mm (No. 30)	75 - 95
0.30 mm (No. 50)	15 - 35
0.15 mm (No. 100)	0 - 5

Glass beads shall be colorless, clean, transparent, and free of milkiness, excessive air bubbles, and essentially free of sharp angular scarring or scratching. The beads shall be spherical in shape and shall contain a minimum of 60 percent silica. Roundness shall be 75 percent minimum when tested as specified in D 1155, Procedure A.

Glass beads shall have a 1.50 minimum refractive index when tested in conformance with MSMT 211.

Glass beads shall not absorb moisture in storage and shall remain free of clusters or lumps.

951.02.04 Field Testing. Materials conforming to this specification shall be field evaluated at the National Transportation Product Evaluation Program (NTPEP) Northeast test deck for performance. Materials performing satisfactorily throughout the test period will be placed on the Administration's Prequalified Materials List. All marking materials supplied during the Contract shall be identical in composition to the materials submitted for initial testing. Conformity with these requirements will be determined by the Office of Materials and Technology (OMT).

951.02.05 Sampling for Preapproval. Sources supplying thermoplastic material and glass beads shall be submitted by the Contractor to the Engineer for approval in conformance with the Contract Documents.

Each lot of thermoplastic material will be sampled at the source and tested by the Administration over two construction seasons. If 95 percent of the lots tested conform to Specifications, source samples will no longer be required and the manufacturer may ship directly to the project. All shipments shall be accompanied by a manufacturer's certification in conformance with TC-1.02 and shall include the following:

(a) Manufacturer's name.

(b) Place of manufacture.

(c) Material color.

(d) Date of manufacture (month-year).

(e) Lot identification.

(f) Size/quantity of lot represented.

Random samples will be taken on the project in conformance with the MSMT Sample Frequency Guide and tested for conformance with these specifications. Nonconformance may result in the suspension from the certification program until conformance is reestablished. To reestablish conformance, the manufacturer shall achieve a 95 percent approval level from samples taken at the manufacturer's facility and tested by the Administration prior to shipment to Administration projects.

Each lot of glass beads shall be sampled in conformance with the MSMT Sample Frequency Guide and shall be submitted to the OMT for testing and approval prior to use.

Sampling will be by batch or lot which is defined as a maximum of 44 000 lbs of material.

951.02.06 Certification. The Contractor shall furnish notarized certification as specified in TC-1.02. The manufacturer shall certify that any reflective thermoplastic materials supplied during the Contract conforms to the identical formulation as the samples submitted for evaluation on the NTPEP Northeast test deck, and identify the formulas by referring to the code used on the deck. Reflective thermoplastic materials which fail to conform will be rejected.

The manufacturer shall also provide the following:

(a) Material Safety Data Sheets for all materials submitted for testing and use.

(b) A facility, presently in operation, capable of producing the reflective thermoplastic materials in the quantity and quality required by the Administration.

(c) A laboratory subject to the Administration's approval which is capable of performing the required tests.

CATEGORY 900
MATERIALS

SECTION 951 — PAVEMENT MARKING MATERIALS

951.04 REMOVABLE PAVEMENT MARKING TAPE. Removable pavement marking tape shall remain in place on the pavement surface without being displaced by traffic, or affected by weather conditions. The material shall be capable of being removed without the use of heat, solvents, grinding, or sand blasting and shall not leave an objectionable residue.

The material shall be of good appearance and free from cracks. Edges shall be true, straight and unbroken. Line marking material shall be in rolls having no more than three splices per 150 ft of length. All marking materials shall be packaged in conformance with accepted commercial standards and shall have a minimum shelf life of one year.

Performance Requirements. When applied in conformance with the manufacturer's recommendations, the material shall provide a neat, durable marking that will not flow or distort due to temperature if the pavement surface or underlying markings remain stable. The material shall be weather resistant and, through normal traffic wear, shall show no lifting or shrinkage that will significantly impair the intended usage of the tape throughout its useful life, and shall show no significant tearing while in place, or other signs of poor adhesion. The material shall be capable of easy removal without tearing into small pieces.

951.04.01 White and Yellow. Removable preformed pavement marking materials shall conform to the requirements of the MdMUTCD and the following:

(a) Composition. The marking material shall consist of a mixture of polymeric materials, pigment, and glass beads distributed uniformly throughout the surface.

(b) Color. The color of the marking materials shall match Federal Test Standard No. 595 for the following color numbers:

White - 37925
Yellow - 38907

(c) Glass Beads. Glass beads shall conform to the General Requirements of M 247 and have a minimum refractive index of 1.90 when tested as specified in MSMT 211.

(d) Frictional Resistance. The British Pendulum Number shall be a minimum of 50 when tested as specified in E 303.

(e) Certification. Samples submitted to the Office of Materials Technology (OMT) for testing shall be accompanied by the manufacturer's certified analysis in conformance with TC-1.02.

Any material supplied for a Contract shall be identical in composition to the material originally submitted for testing. Conformity will be determined by OMT.

(f) Field Testing. Line marking materials conforming to the Contract Documents will be field tested by The National Transportation Product Evaluation Program (NTPEP) and over 180 day period as specified in MSMT 723 for conformance with the following:

(1) Ease of Application - satisfactory.

(2) Removability - a minimum rating of 2.

(3) Residue Remaining at Time of Removal (day and night) - minimum rating of 2.

(4) Durability, Appearance, and Night Visibility - minimum weighted rating of 4.

(5) Loss or Movement - minimum rating of 2.

Upon satisfactory completion of the field testing, the marking materials will be placed on OMT's Qualified Products List. The material shall conform to all criteria for a minimum period of 120 days to be considered satisfactory.

951.04.02 Black. Removable preformed pavement marking materials shall conform to the requirements of the Md MUTCD and the following:

(a) Composition. The non-reflective blackout tape shall not contain metallic foil and shall consist of a mixture of high quality polymeric materials, pigments, and inorganic fillers distributed throughout its cross-sectional area, with a matte black non-reflective surface. The film shall be pre-coated with a pressure sensitive adhesive. A nonmetallic medium shall be incorporated to facilitate removal.

For patterned materials, a minimum of 20 percent of the total surface area shall be raised and coated with nonskid particles. The channels between the raised areas shall be substantially free of particles.

(b) Color. The color of the blackout material shall match Federal Test Standard No. 595 for the following color numbers:

Black - 37038 (or as approved by the Engineer)

(c) Frictional Resistance. The British Pendulum Number shall be a minimum of 50 when tested as specified in E 303.

(d) Certification. Samples submitted to OMT for testing shall be accompanied by the manufacturer's certified analysis in conformance with TC-1.02.

Any material supplied for a Contract shall be identical in composition to the material originally submitted for testing. Conformity will be determined by OMT.

(e) Field Testing. Line marking materials conforming to the Contract Documents will be field tested by The National Transportation Product Evaluation Program (NTPEP) and over a 180 day period as specified in MSMT 723 for conformance with the following:

(1) Ease of Application - satisfactory.

(2) Removability - a minimum rating of 2. The manufacturer shall show that the blackout tape can be manually removed after its intended use, intact or in large pieces, at temperatures above 40 F without the use of heat, solvents, grinding, or sand or water blasting. The blackout tape shall remove cleanly from existing markings that are adequately adhered to the pavement surface.

(3) Residue Remaining at Time of Removal (day and night) - minimum rating of 2.

(4) Durability, Adhesion, Appearance, and Night Visibility - minimum weighted rating of 4. The manufacturer shall demonstrate that the properly applied blackout tape adheres to the roadway and existing stable roadway markings under climatic and traffic conditions normally encountered in the construction work zone.

(5) Loss or Movement - minimum rating of 2.

Upon satisfactory completion of the field testing, the marking materials will be placed on OMT's Qualified Products List. The material shall conform to all criteria for a minimum period of 180 days to be considered satisfactory.

951.04.03 Packaging. Preformed pavement markings shipping package shall conform to the manufacturer's shipping requirements to prevent damage during delivery and unloading of all shipments. The shipping package shall be marked with the following information placed on each container:

(a) Description of item.

(b) Date of manufacture.

(c) Successful Bidder's Name.

(d) Purchase Order Number.

(e) Lot Number.

(f) Color.

(g) Installation instructions.

CATEGORY 900
MATERIALS

SECTION 951 — PAVEMENT MARKING MATERIALS

951.06 HEAT APPLIED PERMANENT PREFORMED THERMOPLASTIC PAVEMENT MARKING MATERIAL. The material shall be highly durable retroreflective polymeric materials designed for use as transverse lines, numbers, legends, symbols and arrow markings subjected to high traffic volumes and severe wear conditions such as shear action from crossover or encroachment.

The applied material shall adhere to hot mix asphalt (HMA), open-grade friction courses (OGFC), stone matrix asphalt (SMA), portland cement concrete (PCC), and any existing pavement markings when applied using normal heat from a propane fueled heat gun in conformance with manufacturer's recommendations.

The applied material shall be capable of conforming to pavement contours, breaks and faults, shall not be affected by weather conditions, and shall remain in place on pavement surfaces without being displaced by traffic.

The material shall have a minimum shelf life of one year.

The material shall conform to the requirements of the MUTCD and the following:

(a) Composition. The material shall consist of polymeric materials, pigments, binders and glass beads distributed throughout the entire cross-sectional area. The thermoplastic material shall conform to M 249 with the exception of the relevant differences for the material being supplied in the preformed state.

Restrictions. The combined total of lead, cadmium, mercury and hexavalent chromium shall not exceed 100 ppm when tested by X-ray diffraction, ICP, or comparable method capable of this level of detection. Nonleachable lead based pigments will not be permitted. Diarylide type pigments shall only be used when the manufacture or pavement marking material application temperature does not exceed 392 F.

(b) Color. Preformed markings shall consist of film with pigments selected and blended to match Federal Standard 595 color chip Nos. 17886 and 13538 for white and yellow respectively.

(c) Frictional Resistance. The surface of the applied material shall provide a minimum average skid resistance value of 50 BPN when tested in conformance with E 303.

(d) Patchability. The material shall be capable of use for patching worn areas of the same type in conformance with manufacturer's recommendations.

(e) Thickness. The minimum thickness, without adhesive, shall be 120 mils.

(f) Adhesion. The material shall retain a minimum of 65 percent adhesive bond after 100 cycles of freeze-thaw when tested in conformance with C 666, Method B.

(g) Beads.

(1) Index of Refraction. All beads shall meet the general requirements of M 247, Type I, and shall have a minimum index of refraction of 1.50 when tested using the liquid oil immersion method specified in MSMT 211.

(2) Acid Resistance. A maximum of 15 percent of the beads shall show a formation of a distinct opaque white layer on the entire surface after exposure to a 1 percent solution (by weight) of sulfuric acid in conformance with MSMT 211.

Field Testing. Materials conforming to this Specification shall be field tested at AASHTO regional test facilities, such as National Transportation Product Evaluation Program (NTPEP), for performance.

Materials performing satisfactorily throughout the test period, including exhibiting a minimum retained reflectance of 100 mcd/m^2/lux at the completion of the testing, will be placed on the Prequalified Materials List maintained by the Office of Materials and Technology.

Certification. Any marking material supplied during the Contract shall be identical in composition to the material submitted for initial testing. Samples submitted for testing shall be accompanied by the manufacturer's certified analysis in conformance with TC-1.02.

BALTIMORE CITY DETAIL PLATES

INCLUDED IN THIS SECTION ARE BALTIMORE CITY DETAIL PLATES THAT APPLY TO THIS PROJECT. THESE DETAILS INCLUDE THE FOLLOWING:

STORM DRAIN DETAILS ..... 20 Sheets

ROADWAY DETAILS ..... 6 Sheet

LIGHTING AND SIGNALS ..... 47 Sheets

CONDUITS AND MANHOLES ..... 13 Sheets

FIRE HYDRANT INSTALLATION ..... 1 Sheet

PARKING METER FOUNDATION ..... 4 Sheets

SIGNING ..... 1 Sheet

F.A.P. NO STP-3057 (4)N
SHA CONTRACT NO: BC320-001-815
BALTIMORE CITY CONTRACT NO. TR08310

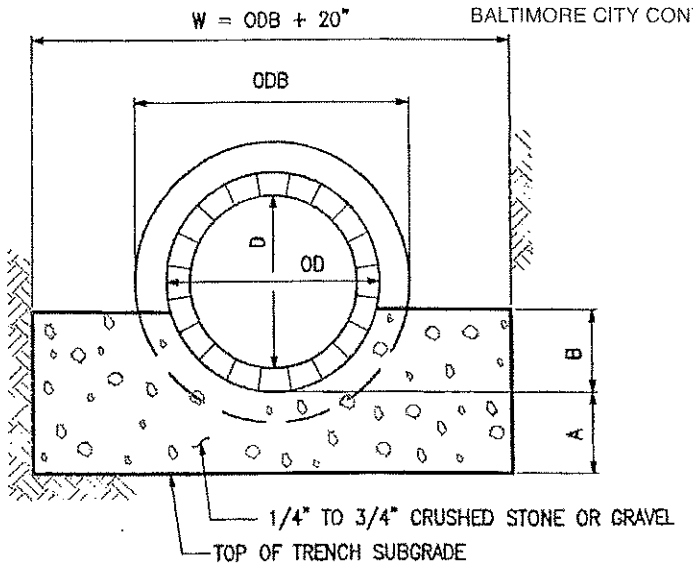

NOTES:

1. STONE (NO. 6 AGGREGATE) MAY BE SUBSTITUTED FOR GRAVEL.
2. WHEN 2 TIER TRENCH SUPPORT IS REQUIRED, ADD 24" TO "W" FOR CALCULATING THE AMOUNT OF PAVING NEEDED FOR TRENCH REPAIR.

REINFORCED CONCRETE PIPE					
DIMENSIONS					
D	OD	ODB	A	B	W
15"	19"	23"	7"	6"	43"
18"	22.5"	27"	7"	6"	47"
21"	25.75"	30.5"	7"	6"	50.5"
24"	29"	34"	7"	6"	54"
27"	32.25"	37.5"	7"	6"	57.5"
30"	36"	41.5"	7"	6"	61.5"
33"	39.5"	45.5"	7"	6"	65.5"
36"	42.75"	49"	8"	6"	69"
42"	50"	57.5"	8"	6"	77.5"
48"	57"	66"	9"	6"	86"
54"	64"	72.5"	9"	7"	92.5"
60"	72"	75.5"	6"	8"	95.5"
66"	79"	81"	6"	8"	101"
72"	86"	88"	6"	9"	108"

CITY OF BALTIMORE 1797	APPROVED: HEAD, BUREAU OF WATER AND WASTEWATER	CITY OF BALTIMORE DEPARTMENT OF PUBLIC WORKS BUREAU OF WATER AND WASTEWATER	ISSUED: 3/2008	REVISED	REVISED
	DIRECTOR, DEPARTMENT OF PUBLIC WORKS	GRAVEL CRADLE FOR RCP STORM DRAINS	DETAIL NO. BC 302.02		
			SCALE: NONE	SHEET 1 OF 1	

F.A.P. NO STP-3057 (4)N
SHA CONTRACT NO: BC320-001-815
BALTIMORE CITY CONTRACT NO. TR08310

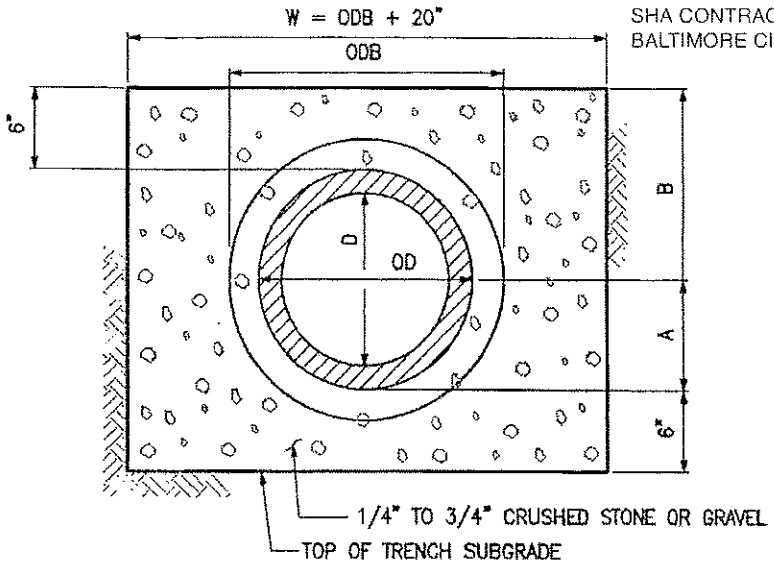

NOTES:

1. STONE (NO. 6 AGGREGATE) MAY BE SUBSTITUTED FOR GRAVEL.
2. WHEN 2 TIER TRENCH SUPPORT IS REQUIRED, ADD 24" TO "W" FOR CALCULATING THE AMOUNT OF PAVING NEEDED FOR TRENCH REPAIR.
3. HAUNCHING AREA (A) AROUND THE PIPE SHALL BE COMPACTED TO A MINIMUM 95% PROCTOR DENSITY. TAMPING SHALL BE DONE IN 4" LAYERS TO THE SPRING LINE. COMPACTION OF THE EMBEDMENT MATERIAL SHOULD BE DONE IN A WAY THAT THE COMPACTION EQUIPMENT WILL NOT DAMAGE THE PIPE OR CAUSE DEFLECTION OF/IN THE PIPE. WHEN HYDRO-HAMMERS ARE USED TO ACHIEVE COMPACTION THEY SHOULD NOT BE USED WITHIN 3' OF THE TOP OF PIPE AND THEN ONLY IF THE EMBEDMENT MATERIAL DENSITY HAS BEEN PREVIOUSLY COMPACTED TO A MINIMUM 85% PROCTOR DENSITY.

PVC PIPE						
DIMENSIONS						
D	OD	ODB	A	B	W	
					MIN	MAX
6"	6.25"	7"	3.13"	9.13"	30"	60"
8"	8.5"	9.5"	4.25"	10.25"	30"	60"
10"	10.5"	12"	5.25"	11.25"	30"	60"
12"	12.5"	14"	6.25"	12.25"	36"	60"
15"	15.25"	16.5"	7.63"	13.63"	42"	60"
18"	18.75"	20"	9.38"	15.38"	42"	66"
21"	22"	23.5"	11"	17"	48"	66"
24"	24.75"	26.5"	12.38"	18.38"	48"	72"
27"	28"	30"	14"	20"	54"	78"

APPROVED:
HEAD, BUREAU OF WATER AND WASTEWATER
DIRECTOR, DEPARTMENT OF PUBLIC WORKS

CITY OF BALTIMORE
DEPARTMENT OF PUBLIC WORKS
BUREAU OF WATER AND WASTEWATER

GRAVEL CRADLE FOR
PVC STORM DRAINS

ISSUED	REVISED	REVISED
3/2008		

DETAIL NO.
BC 302.03

SCALE: NONE | SHEET 1 OF 1

F.A.P. NO STP-3057 (4)N
SHA CONTRACT NO: BC320-001-815
BALTIMORE CITY CONTRACT NO. TR08310

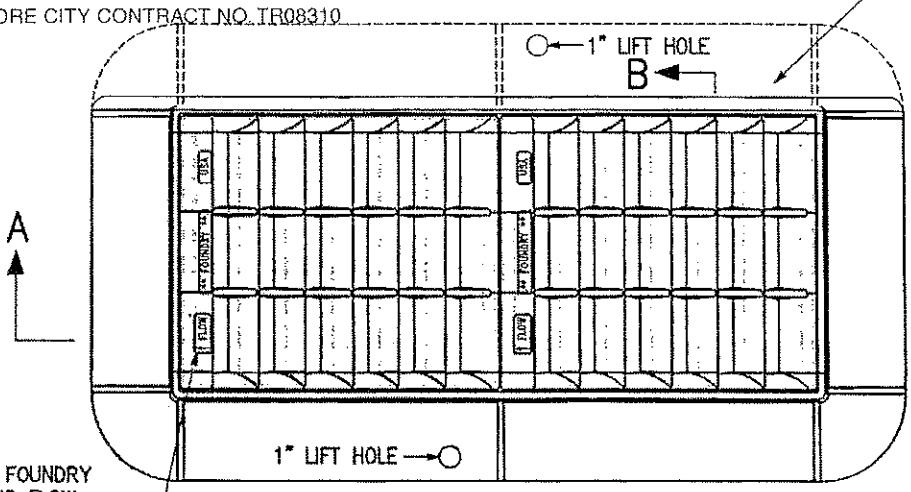

PLAN B

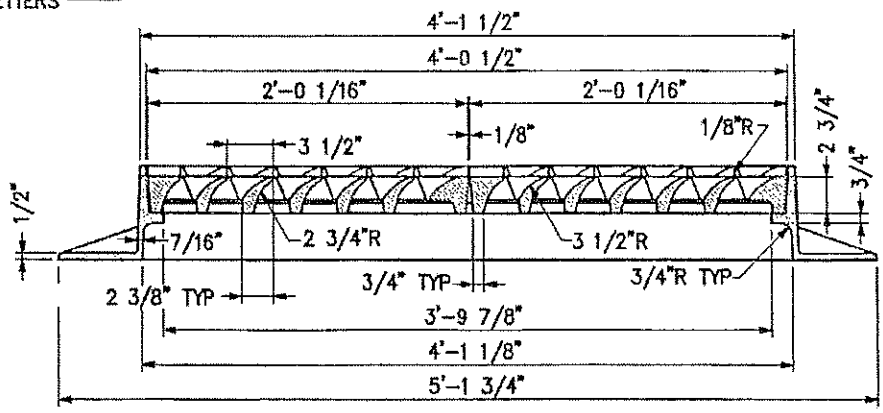

SECTION A-A

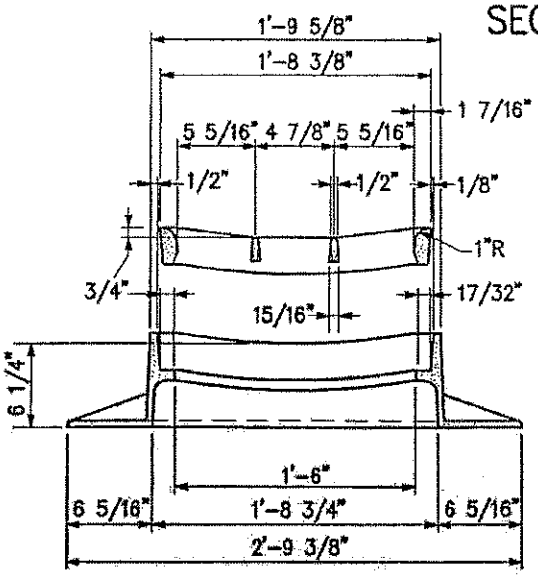

SECTION B-B

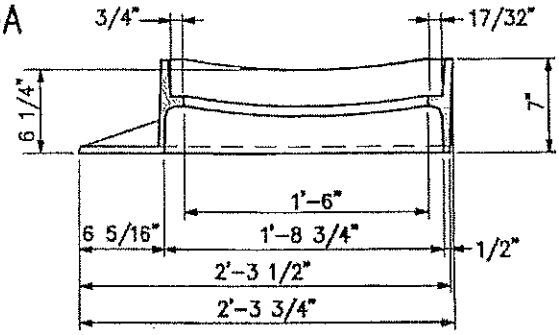

SECTION B-B
MODIFIED

NOTES:

1. GRATE(S) SHALL SIT SQUARE UPON FRAME SUPPORTS WITHOUT ROCKING OR SHIFTING UNDER LOAD. GRATE SHALL MEET OR EXCEED AASHTO M306 PROOF LOAD REQUIREMENTS.
2. MATERIAL: GRAY IRON CASTINGS AASHTO DESIGNATION M105-06.
3. WEIGHT: GRATE APPROXIMATELY 129 LBS EACH.

	APPROVED: HEAD, BUREAU OF WATER AND WASTEWATER DIRECTOR, DEPARTMENT OF PUBLIC WORKS	CITY OF BALTIMORE DEPARTMENT OF PUBLIC WORKS BUREAU OF WATER AND WASTEWATER	ISSUED	REVISED	REVISED
			3 / 2008		
		CURVED VANE (E-CV) GRATE(S) WITH CLASS 35 TYPE 'E' FRAME NEW CONSTRUCTION	DETAIL NO. BC 376.02		
			SCALE: NONE	SHEET 1 OF 1	

F.A.P. NO STP-3057 (4)N
SHA CONTRACT NO: BC320-001-815
BALTIMORE CITY CONTRACT NO. TR08310

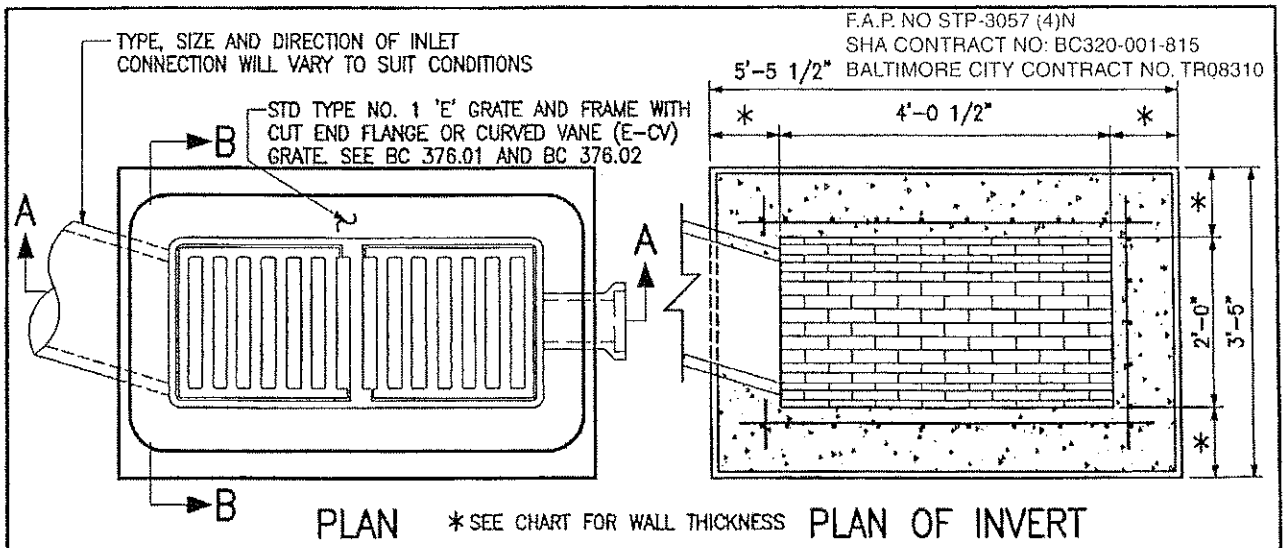

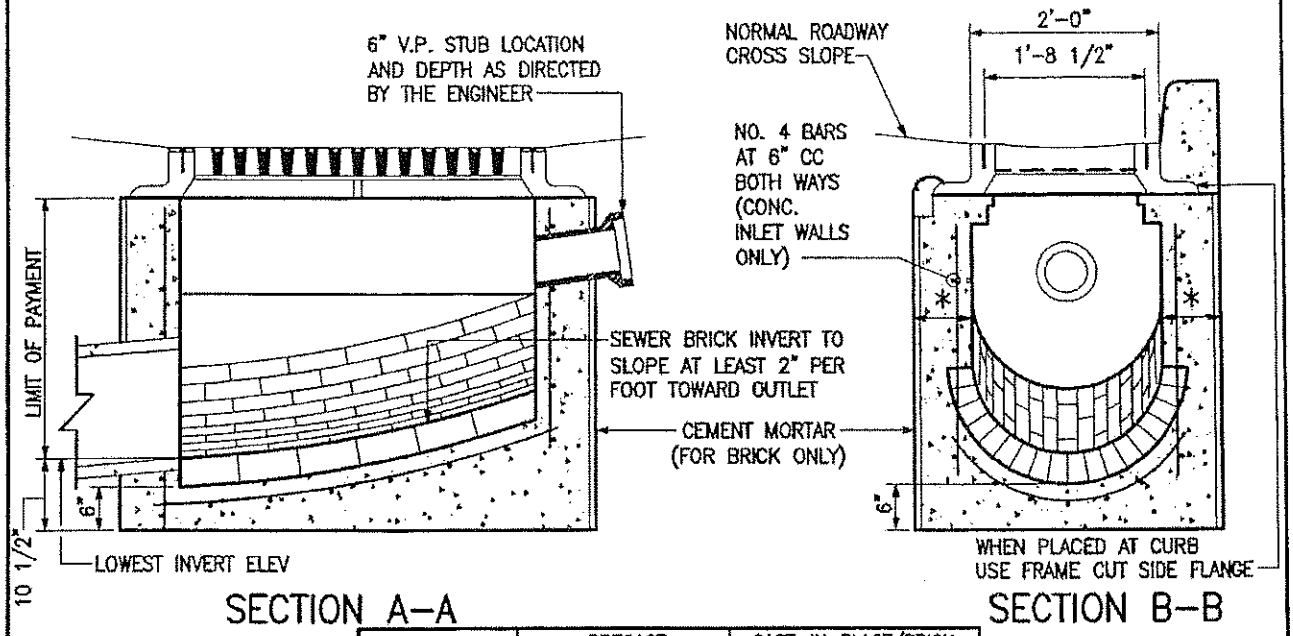

	PRECAST	CAST-IN-PLACE/BRICK
WALL THICKNESS	6" MIN	8 1/2 "
REINF	2 LAYERS- 4x4 W4.0 x W4.0- WWF	NO. 4 BARS @ 6" CC EW 2" COVER
CONCRETE	MIX 6	MIX 3
ALLOWABLE DEPTH	DPW APPROVAL REQUIRED OVER 15'	

NOTES:

1. INLET MAY BE CONSTRUCTED OF BRICK, CAST IN PLACE OR PRECAST MIX 3 CONCRETE WITH NO. 4 DEFORMED BARS AT 6" CC BOTH WAYS. 2" CLEAR FROM FACE OF INSIDE WALL. SEE LATEST DPW SPECIFICATIONS FOR INLETS.
2. TOP 4" OF PRECAST/CONCRETE WALLS MAY BE BRICK MASONRY TO BRING GRATE TO REQUIRED GRADE.
3. PLACE 1/4" EXPANSION MATERIAL BETWEEN FRAME AND ABUTTING RIGID PAVEMENT; AND BETWEEN ENDS OF INLET CURB AND NORMAL CURB.
4. IF 6" MIX 1 CONCRETE IS USED AS FOUNDATION FOR BRICK INLET, PLACE NO. 4 DEFORMED BARS AT 12" CC BOTH WAYS, 2" CLEAR FROM TOP.
5. COST OF FURNISHING AND PLACING 6" V.P. STUB WITH V.P. STOPPER TO BE INCLUDED IN THE PRICE BID PER LINEAR FOOT OF INLET.
6. DEPTH OF INLET CONNECTION IN STREETS AT CURB LINE TO BE 52" FROM INVERT TO ESTABLISHED CURB GRADE. DEPTH OF INLET CONNECTION IN ALLEYS TO BE 42" FROM INVERT TO ALLEY GRADE. NO DEVIATION FROM THESE DEPTHS WILL BE CONSIDERED FOR PAYMENT UNLESS DIRECTED BY THE ENGINEER IN WRITING.

			ISSUED	REVISED	REVISED
CITY OF BALTIMORE 1797	APPROVED: HEAD, BUREAU OF WATER AND WASTEWATER / DIRECTOR, DEPARTMENT OF PUBLIC WORKS	CITY OF BALTIMORE DEPARTMENT OF PUBLIC WORKS BUREAU OF WATER AND WASTEWATER	3/2008		
		TYPE 'E' INLET	DETAIL NO. BC 376.14		
			SCALE: NONE	SHEET 1 OF 1	

F.A.P. NO STP-3057 (4)N
SHA CONTRACT NO: BC320-001-815
BALTIMORE CITY CONTRACT NO. TR08310

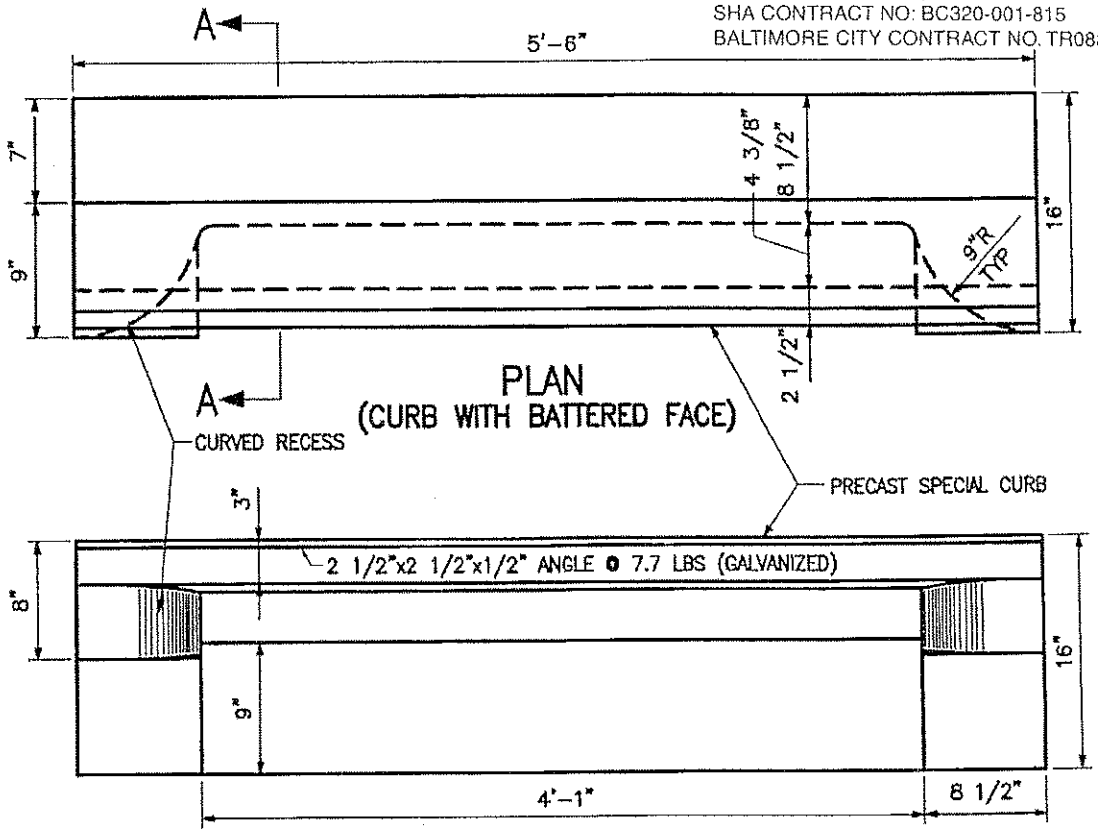

PLAN
(CURB WITH BATTERED FACE)

FRONT ELEVATION
(CURB WITH BATTERED FACE)

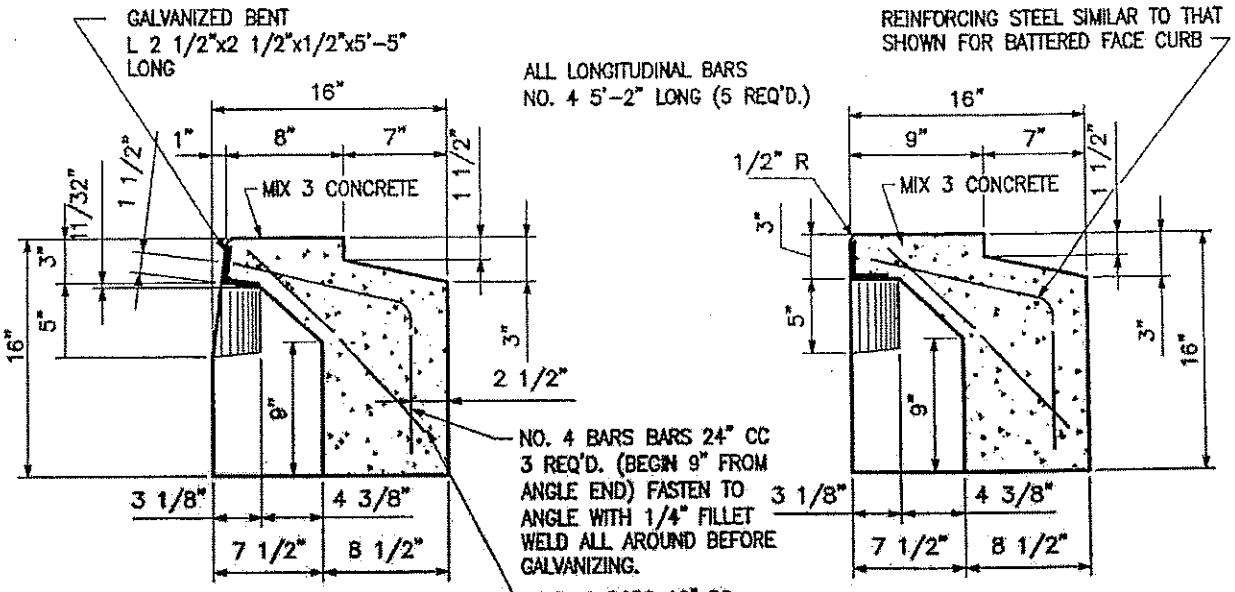

SECTION A–A
(BATTERED FACE)

SECTION A–A
(VERTICAL FACE)

APPROVED: HEAD, BUREAU OF WATER AND WASTEWATER / DIRECTOR, DEPARTMENT OF PUBLIC WORKS	CITY OF BALTIMORE DEPARTMENT OF PUBLIC WORKS BUREAU OF WATER AND WASTEWATER	ISSUED	REVISED	REVISED
		3/2008		
	PRECAST SPECIAL CURB FOR UNDEPRESSED 'E' COMBINATION INLET	DETAIL NO. BC 376.22		
		SCALE: NONE	SHEET 1 OF 2	

F.A.P. NO STP-3057 (4)N
SHA CONTRACT NO: BC320-001-815
BALTIMORE CITY CONTRACT NO. TR08310

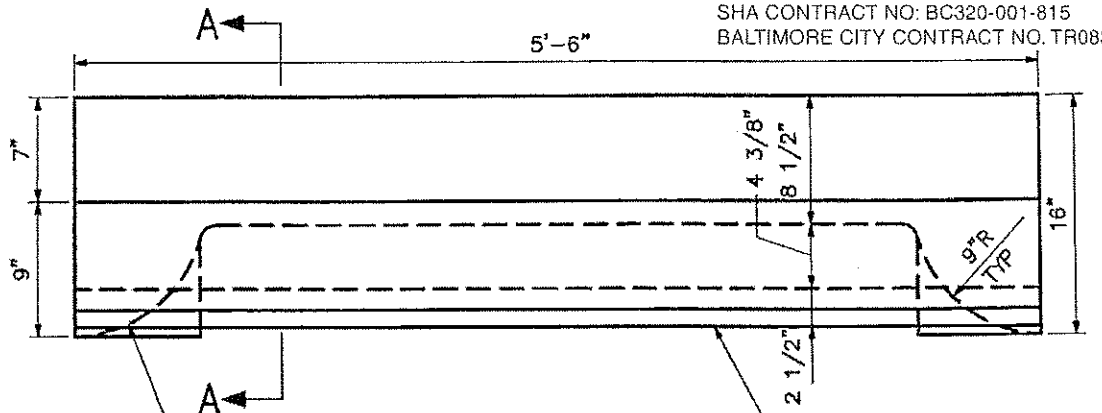

PLAN
(CURB WITH BATTERED FACE)

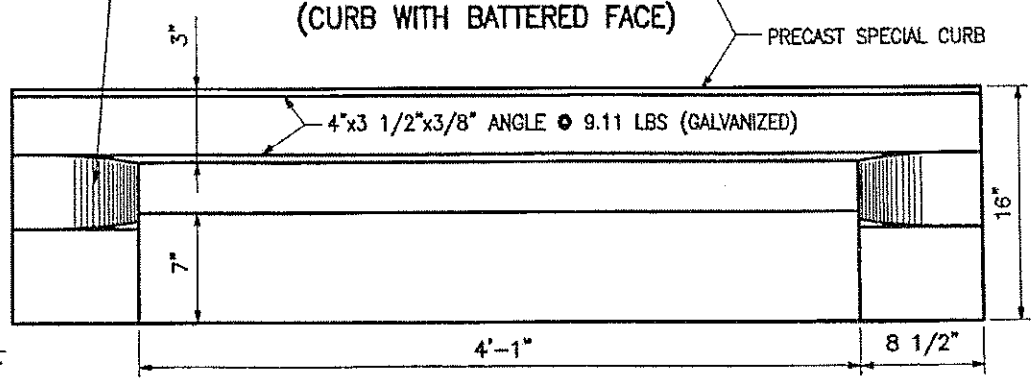

NOTE:

FOR METHOD OF DEPRESSING PAVING AT INLETS SEE BC 380.99

FRONT ELEVATION
(CURB WITH BATTERED FACE)

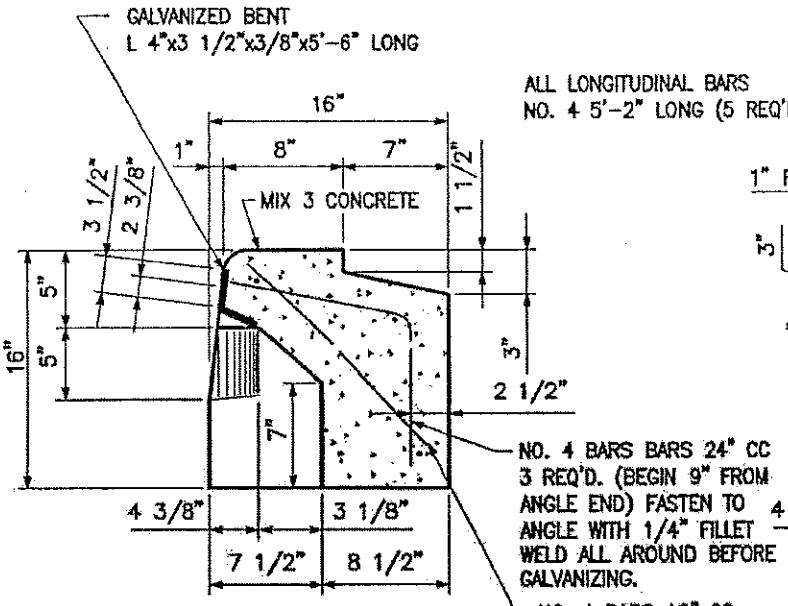

SECTION A–A
(BATTERED FACE)

ALL LONGITUDINAL BARS
NO. 4 5'-2" LONG (5 REQ'D.)

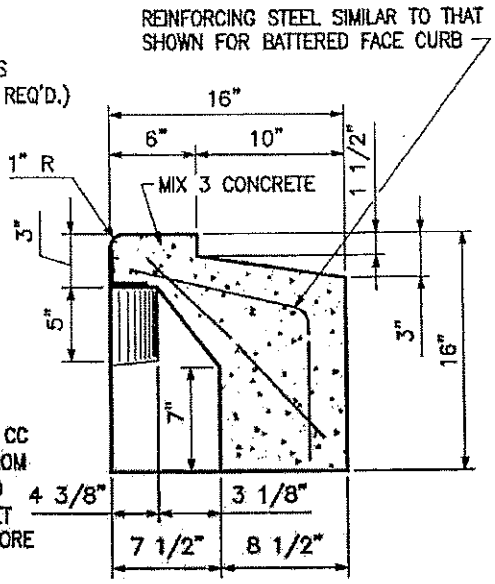

SECTION A–A
(VERTICAL FACE)

CITY OF BALTIMORE 1797	APPROVED: HEAD, BUREAU OF WATER AND WASTEWATER / DIRECTOR, DEPARTMENT OF PUBLIC WORKS	CITY OF BALTIMORE DEPARTMENT OF PUBLIC WORKS BUREAU OF WATER AND WASTEWATER	ISSUED: 3/2008	REVISED / REVISED
		PRECAST SPECIAL CURB FOR DEPRESSED 'E' COMBINATION INLET	DETAIL NO. BC 376.22	
			SCALE: NONE	SHEET 2 OF 2

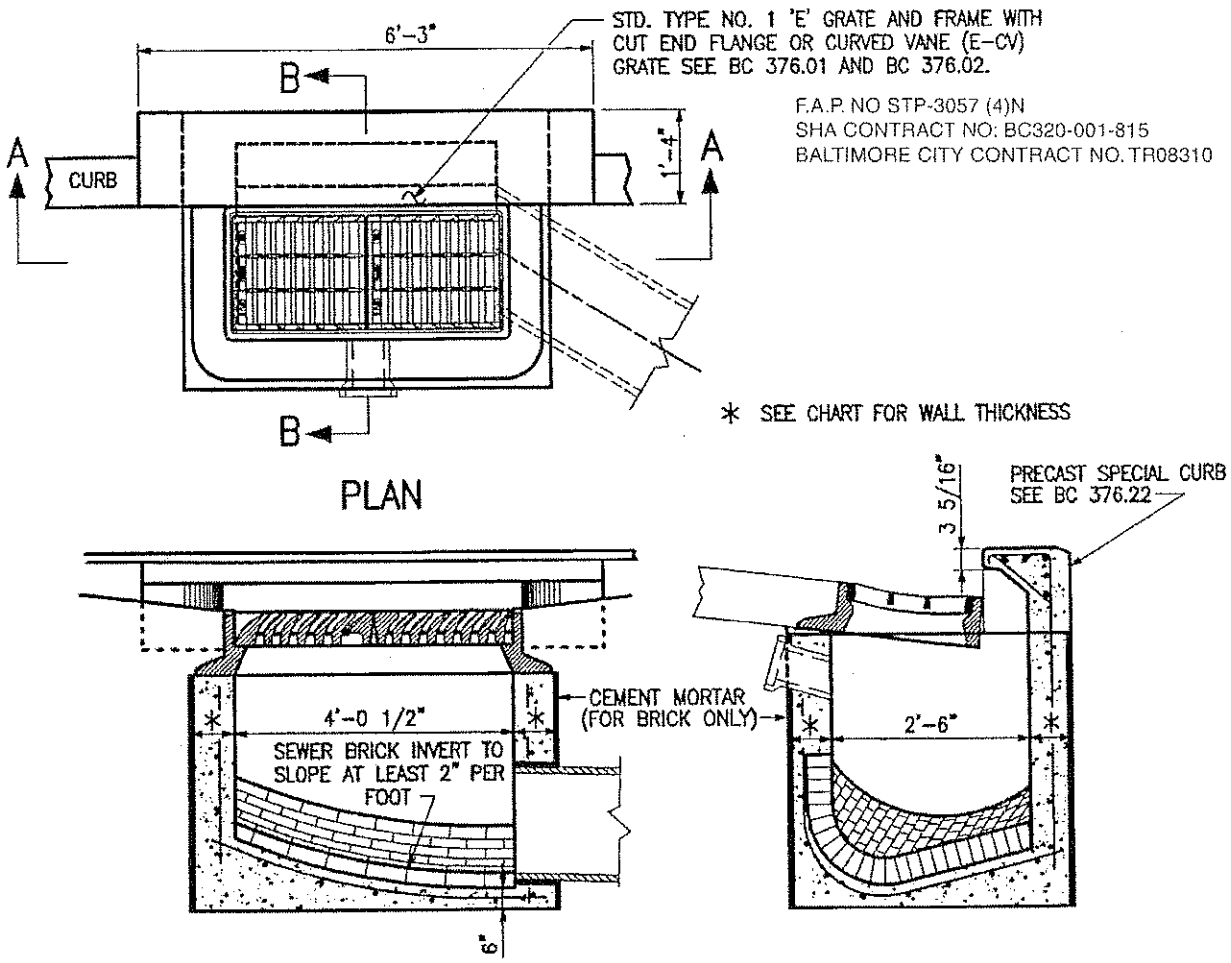

	PRECAST	CAST-IN-PLACE/BRICK
WALL THICKNESS	6" MIN	8 1/2 "
REINF	2 LAYERS- 4x4 W4.0 x W4.0- WWF	NO. 4 BARS @ 6" CC EW 2" COVER
CONCRETE	MIX 6	MIX 3
ALLOWABLE DEPTH	DPW APPROVAL REQUIRED OVER 15'	

NOTES:

1. INLET MAY BE CONSTRUCTED OF BRICK, CAST IN PLACE OR PRECAST MIX 3 CONCRETE WITH NO. 4 DEFORMED BARS AT 6" CC BOTH WAYS. 2" CLEAR FROM FACE OF INSIDE WALL. SEE LATEST DPW SPECIFICATIONS FOR INLETS.
2. TOP 4" OF PRECAST/CONCRETE WALLS MAY BE BRICK MASONRY TO BRING GRATE TO REQUIRED GRADE.
3. PLACE 1/4" EXPANSION MATERIAL BETWEEN FRAME AND ABUTTING RIGID PAVEMENT; AND BETWEEN ENDS OF INLET CURB AND NORMAL CURB.
4. IF 6" MIX 1 CONCRETE IS USED AS FOUNDATION FOR BRICK INLET, PLACE NO. 4 DEFORMED BARS AT 12" CC BOTH WAYS, 2" CLEAR FROM TOP.
5. COST OF FURNISHING AND PLACING 6" V.P. STUB WITH V.P. STOPPER TO BE INCLUDED IN THE PRICE BID PER LINEAR FOOT OF INLET.
6. DEPTH OF INLET CONNECTION IN STREETS AT CURB LINE TO BE 52" FROM INVERT TO ESTABLISHED CURB GRADE. DEPTH OF INLET CONNECTION IN ALLEYS TO BE 42" FROM INVERT TO ALLEY GRADE. NO DEVIATION FROM THESE DEPTHS WILL BE CONSIDERED FOR PAYMENT UNLESS DIRECTED BY THE ENGINEER IN WRITING.

			ISSUED	REVISED	REVISED
CITY OF BALTIMORE 1797	APPROVED: HEAD, BUREAU OF WATER AND WASTEWATER / DIRECTOR, DEPARTMENT OF PUBLIC WORKS	CITY OF BALTIMORE DEPARTMENT OF PUBLIC WORKS BUREAU OF WATER AND WASTEWATER	3 / 2008		
		TYPE 'E' COMBINATION INLET	DETAIL NO. BC 376.24		
			SCALE : NONE	SHEET 1 OF 1	

F.A.P. NO STP-3057 (4)N
SHA CONTRACT NO BC320-001-815
BALTIMORE CITY CONTRACT NO TR08310

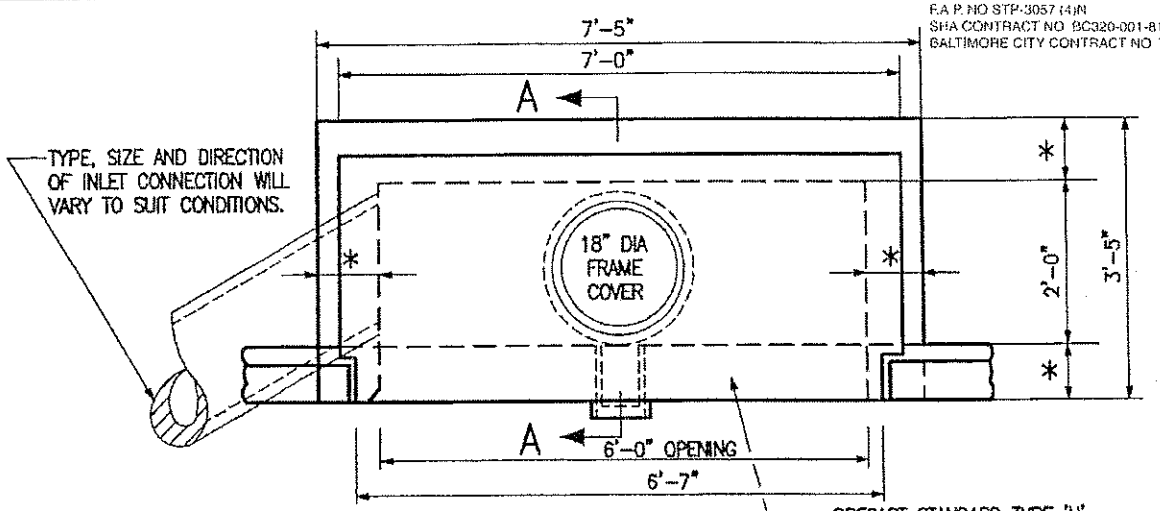

PLAN

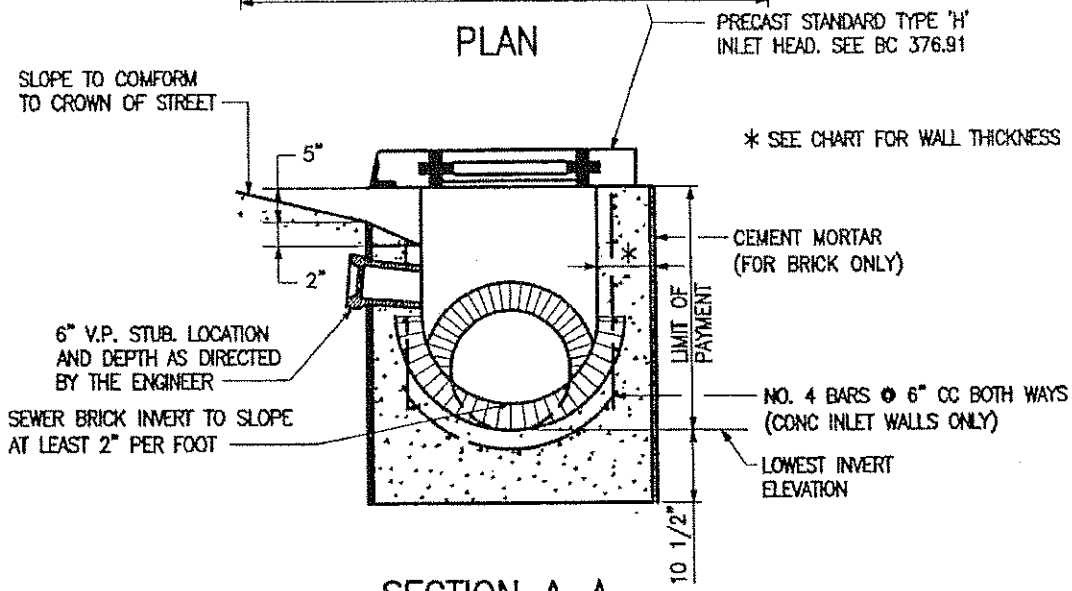

SECTION A-A

	PRECAST	CAST-IN-PLACE/BRICK
WALL THICKNESS	6" MIN	8 1/2 "
REINF	2 LAYERS- 4x4 W4.0 x W4.0- WWF	NO. 4 BARS @ 6" CC EW 2" COVER
CONCRETE	MIX 6	MIX 3
ALLOWABLE DEPTH	DPW APPROVAL REQUIRED OVER 15'	

NOTES:

1. INLET MAY BE CONSTRUCTED OF BRICK OR MIX 3 CONCRETE WITH NO. 4 DEFORMED BARS @ 6" CC BOTH WAYS. 2" CLEAR FROM FACE OF INSIDE WALL. SEE LATEST DPW SPEC FOR INLETS.
2. TOP 4" OF CONCRETE WALLS MAY BE BRICK MASONRY TO BRING GRATE TO REQUIRED GRADE.
3. PLACE 1/4" EXPANSION MATERIAL BETWEEN FRAME AND ABUTTING RIGID PAVEMENT; AND BETWEEN ENDS OF INLET CURB AND NORMAL CURB.
4. IF 6" MIX 1 CONCRETE IS USED AS FOUNDATION FOR BRICK INLET, PLACE NO. 4 DEFORMED BARS @ 12" CC BOTH WAYS. 2" CLEAR FROM TOP.
5. COST OF FURNISHING AND PLACING 6" V.P. STUB WITH V.P. STOPPER TO BE INCLUDED IN THE PRICE BID PER INLET.
6. DEPTH OF INLET CONNECTION IN STREETS AT CURB LINE TO BE 52" FROM INVERT TO ESTABLISHED CURB GRADE. NO DEVIATION FROM THIS DEPTH WILL BE CONSIDERED FOR PAYMENT UNLESS DIRECTED BY THE ENGINEER IN WRITING.

			ISSUED	REVISED	REVISED
CITY OF BALTIMORE 1797	APPROVED: HEAD, BUREAU OF WATER AND WASTEWATER / DIRECTOR, DEPARTMENT OF PUBLIC WORKS	CITY OF BALTIMORE DEPARTMENT OF PUBLIC WORKS BUREAU OF WATER AND WASTEWATER	3 / 2008		
		TYPE 'H' INLET	DETAIL NO. BC 376.54		
			SCALE: NONE	SHEET 1 OF 1	

F.A.P. NO STP-3057 (4)N
SHA CONTRACT NO: BC320-001-815
BALTIMORE CITY CONTRACT NO. TR08310

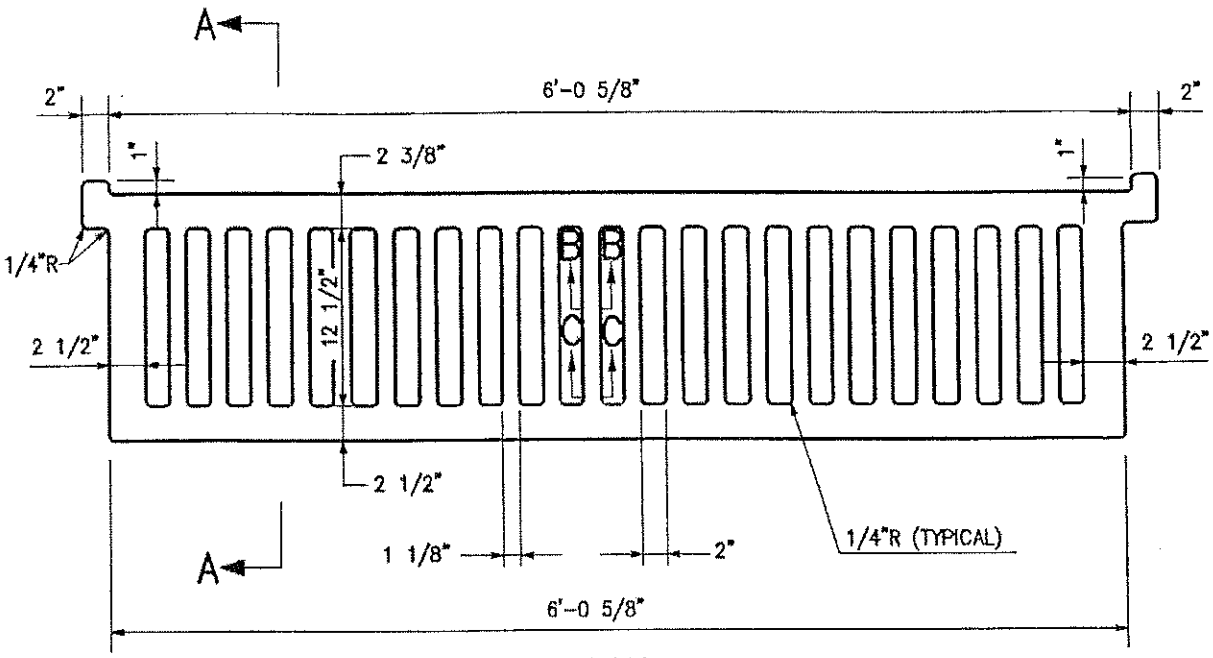

PLAN

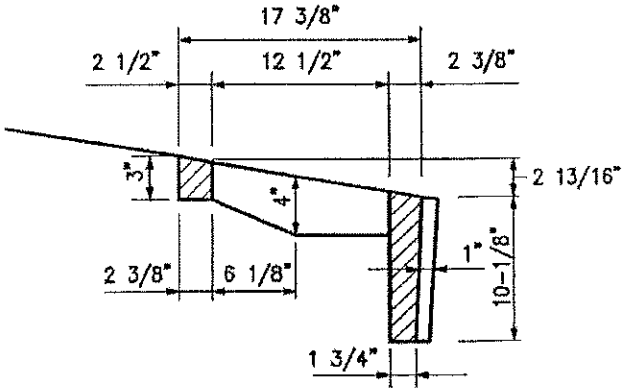

SECTION A–A

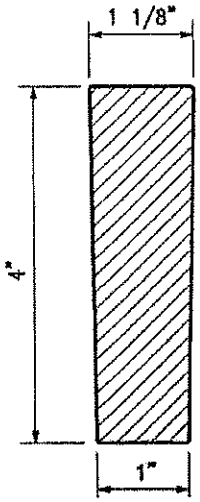

SECTION B–B
HALF SIZE

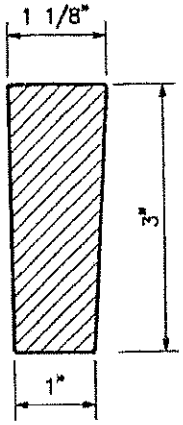

SECTION C–C
HALF SIZE

CITY OF BALTIMORE 1797	APPROVED: HEAD, BUREAU OF WATER AND WASTEWATER; DIRECTOR, DEPARTMENT OF PUBLIC WORKS	CITY OF BALTIMORE DEPARTMENT OF PUBLIC WORKS BUREAU OF WATER AND WASTEWATER	ISSUED	REVISED	REVISED
			3 / 2008		
		TYPE NO. 2 'H' GRATE	DETAIL NO. BC 376.62		
			SCALE: NONE	SHEET 1 OF 1	

F.A.P. NO STP-3057 (4)N
SHA CONTRACT NO. BC320-001-815
BALTIMORE CITY CONTRACT NO TR08310

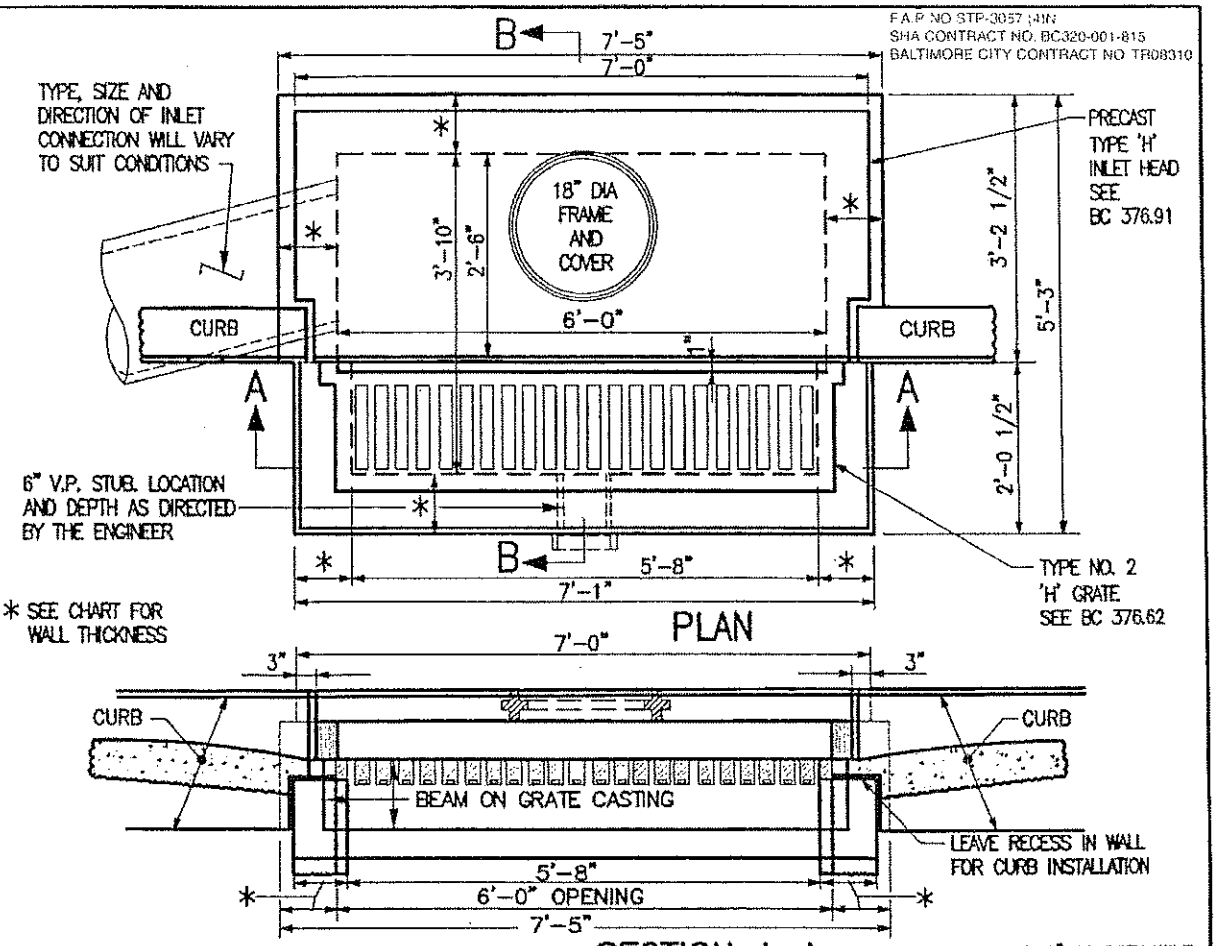

	PRECAST	CAST-IN-PLACE/BRICK
WALL THICKNESS	6" MIN	8 1/2"
REINF	2 LAYERS– 4x4 W4.0 x W4.0– WWF	NO. 4 BARS @ 6" CC EW 2" COVER
CONCRETE	MIX 6	MIX 3
ALLOWABLE DEPTH	DPW APPROVAL REQUIRED OVER 15'	

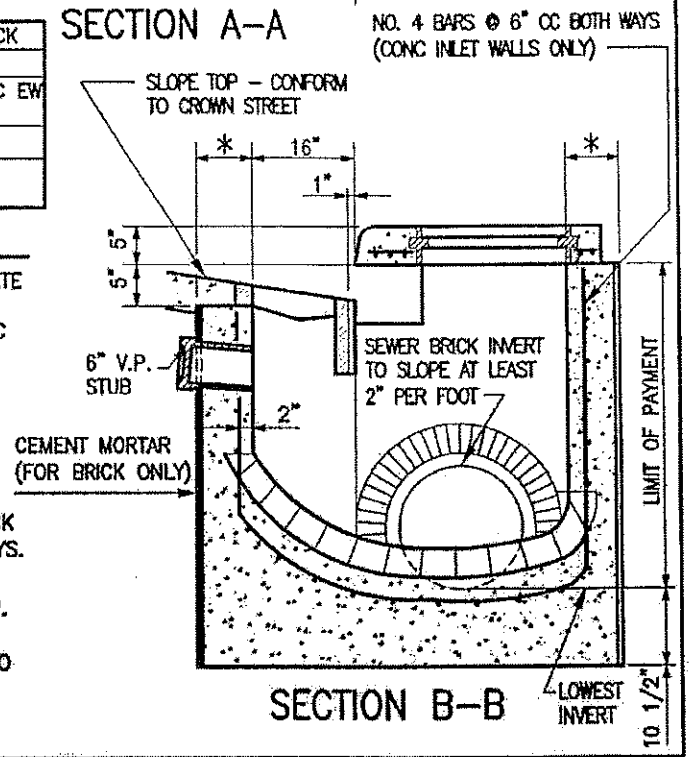

NOTES:

1. INLET MAY BE CONSTRUCTED OF BRICK OR MIX 3 CONCRETE WITH NO. 4 DEFORMED BARS @ 6" CC BOTH WAYS. 2" CLEAR FROM FACE OF INSIDE WALL. SEE LATEST DPW SPEC FOR INLETS.
2. TOP 4" OF CONCRETE WALLS MAY BE BRICK MASONRY TO BRING GRATE TO REQUIRED GRADE.
3. PLACE 1/4" EXPANSION MATERIAL BETWEEN FRAME AND ABUTTING RIGID PAVEMENT; AND BETWEEN ENDS OF INLET CURB AND NORMAL CURB.
4. IF 6" MIX 1 CONCRETE IS USED AS FOUNDATION FOR BRICK INLET, PLACE NO. 4 DEFORMED BARS @ 12" CC BOTH WAYS. 2" CLEAR FROM TOP.
5. COST OF FURNISHING AND PLACING 6" V.P. STUB WITH V.P. STOPPER TO BE INCLUDED IN THE PRICE BID PER INLET.
6. DEPTH OF INLET CONNECTION IN STREETS AT CURB LINE TO BE 52" FROM INVERT TO ESTABLISHED CURB GRADE. NO DEVIATION FROM THIS DEPTH WILL BE CONSIDERED FOR PAYMENT UNLESS DIRECTED BY THE ENGINEER IN WRITING.

APPROVED:
HEAD, BUREAU OF WATER AND WASTEWATER
DIRECTOR, DEPARTMENT OF PUBLIC WORKS

CITY OF BALTIMORE
DEPARTMENT OF PUBLIC WORKS
BUREAU OF WATER AND WASTEWATER

TYPE 'H'
COMBINATION INLET

ISSUED	REVISED	REVISED
3 / 2008		

DETAIL NO.
BC 376.64

SCALE : NONE | SHEET 1 OF 1

F.A.P. NO STP-3057 (4)N
SHA CONTRACT NO: BC320-001-815
BALTIMORE CITY CONTRACT NO. TR08310

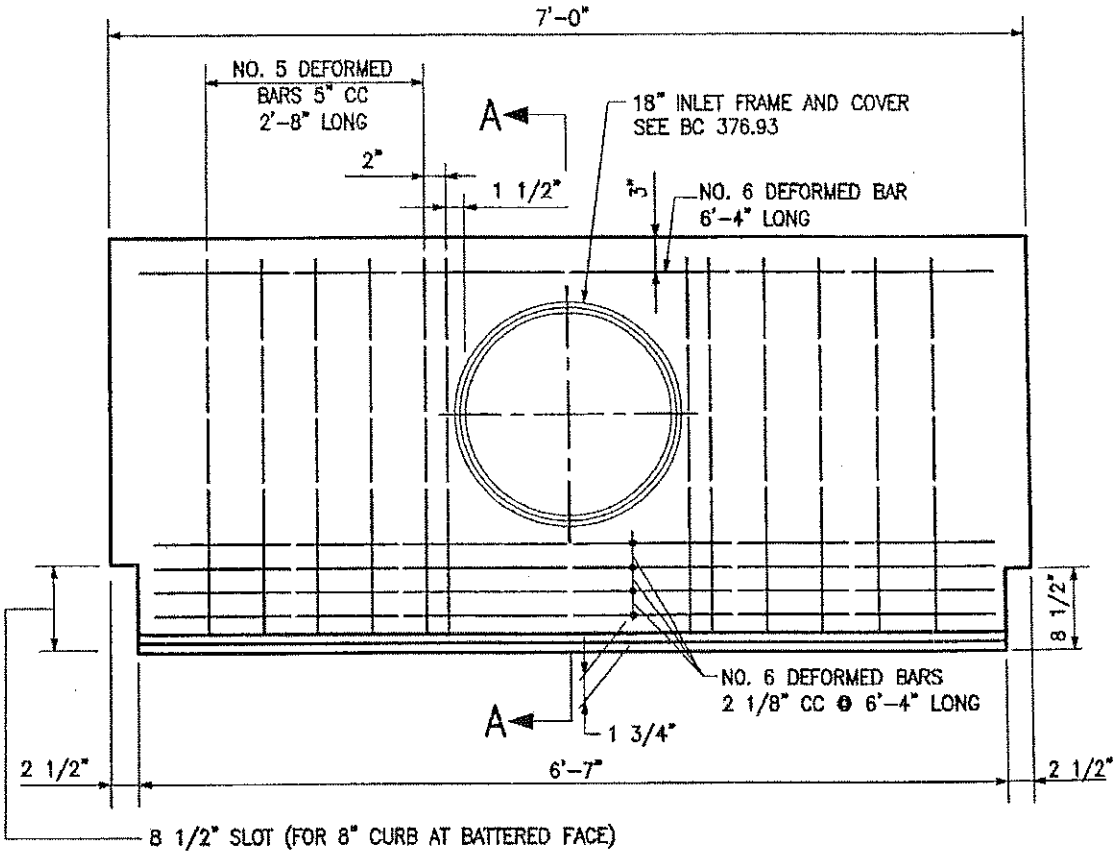

PLAN

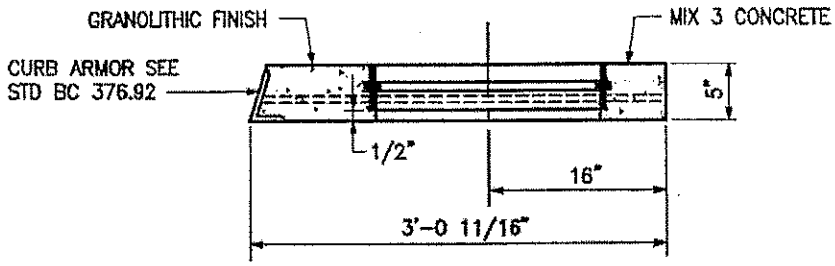

SECTION A–A

CITY OF BALTIMORE 1797	APPROVED: HEAD, BUREAU OF WATER AND WASTEWATER / DIRECTOR, DEPARTMENT OF PUBLIC WORKS	CITY OF BALTIMORE DEPARTMENT OF PUBLIC WORKS BUREAU OF WATER AND WASTEWATER	ISSUED	REVISED	REVISED
			3 / 2008		
		PRECAST TYPE 'H' INLET HEAD	DETAIL NO. BC 376.91		
			SCALE: NONE	SHEET 1 OF 1	

F.A.P. NO STP-3057 (4)N
SHA CONTRACT NO: BC320-001-815
BALTIMORE CITY CONTRACT NO. TR08310

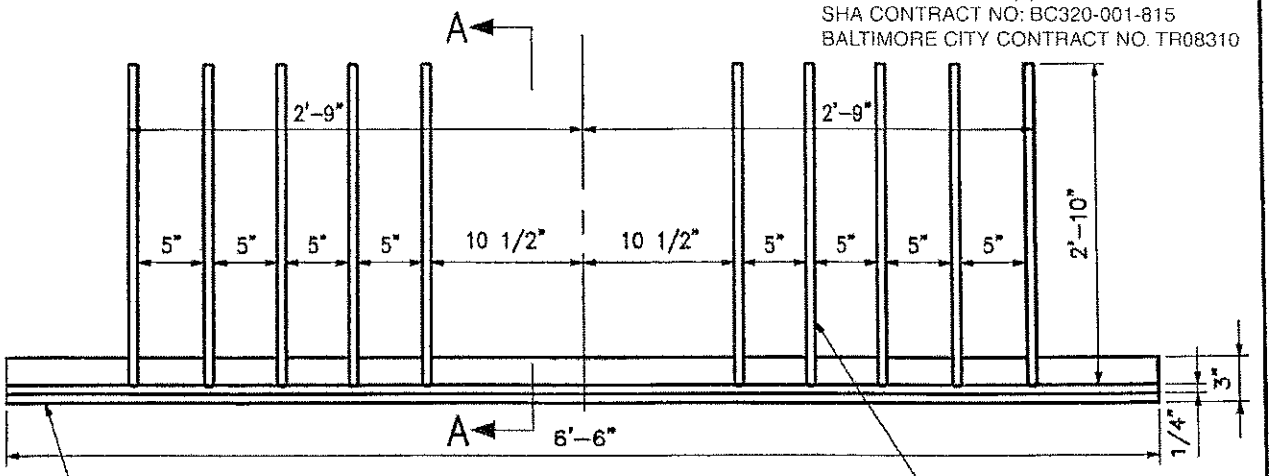

PLAN
SCALE: 1" = 1'-0"

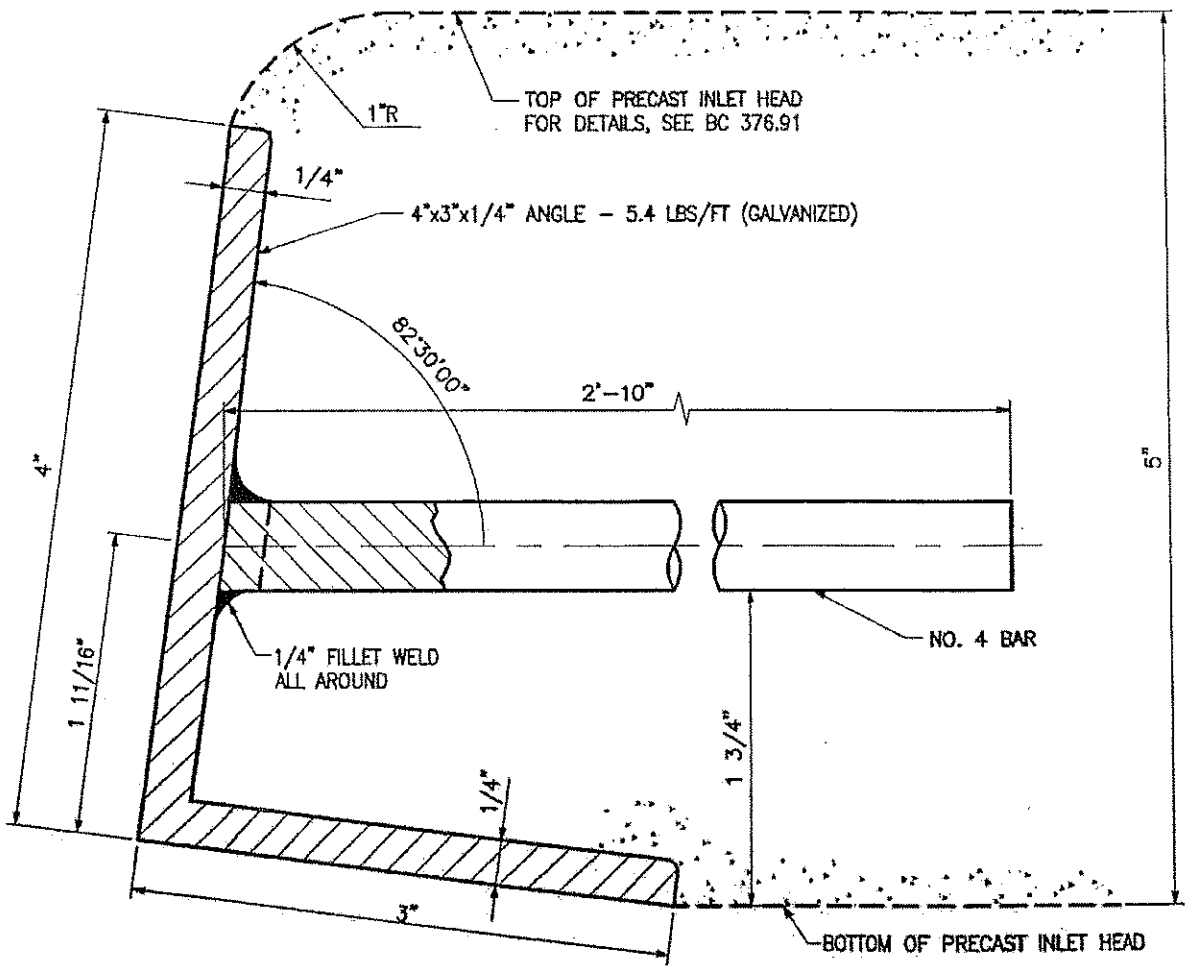

SECTION A-A
SCALE: FULL SIZE

CITY OF BALTIMORE 1797	APPROVED: HEAD, BUREAU OF WATER AND WASTEWATER / DIRECTOR, DEPARTMENT OF PUBLIC WORKS	CITY OF BALTIMORE DEPARTMENT OF PUBLIC WORKS BUREAU OF WATER AND WASTEWATER	ISSUED	REVISED	REVISED
			3 / 2008		
		CURB ARMOR FOR TYPE "H" INLET HEAD	DETAIL NO. BC 376.92		
			SCALE: NONE	SHEET 1 OF 1	

F.A.P. NO STP-3057 (4)N
SHA CONTRACT NO: BC320-001-815
BALTIMORE CITY CONTRACT NO. TR08310

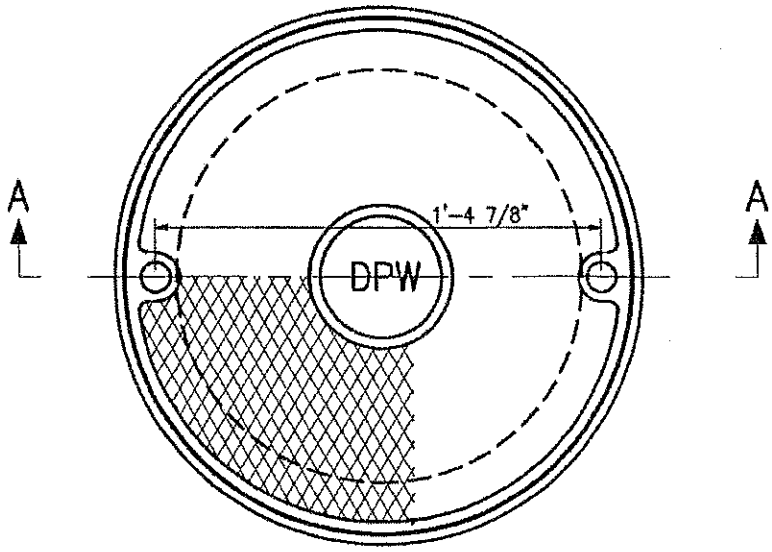

PLAN

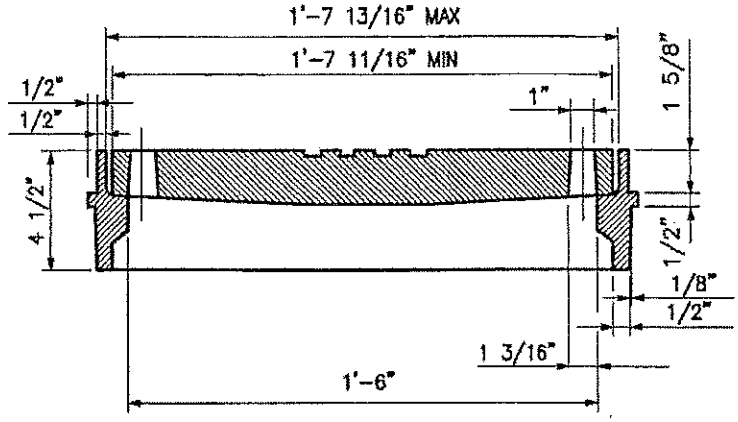

SECTION A-A

CITY OF BALTIMORE 1797	APPROVED: HEAD, BUREAU OF WATER AND WASTEWATER; DIRECTOR, DEPARTMENT OF PUBLIC WORKS	CITY OF BALTIMORE DEPARTMENT OF PUBLIC WORKS BUREAU OF WATER AND WASTEWATER	ISSUED	REVISED	REVISED
			3 / 2008		
		18 IN. INLET FRAME AND COVER	DETAIL NO. BC 376.93		
			SCALE: NONE	SHEET 1 OF 1	

F.A.P. NO STP-3057 (4)N
SHA CONTRACT NO: BC320-001-815
BALTIMORE CITY CONTRACT NO. TR08310

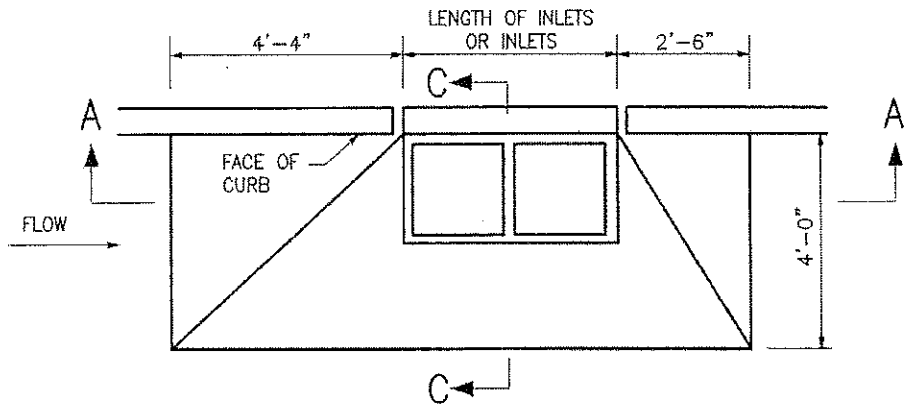

PLAN

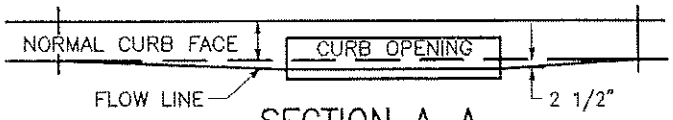

SECTION A–A
FLOW INTERCEPT (ON GRADE)

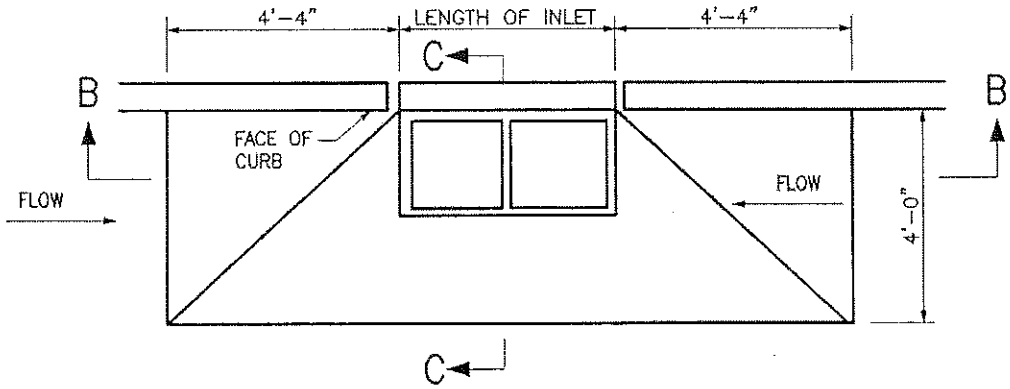

PLAN

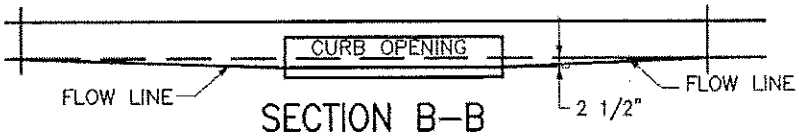

SECTION B–B

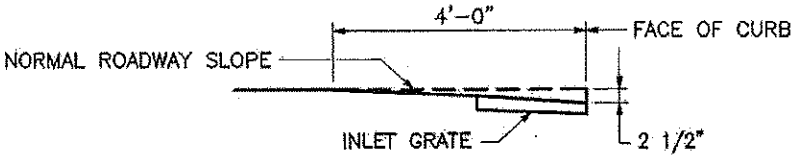

SECTION C–C
FLOW IN SUMP

	APPROVED: HEAD, BUREAU OF WATER AND WASTEWATER DIRECTOR, DEPARTMENT OF PUBLIC WORKS	CITY OF BALTIMORE DEPARTMENT OF PUBLIC WORKS BUREAU OF WATER AND WASTEWATER	ISSUED	REVISED	REVISED
			3 / 2008		
		METHOD OF DEPRESSING PAVING AT INLETS	DETAIL NO. BC 380.99		
			SCALE: NONE	SHEET 1 OF 1	

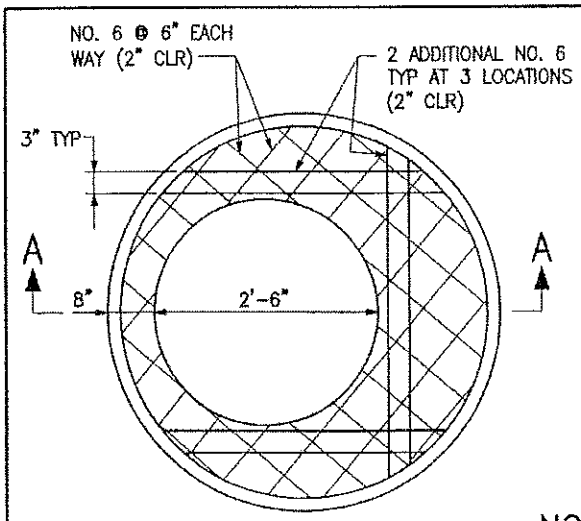

OPTIONAL FLAT SLAB TOP

(SHOWN WITHOUT MANHOLE FRAME AND CLOVER – SEE NOTE 9)

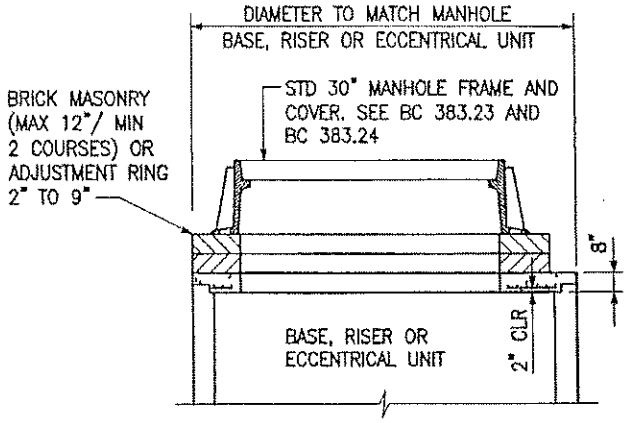

SECTION A–A

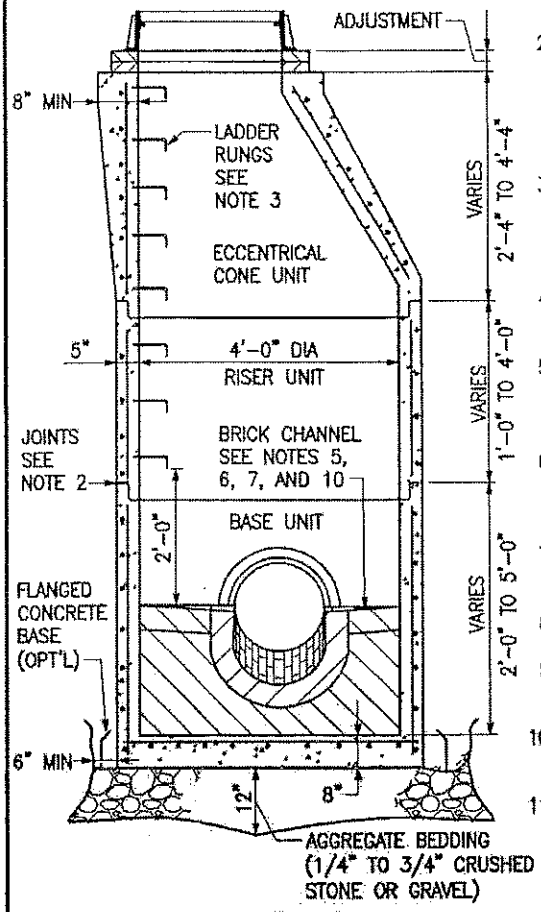

SECTION

NOTES:

1. MANHOLE DESIGN SPECIFICATIONS SHALL CONFORM TO "PRECAST REINFORCED CONCRETE MANHOLE SECTION ASTM DESIGNATION C–478, LATEST REVISIONS".
2. MANHOLE SECTIONS MANUFACTURED ACCORDING TO ASTM C–478 AND AASHTO M199. THE JOINTS SHALL BE SEALED BY THE CONTRACTOR AND MADE WATER TIGHT USING 'O' RING RUBBER GASKETS AND PROFILE JOINTS MEETING ASTM C–443 AND C–361. FLEXIBLE PLASTIC GASKET TO MEET AASHTO M198 TYPE B.
3. LADDER RUNGS SHALL BE INSTALLED IN STAGGERED ALIGNMENT AT 1'–3" TYPICAL CC. RUNG TYPE SHALL BE IN ACCORDANCE WITH STANDARD BC 383.92 OR 383.93. LADDER RUNGS SHALL BE INCIDENTAL TO THE COST OF THE MANHOLE.
4. LIFT EYES OR LIFT INSERTS SHALL BE PROVIDED IN EACH SECTION FOR HANDLING.
5. BENCH AND CHANNEL TO BE CONSTRUCTED OF ONE COURSE OF SEWER BRICK ON EDGE. BENCH TO SLOPE A MINIMUM OF 1" PER FOOT TOWARDS CHANNEL.
6. BENCH HEIGHT ABOVE OUTGOING PIPE INVERT TO BE EQUAL TO ONE HALF DIAMETER OF THE OUTGOING PIPE OR AS DIRECTED BY THE ENGINEER.
7. CHANNEL TO THE SLOPE 1/4 INCH PER FOOT TOWARDS OUTLET OR AS DIRECTED BY THE ENGINEER.
8. USE NON–SHRINK GROUT JOINT FILLER.
9. USE FLAT SLAB TOP WHEN MANHOLE LENGTH IS NOT SUFFICIENT FOR ECCENTRICAL CONE UNIT.
10. VERTICAL MEASUREMENT FOR PAYMENT SHALL BE FROM THE INVERT OF THE OUTGOING PIPE TO THE BOTTOM OF THE MANHOLE FRAME.
11. MATERIAL PROPERTIES: CONCRETE SHALL BE MIX 6, WWF PER ASTM A135, REBAR PER ASTM A615 GRADE 60.

CITY OF BALTIMORE 1797	APPROVED: HEAD, BUREAU OF WATER AND WASTEWATER	CITY OF BALTIMORE DEPARTMENT OF PUBLIC WORKS BUREAU OF WATER AND WASTEWATER	ISSUED	REVISED	REVISED
	DIRECTOR, DEPARTMENT OF PUBLIC WORKS		3 / 2008		
		48" DIA PRECAST STORM MANHOLE FOR 15" TO 24" PIPES	DETAIL NO. BC 383.04		
			SCALE : NONE	SHEET 1 OF 1	

F.A.P. NO STP-3057 (4)N
SHA CONTRACT NO: BC320-001-815
BALTIMORE CITY CONTRACT NO. TR08310

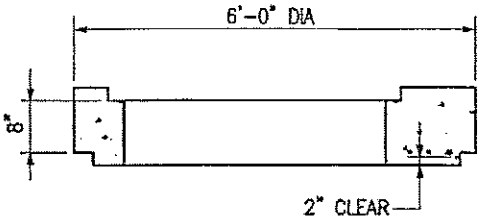

SECTION A-A

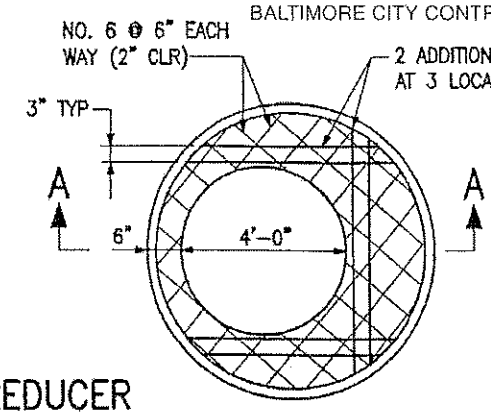

PLAN

FLATTOP REDUCER

* ADJUSTMENT – SEE SECTION A-A ON BC 383.04

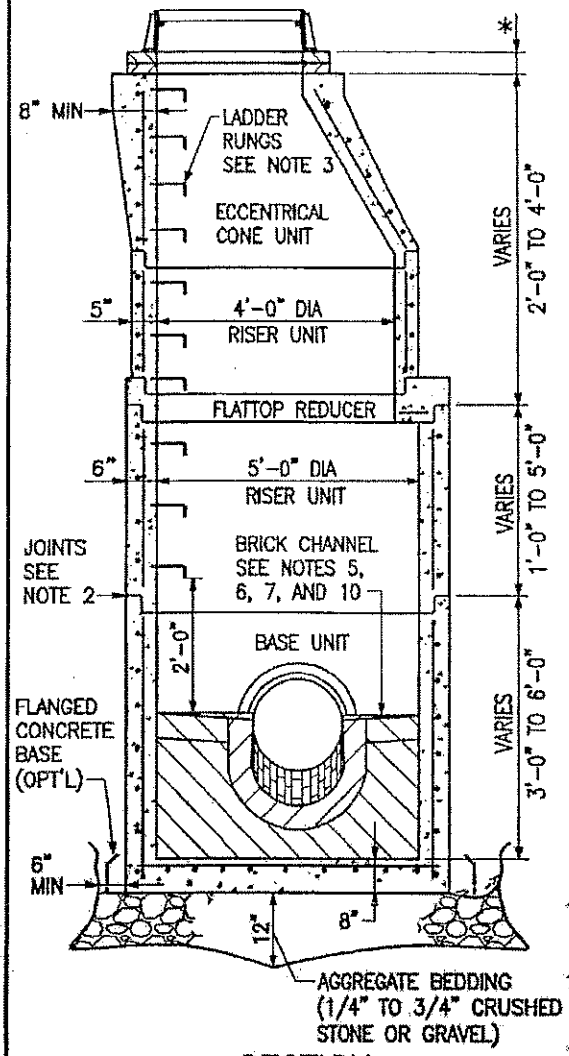

SECTION

NOTES:

1. MANHOLE DESIGN SPECIFICATIONS SHALL CONFORM TO "PRECAST REINFORCED CONCRETE MANHOLE SECTION ASTM DESIGNATION C-478, LATEST REVISIONS".
2. MANHOLE SECTIONS MANUFACTURED ACCORDING TO ASTM C-478 AND AASHTO M199. THE JOINTS SHALL BE SEALED BY THE CONTRACTOR AND MADE WATER TIGHT USING "O" RING RUBBER GASKETS AND PROFILE JOINTS MEETING ASTM C-443 AND C-361. FLEXIBLE PLASTIC GASKET TO MEET AASHTO M198 TYPE B.
3. LADDER RUNGS SHALL BE INSTALLED IN STAGGERED ALIGNMENT AT 1'-3" TYPICAL CC. RUNG TYPE SHALL BE IN ACCORDANCE WITH STANDARD BC 383.92 OR 383.93. LADDER RUNGS SHALL BE INCIDENTAL TO THE COST OF THE MANHOLE.
4. LIFT EYES OR LIFT INSERTS SHALL BE PROVIDED IN EACH SECTION FOR HANDLING.
5. BENCH AND CHANNEL TO BE CONSTRUCTED OF ONE COURSE OF SEWER BRICK ON EDGE. BENCH TO SLOPE A MINIMUM OF 1" PER FOOT TOWARDS CHANNEL.
6. BENCH HEIGHT ABOVE OUTGOING PIPE INVERT TO BE EQUAL TO ONE HALF DIAMETER OF THE OUTGOING PIPE OR AS DIRECTED BY THE ENGINEER.
7. CHANNEL TO THE SLOPE 1/4 INCH PER FOOT TOWARDS OUTLET OR AS DIRECTED BY THE ENGINEER.
8. USE NON-SHRINK GROUT JOINT FILLER.
9. USE FLAT SLAB TOP WHEN MANHOLE LENGTH IS NOT SUFFICIENT FOR ECCENTRICAL CONE UNIT.
10. VERTICAL MEASUREMENT FOR PAYMENT SHALL BE FROM THE INVERT OF THE OUTGOING PIPE TO THE BOTTOM OF THE MANHOLE FRAME.
11. MATERIAL PROPERTIES: CONCRETE SHALL BE MIX 6, WWF PER ASTM A135, REBAR PER ASTM A615 GRADE 60.
12. FLATTOP REDUCER REINFORCEMENT TO CONSIST OF REBAR SPACING AS SHOWN OR TWO CONTINUOUS CAGES WITH ONE WIRE PER CAGE INSIDE AND OUTSIDE WIRE AREA 0.12 PER ASTM A185.

CITY OF BALTIMORE 1797	APPROVED: HEAD, BUREAU OF WATER AND WASTEWATER; DIRECTOR, DEPARTMENT OF PUBLIC WORKS	CITY OF BALTIMORE DEPARTMENT OF PUBLIC WORKS BUREAU OF WATER AND WASTEWATER	ISSUED	REVISED	REVISED
			3 / 2008		
		60" DIA PRECAST STORM MANHOLE FOR 27" TO 36" PIPES	DETAIL NO. BC 383.05		
			SCALE: NONE	SHEET 1 OF 1	

F.A.P. NO STP-3057 (4)N
SHA CONTRACT NO: BC320-001-815
BALTIMORE CITY CONTRACT NO. TR08310

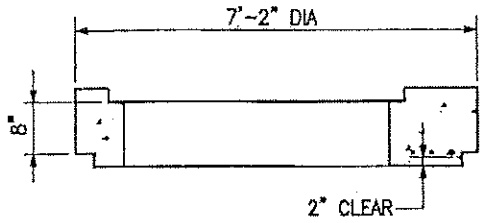

SECTION A–A

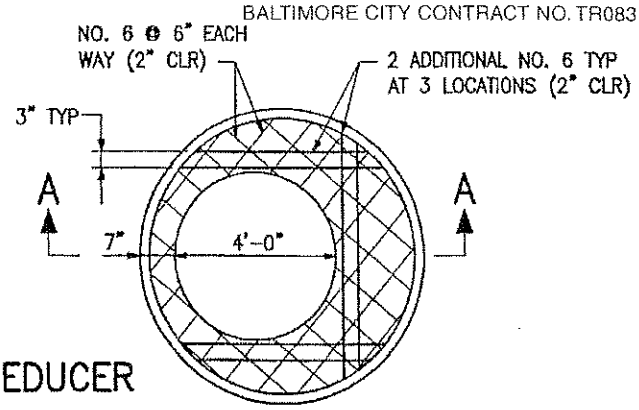

FLATTOP REDUCER

PLAN

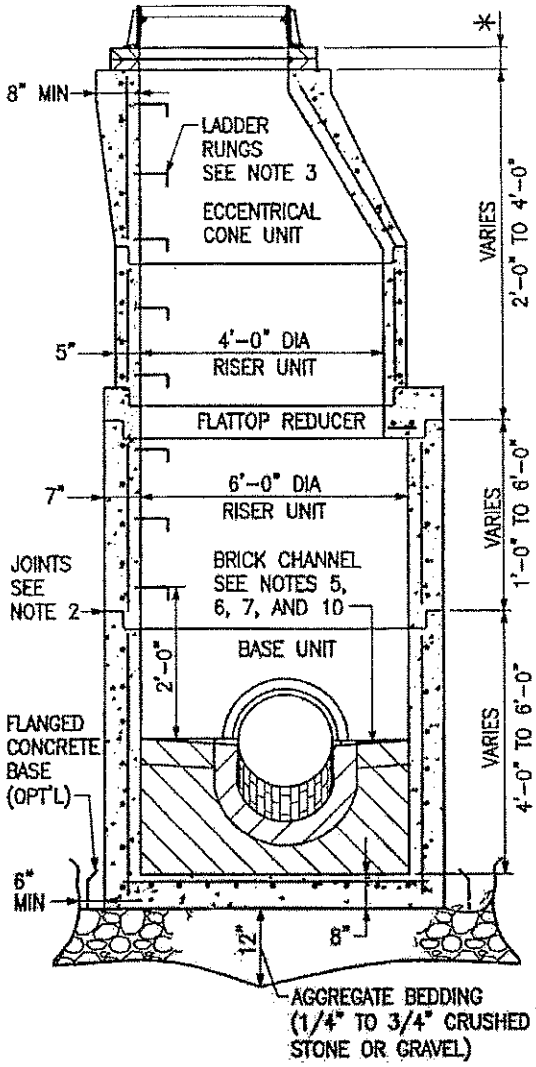

SECTION

NOTES:

1. MANHOLE DESIGN SPECIFICATIONS SHALL CONFORM TO "PRECAST REINFORCED CONCRETE MANHOLE SECTION ASTM DESIGNATION C–478, LATEST REVISIONS".
2. MANHOLE SECTIONS MANUFACTURED ACCORDING TO ASTM C–478 AND AASHTO M199. THE JOINTS SHALL BE SEALED BY THE CONTRACTOR AND MADE WATER TIGHT USING 'O' RING RUBBER GASKETS AND PROFILE JOINTS MEETING ASTM C–443 AND C–361. FLEXIBLE PLASTIC GASKET TO MEET AASHTO M198 TYPE B.
3. LADDER RUNGS SHALL BE INSTALLED IN STAGGERED ALIGNMENT AT 1'–3" TYPICAL CC. RUNG TYPE SHALL BE IN ACCORDANCE WITH STANDARD BC 383.92 OR 383.93. LADDER RUNGS SHALL BE INCIDENTAL TO THE COST OF THE MANHOLE.
4. LIFT EYES OR LIFT INSERTS SHALL BE PROVIDED IN EACH SECTION FOR HANDLING.
5. BENCH AND CHANNEL TO BE CONSTRUCTED OF ONE COURSE OF SEWER BRICK ON EDGE. BENCH TO SLOPE A MINIMUM OF 1" PER FOOT TOWARDS CHANNEL.
6. BENCH HEIGHT ABOVE OUTGOING PIPE INVERT TO BE EQUAL TO ONE HALF DIAMETER OF THE OUTGOING PIPE OR AS DIRECTED BY THE ENGINEER.
7. CHANNEL TO THE SLOPE 1/4 INCH PER FOOT TOWARDS OUTLET OR AS DIRECTED BY THE ENGINEER.
8. USE NON–SHRINK GROUT JOINT FILLER.
9. USE FLAT SLAB TOP WHEN MANHOLE LENGTH IS NOT SUFFICIENT FOR ECCENTRICAL CONE UNIT.
10. VERTICAL MEASUREMENT FOR PAYMENT SHALL BE FROM THE INVERT OF THE OUTGOING PIPE TO THE BOTTOM OF THE MANHOLE FRAME.
11. MATERIAL PROPERTIES: CONCRETE SHALL BE MIX 6, WWF PER ASTM A135, REBAR PER ASTM A615 GRADE 60.
12. FLATTOP REDUCER REINFORCEMENT TO CONSIST OF REBAR SPACING AS SHOWN OR TWO CONTINUOUS CAGES WITH ONE WIRE PER CAGE INSIDE AND OUTSIDE WIRE AREA 0.12 PER ASTM A185.

CITY OF BALTIMORE 1797	APPROVED: HEAD, BUREAU OF WATER AND WASTEWATER / DIRECTOR, DEPARTMENT OF PUBLIC WORKS	CITY OF BALTIMORE DEPARTMENT OF PUBLIC WORKS BUREAU OF WATER AND WASTEWATER	ISSUED	REVISED	REVISED
			3 / 2008		
		72" DIA PRECAST STORM MANHOLE FOR 42" TO 48" PIPES	DETAIL NO. BC 383.06		
			SCALE: NONE	SHEET 1 OF 1	

F.A.P. NO STP-3057 (4)N
SHA CONTRACT NO: BC320-001-815
BALTIMORE CITY CONTRACT NO. TR08310

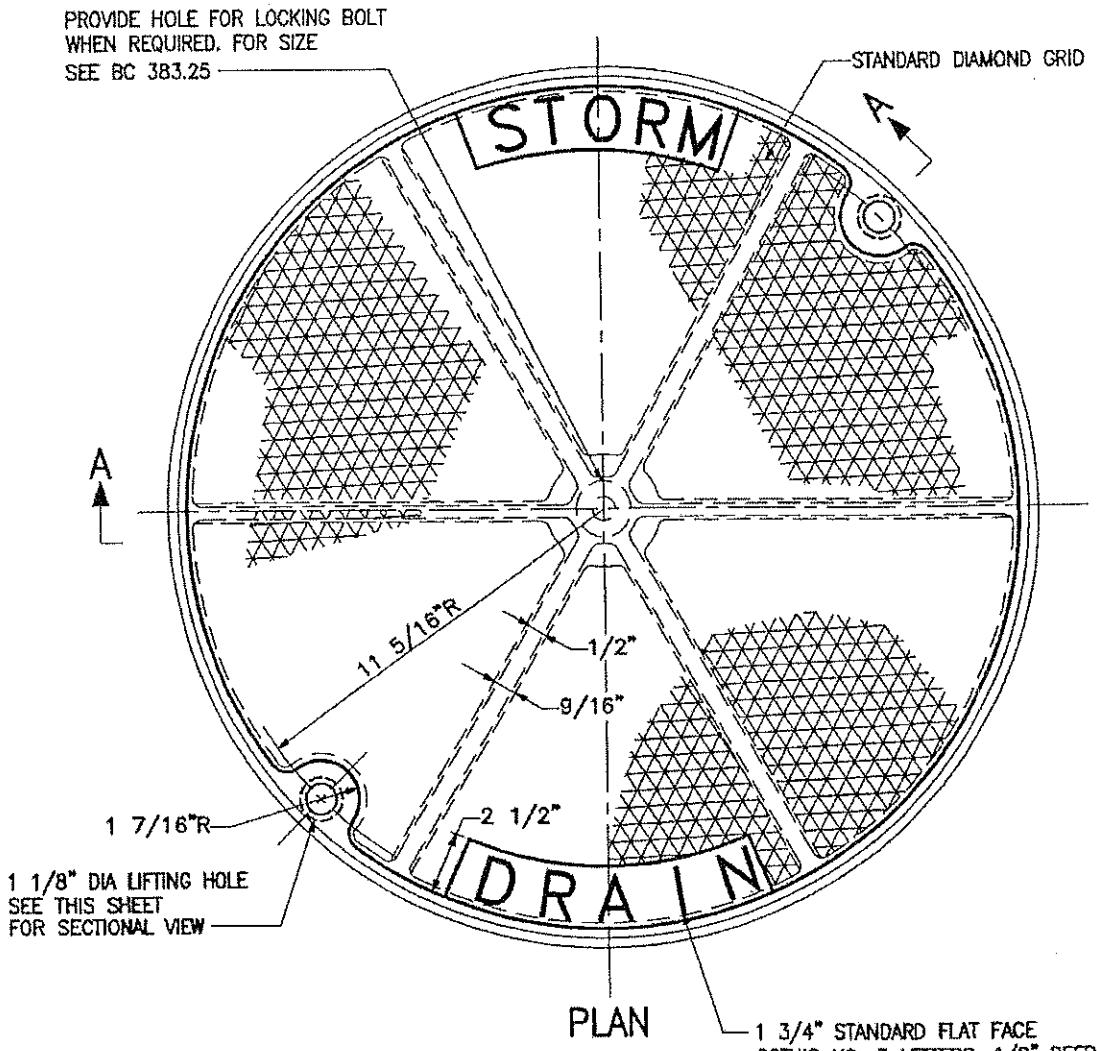

PLAN

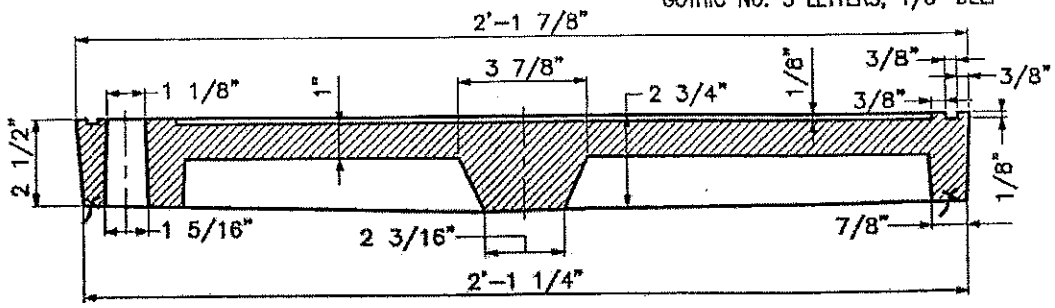

SECTION A–A

NOTES:

1. FOR STD 24" MANHOLE FRAME SEE BC 383.22
2. MATERIAL SHALL BE CAST GRAY IRON ASTM A–48, CLASS 35B
3. COVER SHALL MEET OR EXCEED AASHTO M 306 PROOF LOAD REQUIREMENTS.

CITY OF BALTIMORE 1797	APPROVED: HEAD, BUREAU OF WATER AND WASTEWATER / DIRECTOR, DEPARTMENT OF PUBLIC WORKS	CITY OF BALTIMORE DEPARTMENT OF PUBLIC WORKS BUREAU OF WATER AND WASTEWATER	ISSUED	REVISED	REVISED
			3 / 2008		
		STANDARD 24 IN. MANHOLE COVER	DETAIL NO. BC 383.21		
			SCALE: NONE	SHEET 1 OF 1	

F.A.P. NO STP-3057 (4)N
SHA CONTRACT NO: BC320-001-815
BALTIMORE CITY CONTRACT NO. TR08310

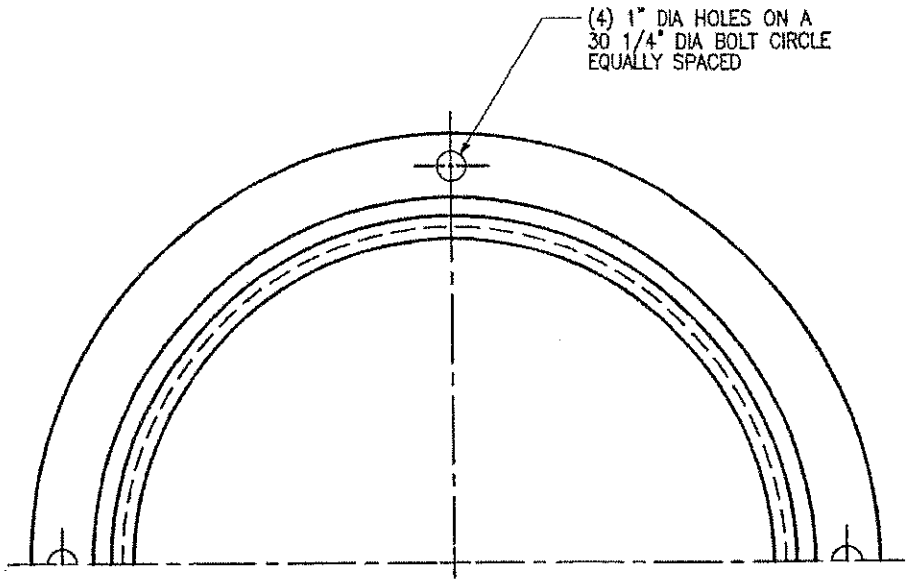

PARTIAL PLAN

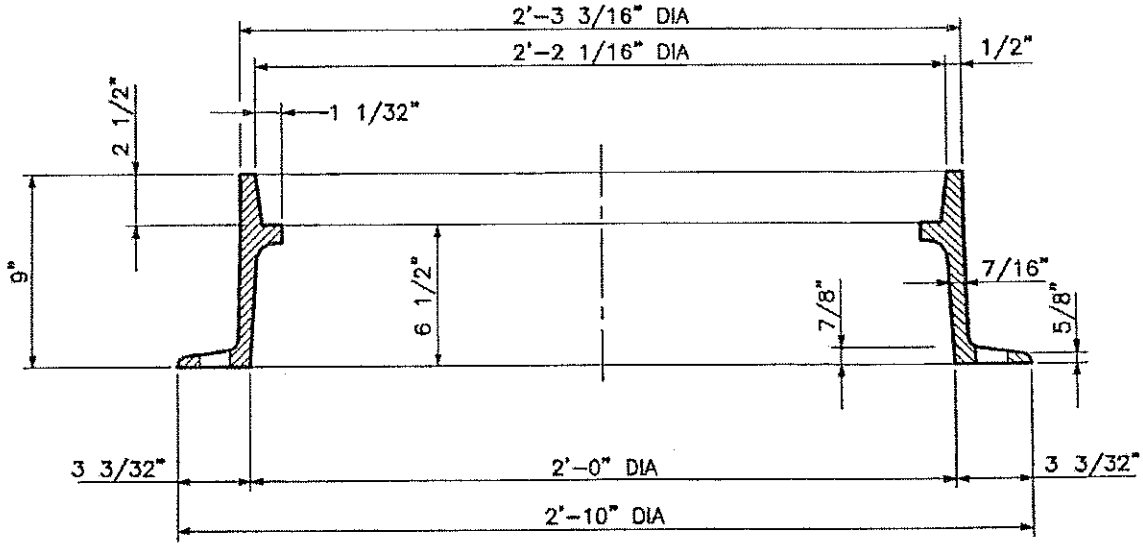

SECTION

NOTES:

1. FOR 24" LOCK TYPE FRAME SEE BC 383.25
2. FOR STD 24" MANHOLE COVER SEE BC 383.21
3. MATERIAL SHALL BE CAST GRAY IRON ASTM A-48, CLASS 35B
4. FRAME SHALL MEET OR EXCEED AASHTO M 306 PROOF LOAD REQUIREMENTS.

CITY OF BALTIMORE 1797	APPROVED: HEAD, BUREAU OF WATER AND WASTEWATER / DIRECTOR, DEPARTMENT OF PUBLIC WORKS	CITY OF BALTIMORE DEPARTMENT OF PUBLIC WORKS BUREAU OF WATER AND WASTEWATER	ISSUED	REVISED	REVISED
			3/2008		
		STANDARD 24 IN. MANHOLE FRAME	DETAIL NO. BC 383.22		
			SCALE: NONE	SHEET 1 OF 1	

F.A.P. NO STP-3057 (4)N
SHA CONTRACT NO: BC320-001-815
BALTIMORE CITY CONTRACT NO. TR08310

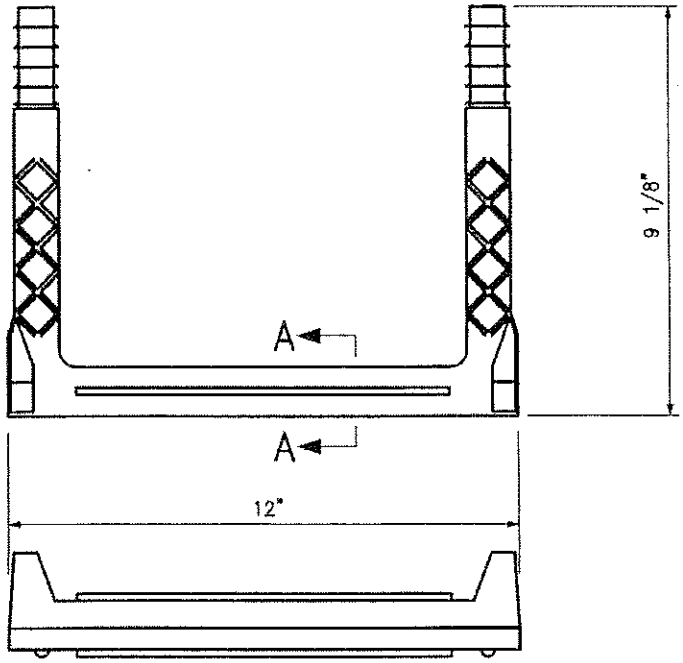

PLAN

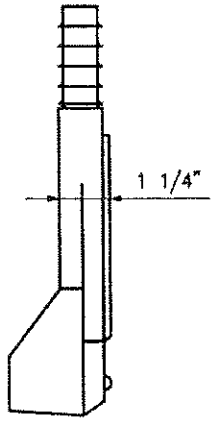

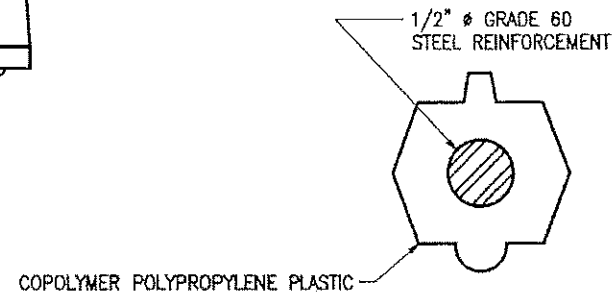

SECTION A–A

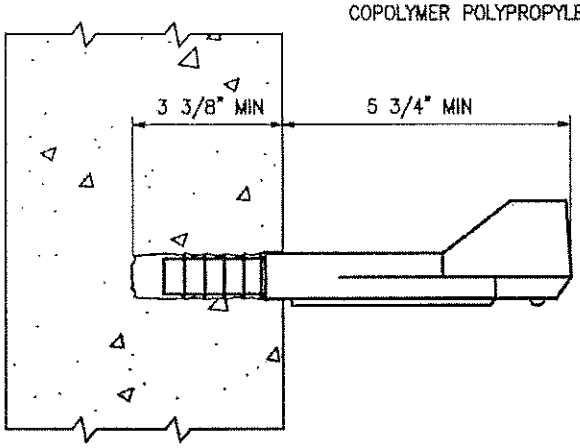

NOTE:

COPOLYMER POLYPROPYLENE SHALL BE CERTIFIED BY THE MANUFACTURER TO CONFORM TO ASTM D4101 AND HAVE A MINIMUM EXPOSED SECTION THICKNESS OF 1/8".

	APPROVED: HEAD, BUREAU OF WATER AND WASTEWATER DIRECTOR, DEPARTMENT OF PUBLIC WORKS	CITY OF BALTIMORE DEPARTMENT OF PUBLIC WORKS BUREAU OF WATER AND WASTEWATER	ISSUED	REVISED	REVISED
			3 / 2008		
		POLYPROPYLENE MANHOLE STEP FOR PRECAST MANHOLES	DETAIL NO. BC 383.93		
			SCALE: NONE	SHEET 1 OF 1	

F.A.P. NO STP-3057 (4)N
SHA CONTRACT NO: BC320-001-815
BALTIMORE CITY CONTRACT NO. TR08310

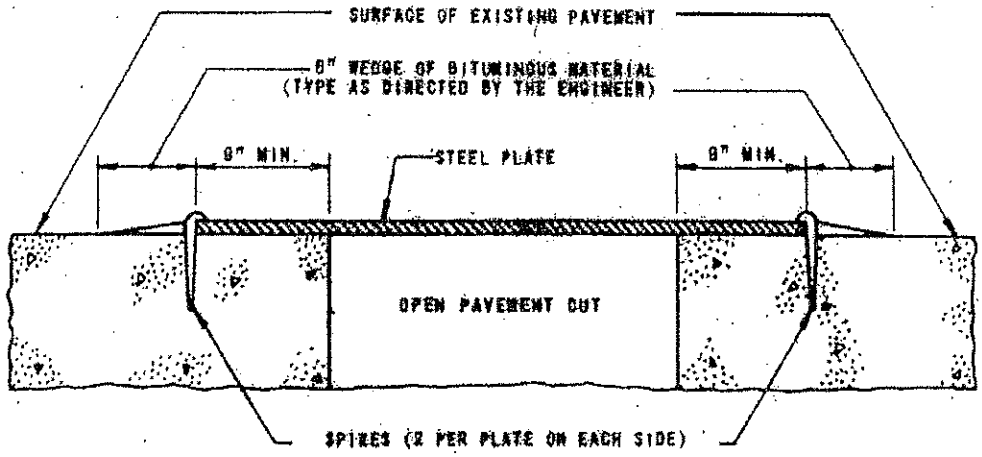

NOTES: PLACE STEEL PLATE ON SURFACE OF EXISTING PAVEMENT.

SPIKES AND BITUMINOUS WEDGE TO BE PLACED ONLY WHERE MAINTENANCE OF TRAFFIC IS REQUIRED. WELDING MAY BE CONSIDERED FOR CONTINUOUS PLATING.

CITY OF BALTIMORE DEPARTMENT OF PUBLIC WORKS				FHWA WASHINGTON OFFICE	STREET CUT AND REPAIR TEMPORARY STEEL PLATE
APPROVED: C. Edward Walter HEAD, BUREAU OF ENGINEERING	ISSUED	7-3-72		7-18-73	CATEGORY CODE
	REVISED				
DETAIL NO. BC-576.17					SCALE: NONE / SHEET 1 OF 1

F.A.P. NO STP-3057 (4)N
SHA CONTRACT NO: BC320-001-815
BALTIMORE CITY CONTRACT NO. TR08310

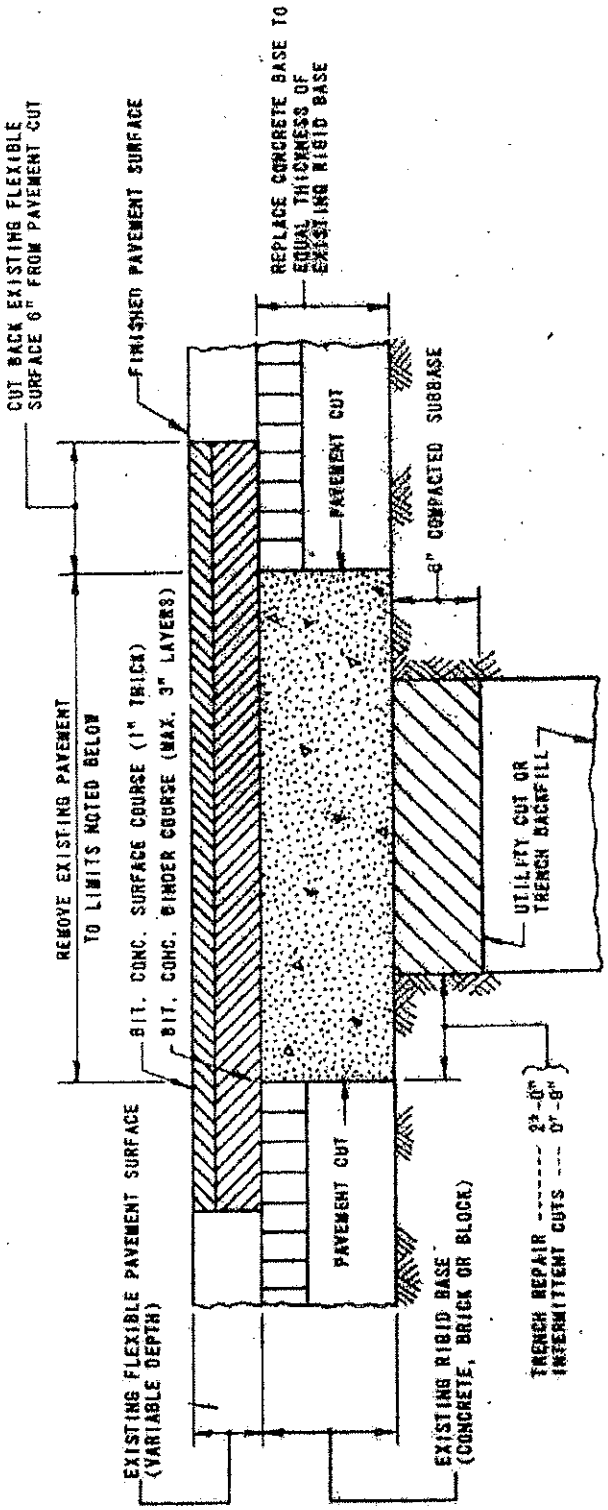

TRENCH REPAIR AND

INTERMITTENT UTILITY CUTS

THIS DETAIL IS APPLICABLE TO THE REPAIR OF TRENCHES AND INTERMITTENT UTILITY CUTS IN EXISTING PAVEMENT HAVING A FLEXIBLE SURFACE AND A RIGID BASE.

SEE STANDARD BC-578.20 (SH. 2 OF 2) FOR CONSTRUCTION NOTES AND OTHER REQUIREMENTS.

CITY OF BALTIMORE DEPARTMENT OF PUBLIC WORKS		FHWA WASHINGTON OFFICE 7-18-73	STREET CUT AND REPAIR FLEXIBLE SURFACE RIGID BASE
APPROVED: C. Edward Walter HEAD, BUREAU OF ENGINEERING	ISSUED 7-3-72 REVISED		CATEGORY CODE
DETAIL NO. BC-576.20			SCALE: NONE SHEET 1 OF 2

CONSTRUCTION NOTES AND REQUIREMENTS

THE FOLLOWING NOTES ARE APPLICABLE TO THE REPAIR OF TRENCHES AND INTERMITTENT UTILITY CUTS IN EXISTING PAVEMENT HAVING A FLEXIBLE SURFACE AND A RIGID BASE.

SEE STANDARD BC-576.20 (SH. 1 OF 2) FOR CONSTRUCTION DETAILS.

REMOVE EXISTING PAVEMENT:

EXISTING PAVEMENT SHALL BE REMOVED TO THE DIMENSIONS SHOWN ON THE CONSTRUCTION DETAIL FOR BOTH LONGITUDINAL AND TRANSVERSE PAVEMENT CUTS. WHERE IT CAN BE DETERMINED THAT A PAVEMENT CUT IS LOCATED WITHIN 2 FEET OF AN EXISTING JOINT, THE ADDITIONAL WIDTH OF EXISTING BRICK AND CONCRETE BASE FROM THE PAVEMENT CUT TO THE EXISTING JOINT SHALL ALSO BE REMOVED.
SALVAGE LONGITUDINAL AND TRANSVERSE TIE BARS WHERE PAVEMENT IS REMOVED TO AN EXISTING JOINT. CUT BACK EXISTING FLEXIBLE SURFACING AS SHOWN.

PAVEMENT REPLACEMENT:

THE TOP 6 INCHES OF THE TRENCH OR INTERMITTENT UTILITY CUT SHALL BE FILLED WITH COMPACTED SUBBASE. TYPE OF SUBBASE MATERIAL AND ADDITIONAL THICKNESS, IF REQUIRED, SHALL BE IN ACCORDANCE WITH THE PLANS OR AS DIRECTED BY THE ENGINEER. SEE ARTICLE 32.03 IN SPECIFICATIONS.
CLEAN AND WET EDGES OF EXISTING PAVEMENT AND COMPACT AND DAMPEN SUBBASE OF ENTIRE OPENING BEFORE PLACING CONCRETE. AT EXISTING JOINTS, REPLACE 3/4 INCH EXPANSION MATERIAL, EXPANSION SLEEVES OR COMPLETE EXPANSION AND CONTRACTION JOINT ASSEMBLIES AS REQUIRED BEFORE PLACING CONCRETE. AT PAVEMENT CUTS, DRILL HOLE AND INSTALL 1/2 OF LONGITUDINAL TIE DEVICE AS DIRECTED BY THE ENGINEER AND IN ACCORDANCE WITH STANDARD BC-572.01 (SH. 2 OF 2) PLACE CONCRETE BASE USING CL. P OR CL. M.E.S. CONCRETE. SEE ARTICLE 35.70 IN SPECIFICATIONS.
THE FLEXIBLE PAVING SHALL BE REPLACED FLUSH WITH THE FINISHED PAVEMENT SURFACE USING A BINDER COURSE WITH MAXIMUM 3 INCH COMPACTED LAYERS AND A 1 INCH COMPACTED SURFACE COURSE. SEE ARTICLE 33.07 IN SPECIFICATIONS.
ALL EXPOSED EDGES OF EXISTING FLEXIBLE PAVEMENT, THE SURFACE OF THE CONCRETE BASE AND EACH LAYER OF BITUMINOUS CONCRETE BINDER COURSE SHALL BE PRIMED WITH A MATERIAL SATISFACTORY TO THE ENGINEER BEFORE THE NEXT LAYER OF BITUMINOUS CONCRETE MIXTURE IS PLACED.

GENERAL NOTES:

ALL WORK TO BE PERFORMED IN ACCORDANCE WITH THE LATEST D.P.W. SPECIFICATIONS. PROCEDURE FOR MAINTENANCE OF TRAFFIC SHALL BE APPROVED BY THE DEPT. OF TRANSIT AND TRAFFIC BEFORE ANY EXISTING PAVEMENT IS REMOVED.

CITY OF BALTIMORE DEPARTMENT OF PUBLIC WORKS		FHWA WASHINGTON OFFICE	STREET CUT AND REPAIR FLEXIBLE SURFACE RIGID BASE
APPROVED: C. Edward Walter HEAD, BUREAU OF ENGINEERING	ISSUED 7-3-72	7-18-75	CATEGORY CODE
	REVISED		SCALE: NONE SHEET 2 OF 2
DETAIL NO. BC-576.20			

APPLICABLE WHERE UTILITY STRUCTURES ARE RAISED FROM 1" TO 6"

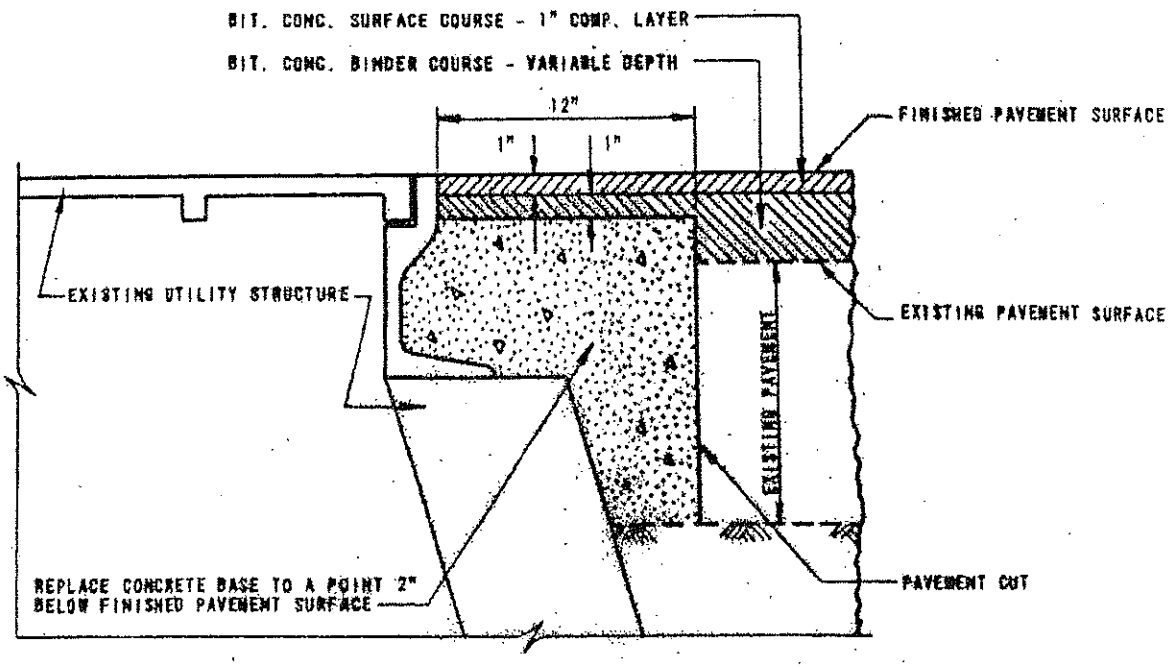

REPAIR AT UTILITY ADJUSTMENT

REMOVE EXISTING PAVEMENT:

EXISTING PAVEMENT SHALL BE REMOVED TO THE PAVEMENT CUT SHOWN ON THE DETAIL.

UTILITY ADJUSTMENTS:

ADJUST ALL UTILITY STRUCTURES AS REQUIRED TO MEET THE FINISHED PAVEMENT SURFACE. THE METHODS AND REQUIREMENTS FOR ADJUSTING UTILITY STRUCTURES AND PAYMENT THEREFOR SHALL BE AS NOTED ON THE PLANS OR IN THE SPECIAL PROVISIONS.

PAVEMENT REPAIR AT UTILITY ADJUSTMENT:

PLACE CONCRETE BASE USING CL. H.E.S. CONC. SEE ARTICLE 35.10 IN SPECIFICATIONS. THE FLEXIBLE PAVING SHALL BE REPLACED FLUSH WITH THE FINISHED PAVEMENT SURFACE USING A BINDER COURSE WITH MAXIMUM 3 INCH COMPACTED LAYERS AND A 1 INCH COMPACTED SURFACE COURSE. SEE ARTICLE 93.07 IN SPECIFICATIONS.
ALL EXPOSED EDGES OF EXISTING FLEXIBLE PAVEMENT, THE SURFACE OF THE CONCRETE BASE AND EACH LAYER OF BITUMINOUS CONCRETE BINDER REPAIR SHALL BE PRIMED WITH A MATERIAL SATISFACTORY TO THE ENGINEER BEFORE THE BITUMINOUS CONCRETE MIXTURE IS PLACED.

GENERAL NOTES:

ALL WORK TO BE PERFORMED IN ACCORDANCE WITH THE LATEST D.P.W. SPECIFICATIONS.
PROCEDURE FOR MAINTENANCE OF TRAFFIC SHALL BE APPROVED BY THE DEPT. OF TRANSIT AND TRAFFIC BEFORE ANY EXISTING PAVEMENT IS REMOVED.
FOR DETAILS OF LOWERING UTILITY STRUCTURES, SEE STANDARD BC-576.22 (SH. 2 OF 3 & SH. 3 OF 3).

CITY OF BALTIMORE DEPARTMENT OF PUBLIC WORKS				FHWA WASHINGTON OFFICE	STREET CUT AND REPAIR UTILITY ADJUSTMENT RAISE - 1" TO 6"
APPROVED: C. Edward Walter HEAD, BUREAU OF ENGINEERING	ISSUED	7-3-72		7-18-73	CATEGORY CODE
	REVISED				
DETAIL NO. BC-576.22					SCALE: NONE / SHEET 1 OF 3

APPLICABLE WHERE UTILITY STRUCTURES ARE LOWERED NOT MORE THAN 2" AND EXISTING PAVEMENT IS FULL DEPTH FLEXIBLE OR FLEXIBLE SURFACE ON RIGID BASE

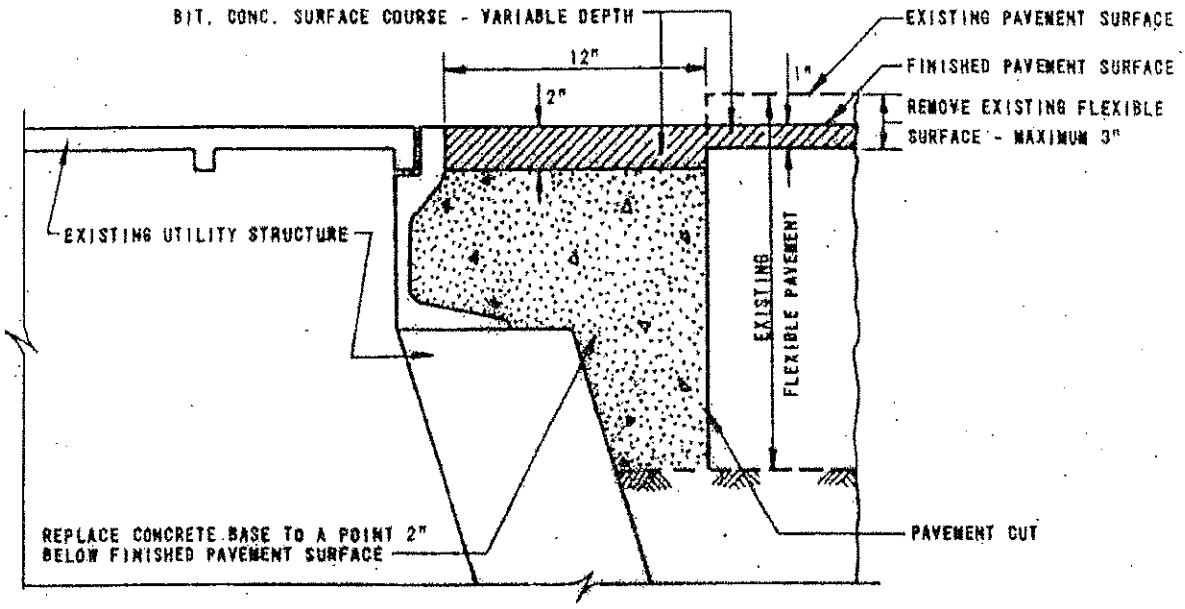

REPAIR AT UTILITY ADJUSTMENT

REMOVE EXISTING PAVEMENT:

EXISTING PAVEMENT SHALL BE REMOVED TO THE PAVEMENT CUT SHOWN ON THE DETAIL.

UTILITY ADJUSTMENTS:

ADJUST ALL UTILITY STRUCTURES AS REQUIRED TO MEET THE FINISHED PAVEMENT SURFACE. THE METHODS AND REQUIREMENTS FOR ADJUSTING UTILITY STRUCTURES AND PAYMENT THEREFOR SHALL BE AS NOTED ON THE PLANS OR IN THE SPECIAL PROVISIONS.

PAVEMENT REPAIR AT UTILITY ADJUSTMENT:

PLACE CONCRETE BASE USING CL. H.E.S. CONC. SEE ARTICLE 35.10 IN SPECIFICATIONS. THE FLEXIBLE PAVING SHALL BE REPLACED FLUSH WITH THE FINISHED PAVEMENT SURFACE USING ONE LAYER OF COMPACTED SURFACE COURSE. SEE ARTICLE 33.07 IN SPECIFICATIONS. ALL EXPOSED EDGES OF EXISTING FLEXIBLE PAVEMENT, THE SURFACE OF THE CONCRETE BASE AND EACH LAYER OF BITUMINOUS CONCRETE BINDER REPAIR SHALL BE PRIMED WITH A MATERIAL SATISFACTORY TO THE ENGINEER BEFORE THE BITUMINOUS CONCRETE MIXTURE IS PLACED.

GENERAL NOTES:

ALL WORK TO BE PERFORMED IN ACCORDANCE WITH THE LATEST D.P.W. SPECIFICATIONS. PROCEDURE FOR MAINTENANCE OF TRAFFIC SHALL BE APPROVED BY THE DEPT. OF TRANSIT AND TRAFFIC BEFORE ANY EXISTING PAVEMENT IS REMOVED.
WHERE UTILITY STRUCTURE IS LOWERED MORE THAN 2" WITH AN EXISTING FULL DEPTH FLEXIBLE PAVEMENT, THE EXISTING PAVEMENT SHOULD BE RECONSTRUCTED. PAVEMENT REPLACEMENT UNDER THESE CONDITIONS WILL BE AS NOTED ON THE PLANS OR AS DIRECTED BY THE ENGINEER.
WHERE UTILITY STRUCTURE IS LOWERED MORE THAN 2" AND THE EXISTING FLEXIBLE PAVEMENT HAS A RIGID BASE, REFER TO STANDARD BC-576.22 (SH. 3 OF 3) FOR CONSTRUCTION DETAILS.

CITY OF BALTIMORE DEPARTMENT OF PUBLIC WORKS			FHWA WASHINGTON OFFICE	STREET CUT AND REPAIR UTILITY ADJUSTMENT LOWER - 2" MAX.
APPROVED: C. Edward Walter HEAD, BUREAU OF ENGINEERING	ISSUED	7-3-73	7-18-73	CATEGORY CODE
	REVISED			SCALE: NONE / SHEET 2 OF 3
DETAIL NO. BC-576.22				

F.A.P. NO STP-3057 (4)N
SHA CONTRACT NO: BC320-001-815
BALTIMORE CITY CONTRACT NO. TR08310

APPLICABLE WHERE UTILITY STRUCTURE IS LOWERED FROM 2" TO 6" AND THE EXISTING PAVEMENT HAS A FLEXIBLE SURFACE ON A RIGID BASE

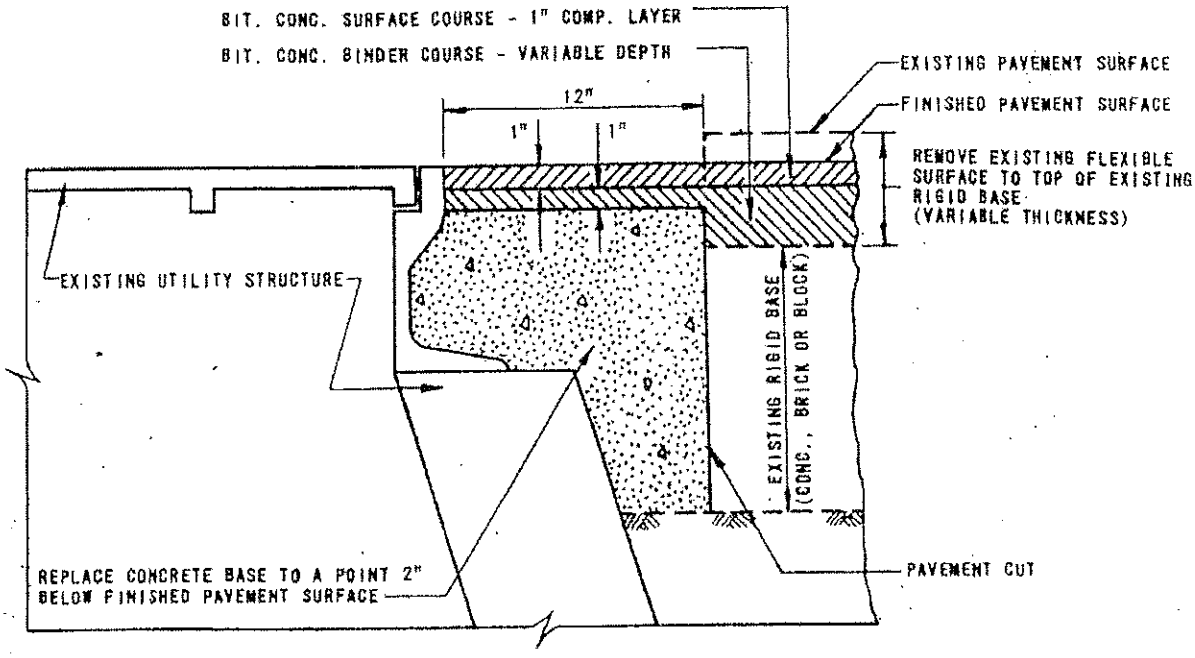

REPAIR AT UTILITY ADJUSTMENT

REMOVE EXISTING PAVEMENT:

EXISTING PAVEMENT SHALL BE REMOVED TO THE PAVEMENT CUT SHOWN ON THE DETAIL.

UTILITY ADJUSTMENTS:

ADJUST ALL UTILITY STRUCTURES AS REQUIRED TO MEET THE FINISHED PAVEMENT SURFACE; THE METHODS AND REQUIREMENTS FOR ADJUSTING UTILITY STRUCTURES AND PAYMENT THEREFOR SHALL BE AS NOTED ON THE PLANS OR IN THE SPECIAL PROVISIONS.

PAVEMENT REPAIR AT UTILITY ADJUSTMENT:

PLACE CONCRETE BASE USING CL. H.E.S. CONC. SEE ARTICLE 35.10 IN SPECIFICATIONS. THE FLEXIBLE PAVING SHALL BE REPLACED FLUSH WITH THE FINISHED PAVEMENT SURFACE USING A BINDER COURSE WITH MAXIMUM 3 INCH COMPACTED LAYERS AND A 1 INCH COMPACTED SURFACE COURSE. SEE ARTICLE 33.07 IN SPECIFICATIONS.
ALL EXPOSED EDGES OF EXISTING FLEXIBLE PAVEMENT, THE SURFACE OF THE CONCRETE BASE AND EACH LAYER OF BITUMINOUS CONCRETE BINDER REPAIR SHALL BE PRIMED WITH A MATERIAL SATISFACTORY TO THE ENGINEER BEFORE THE BITUMINOUS CONCRETE MIXTURE IS PLACED.

GENERAL NOTES:

ALL WORK TO BE PERFORMED IN ACCORDANCE WITH THE LATEST D.P.W. SPECIFICATIONS.
PROCEDURE FOR MAINTENANCE OF TRAFFIC SHALL BE APPROVED BY THE DEPT. OF TRANSIT AND TRAFFIC BEFORE ANY EXISTING PAVEMENT IS REMOVED.
WHERE UTILITY STRUCTURE IS LOWERED MORE THAN 6" OR LOWER THAN 1" ABOVE THE TOP OF THE EXISTING RIGID BASE, THE EXISTING PAVEMENT SHOULD BE RECONSTRUCTED. PAVEMENT REPLACEMENT UNDER THESE CONDITIONS WILL BE AS NOTED ON THE PLANS OR AS DIRECTED BY THE ENGINEER.

CITY OF BALTIMORE DEPARTMENT OF PUBLIC WORKS			FHWA WASHINGTON OFFICE	STREET CUT AND REPAIR UTILITY ADJUSTMENT LOWER - 2" TO 6"
APPROVED: C. Edward Walter HEAD, BUREAU OF ENGINEERING	ISSUED	7-3-72	7-18-73	CATEGORY CODE
	REVISED			SCALE: NONE / SHEET 3 OF 3
DETAIL NO. BC-576.22				

F.A.P. NO STP-3057 (4)N
SHA CONTRACT NO: BC320-001-815
BALTIMORE CITY CONTRACT NO. TR08310

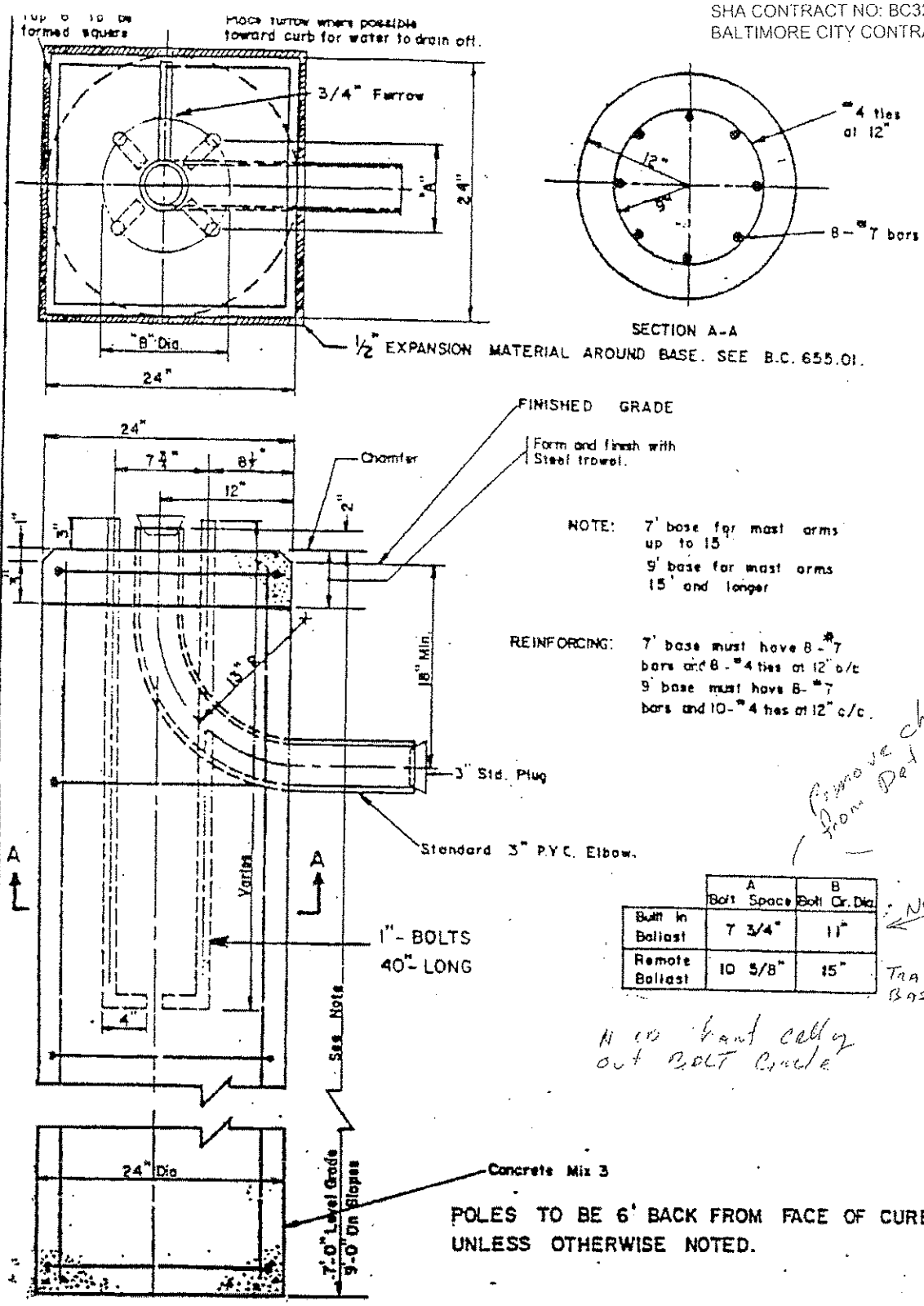

NOTE: 7' base for mast arms up to 15'
9' base for mast arms 15' and longer

REINFORCING: 7' base must have 8 - #7 bars and 8 - #4 ties at 12" c/c
9' base must have 8 - #7 bars and 10 - #4 ties at 12" c/c.

Remove chart from Detail

	A Bolt Space	B Bolt Cir. Dia.
Built in Ballast	7 3/4"	11"
Remote Ballast	10 5/8"	15"

Non-Transformer Base

Transformer Base only

Need chart calling out Bolt Circle

POLES TO BE 6' BACK FROM FACE OF CURB UNLESS OTHERWISE NOTED.

CITY OF BALTIMORE DEPARTMENT OF PUBLIC WORKS		10-7-86	FHWA WASHINGTON OFFICE	ROADWAY PEDESTAL BASE FOR LIGHT POLES-AUGURED
APPROVED: C. Edward Eisenberg HEAD, BUREAU OF ENGINEERING	ISSUED 2/8/71		8-17-71	CATEGORY CODE 80111 & 80115
	REVISED 5-10-77		7-28-77	
	11-10-82			
DETAIL NO. BC 801.01	3-18-83			SCALE: NONE SHEET 1 OF 1

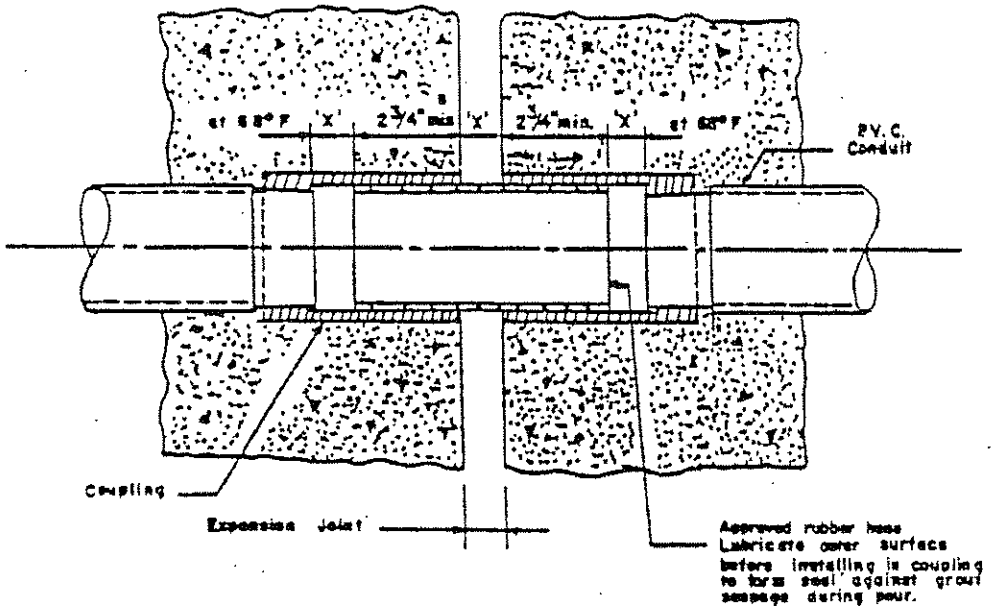

Note:
Dimension 'X' to be determined by design requirements.

CITY OF BALTIMORE DEPARTMENT OF PUBLIC WORKS		FHWA WASHINGTON OFFICE	CONDUIT EXPANSION COUPLING PARAPET
APPROVED: [signature] HEAD, BUREAU OF ENGINEERING	ISSUED 2-9-71 REVISED 3-20-77	8-17-71	CATEGORY CODE 80206
DETAIL NO. BC 802.01			SCALE: NONE SHEET 1 OF 2

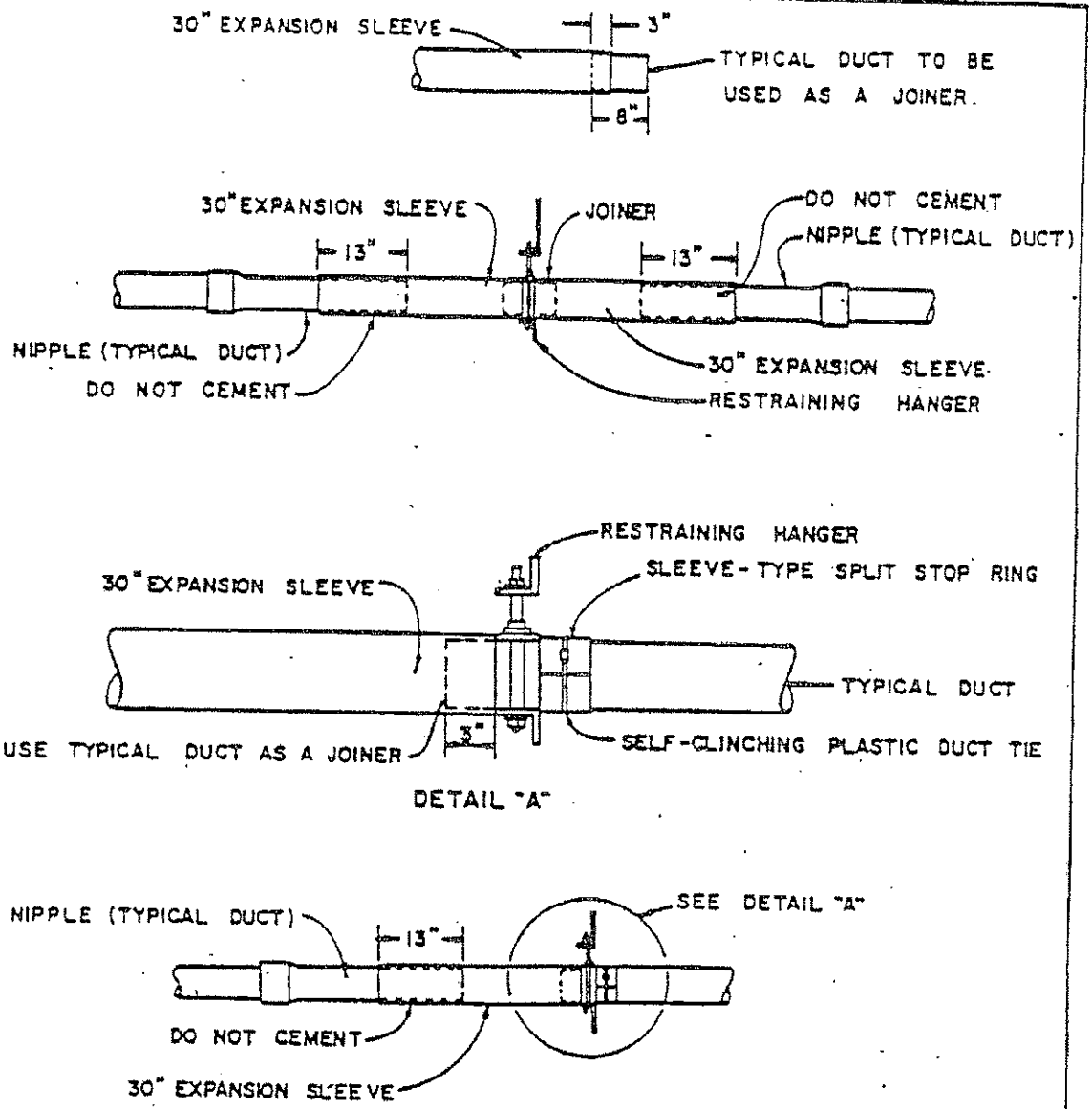

NOTE: BEVEL INSIDE EDGES OF SLEEVES, NIPPLE, AND JOINER.
SCORE ENDS OF ALL THREADS AFTER INSTALLATION.

CITY OF BALTIMORE DEPARTMENT OF PUBLIC WORKS		FHWA WASHINGTON OFFICE	CONDUIT EXPANSION JOINT FOR SUSPENDED ELECTRICAL DUCT
APPROVED William E. Riley HEAD, BUREAU OF ENGINEERING	ISSUED 5-10-77 REVISED		CATEGORY CODE 80206
DETAIL BC 802.01			SCALE: NONE SHEET 2 OF 2

SQUARE ADAPTER 3-1/2" TO 3" AND 4" P.V.C.

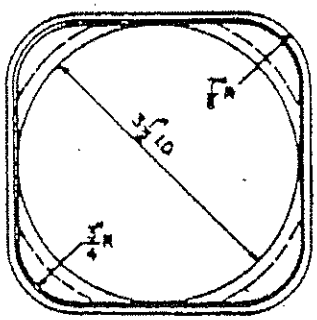

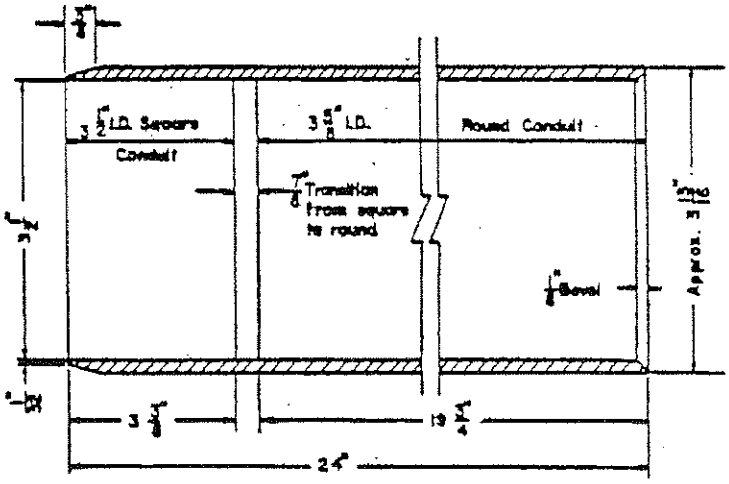

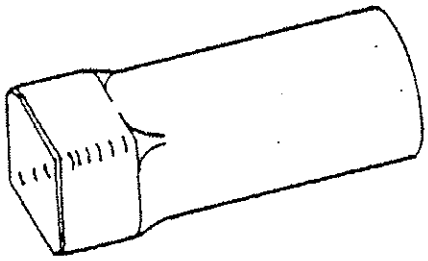

SQUARE BORE ADAPTER

USED TO CONVERT FROM "SQUARE" 3-1/2" TILE DUCT TO 3" AND 4" ROUND P.V.C. PLASTIC DUCT.

MADE OF P.V.C. PLASTIC IN ACCORDANCE TO THESE SPECIFICATION.

L.A.

CITY OF BALTIMORE DEPARTMENT OF PUBLIC WORKS			Bureau of Public Roads: Maryland Division	Washington Office	SQUARE BORE ADAPTER
Approved: William E. Riley, Head, Bureau of Engineering	Issued	6-1-77			Category Code: 82401-82435
	Revised				
DETAIL B.C. 802.03					Scale: NONE — Sheet 1 of 4

SQUARE BORE ADAPTER 3-3/4" TO 4"

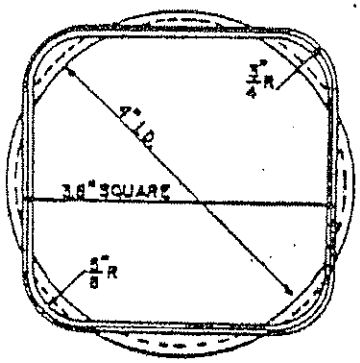

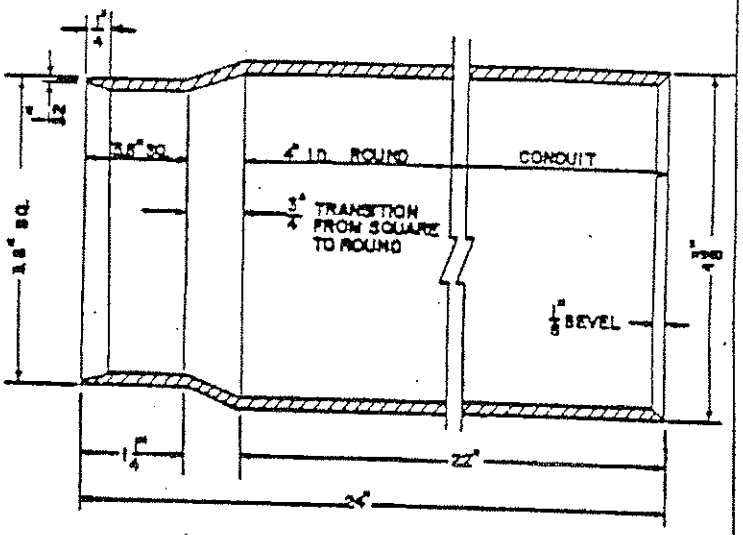

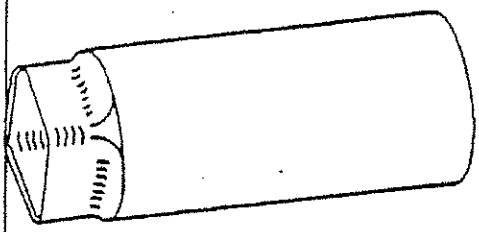

SQUARE BORE ADAPTER

USED TO CONVERT FROM "SQUARE" 3-3/4" TILE DUCT TO 4" ROUND PVC PLASTIC DUCT.

MADE OF PVC PLASTIC IN ACCORDANCE WITH THIS SPEC.

CITY OF BALTIMORE DEPARTMENT OF PUBLIC WORKS			Bureau of Public Roads		SQUARE BORE ADAPTER
Approved: William E. Pilson	Issued	6-1-77	Maryland Division	Washington Office	
Head, Bureau of Engineering	Revised				Category Code 82401-82435
DETAIL B.C. 802.03					Scale: NONE Sheet 2 of 4

DUCT PLUGS

P.V.C.	5"	Tapered
P.V.C.	4"	Tapered
P.V.C.	3 ½"	Tapered

DUCT TERMINATORS

ABS	5"	2-Way
ABS	5"	3-Way

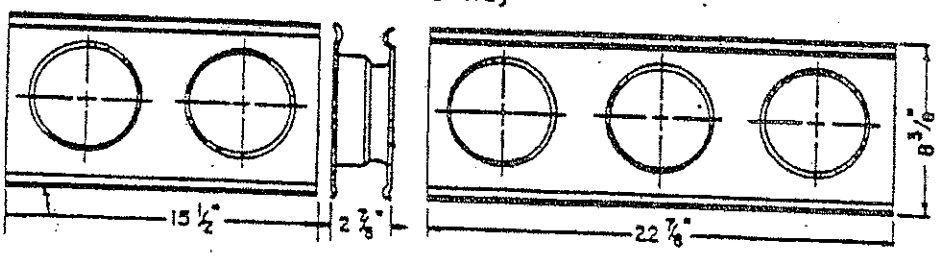

DUCT BELL ENDS

P.V.C.	5"	Molded
P.V.C.	4"	Molded
P.V.C.	3"	Molded

CITY OF BALTIMORE DEPARTMENT OF PUBLIC WORKS		Bureau of Public Roads: Maryland Division / Washington Office	L.A. DUCT PLUGS, BELL ENDS & TERMINATORS	
Approved: William E. Riley, Head, Bureau of Engineering	Issued 6-1-77		Category Code 82401 - 82435	
DETAIL B.C. 802.03	Revised		Scale: NONE	Sheet 3 of 4

F.A.P. NO STP-3057 (4)N
SHA CONTRACT NO. BC320-001-815
BALTIMORE CITY CONTRACT NO. TR08310

SPLIT DUCT (LOCKING TONGUE & GROOVE)
10 FT LENGTHS

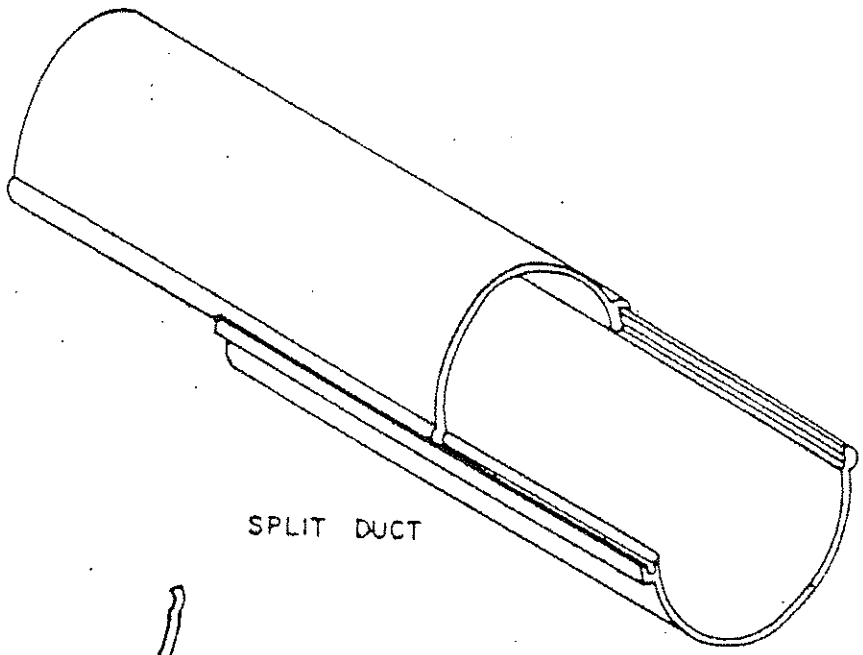

SPLIT DUCT

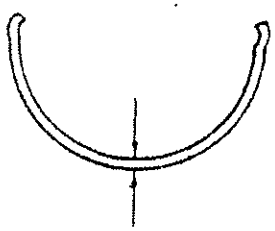

MINIMUM WALL THICKNESSES

4" E B	0.092
4" D B.	0.136
5" E B.	0.116
5" D B	0.169

SPLIT DUCT IS USED TO COVER EXISTING UNDERGROUND CABLES OR REPAIRING DAMAGED DUCT WITHOUT CUTTING OR RESPLICING EXISTING CABLES. MADE OF P.V.C. DUCT.

A.S.T.M. F 512
RATED 90° C

CITY OF BALTIMORE DEPARTMENT OF PUBLIC WORKS		FHWA	SPLIT DUCT
APPROVED William E. Riley CHIEF, BUREAU OF ENGINEERING	DRAWN 9-20-78 REVISED 10-10-84	9-20-78	CATEGORY CODE
DETAIL B C 802 03			SCALE: NONE — SHEET 4 OF 4

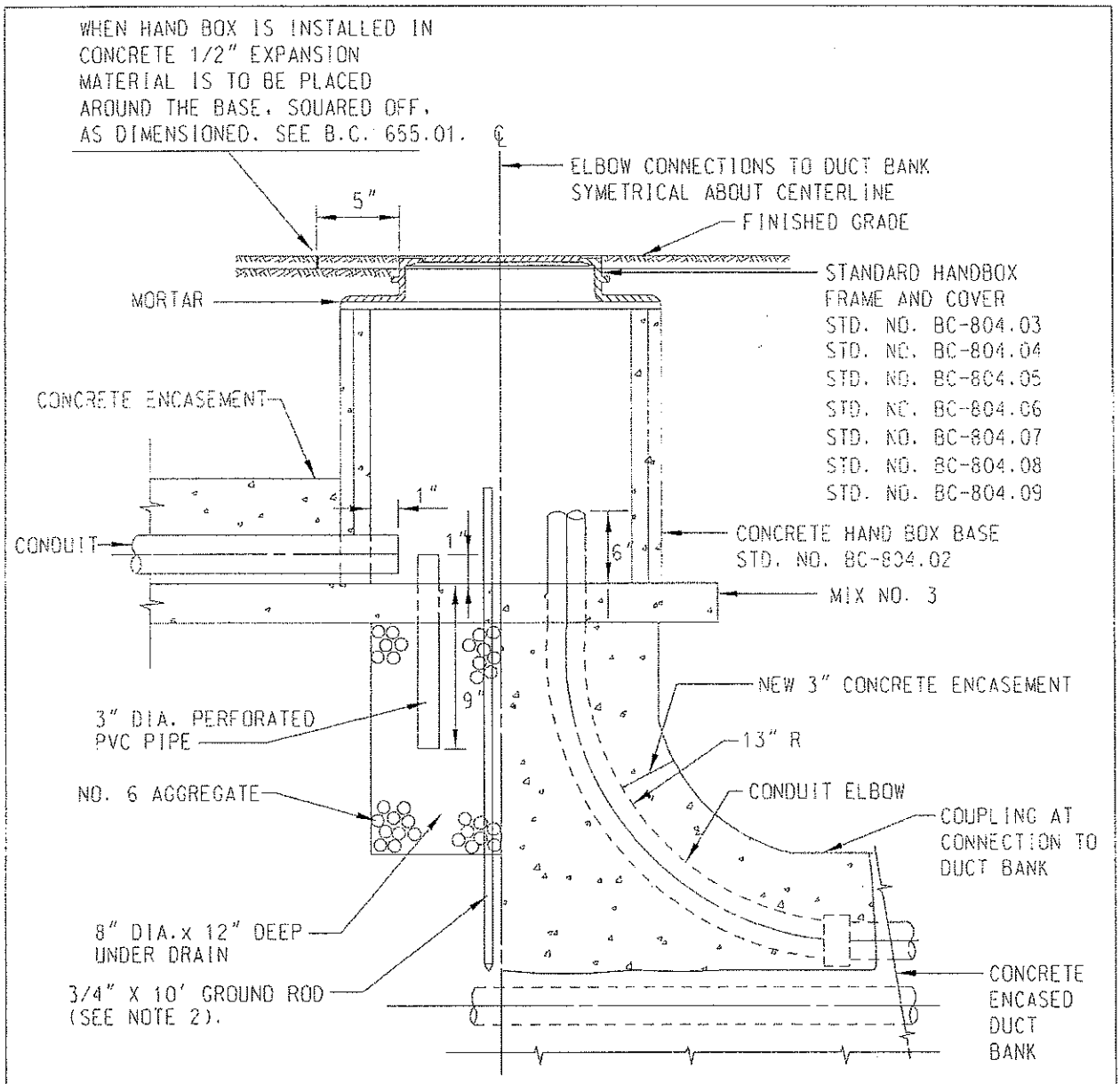

NOTES:

1. WHERE THE INGRESS & EGRESS OF THE CONDUIT IS FROM THE SIDES OF THE HAND BOX, THE DIAMETER OF THE UNDER DRAIN SHALL BE ENLARGED TO 10" AND SHALL BE CENTERED UNDER THE HANDBOX.

2. 3/4"x 10' GROUND ROD INSTALLED WHERE INDICATED ON THE PLANS AND CONFORMING TO THE NATIONAL ELECTRICAL CODE.

CAD FILE: DR.-015.dwg

CITY OF BALTIMORE DEPARTMENT OF TRANSPORTATION			FHWA WASHINGTON OFFICE	HANDBOX - CONDUIT TYPICAL INSTALLATION
APPROVED: _____	ISSUED			CATEGORY CODE:
	REVISED	8-5-93		
DETAIL NO. 804.01				SCALE: NONE / SHEET 1 OF 1

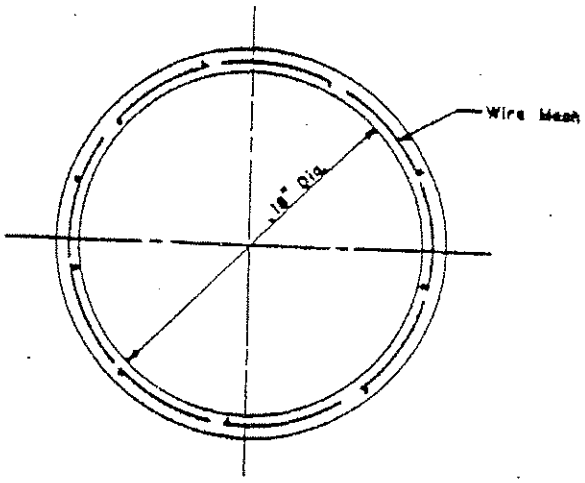

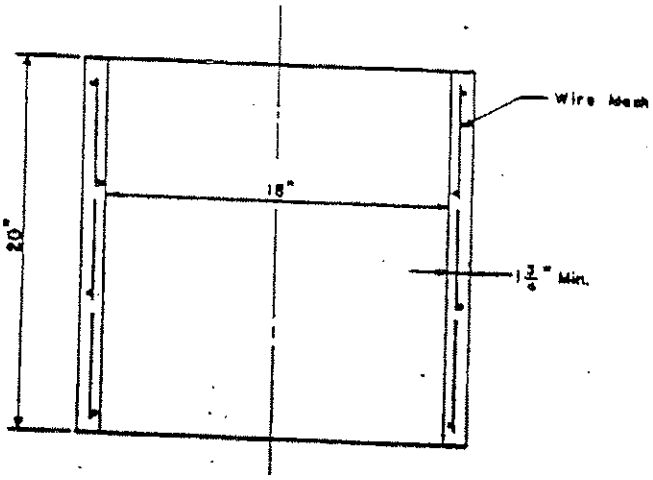

NOTE:
Wire Mesh shall be 2" X 2" - NO. 10 wire
Concrete shall be Mix 3.

CITY OF BALTIMORE DEPARTMENT OF PUBLIC WORKS			BUREAU OF PUBLIC ROADS		HANDBOX - CONDUIT STD. CONC. BASE
APPROVED: C. Edward Walter	ISSUED	5-1-70	MARYLAND DIVISION	WASHINGTON OFFICE	
HEAD, BUREAU OF ENGINEERING	REVISED	8-10-70		10-30-70	
DETAIL NO. BC 80402		7-18-72		7-18-73	CATEGORY CODE 80407 & 80408
					SCALE: NONE / SHEET 1 OF 1

NOTE: Material shall be cast iron, 21,000 psi. tensile strength.

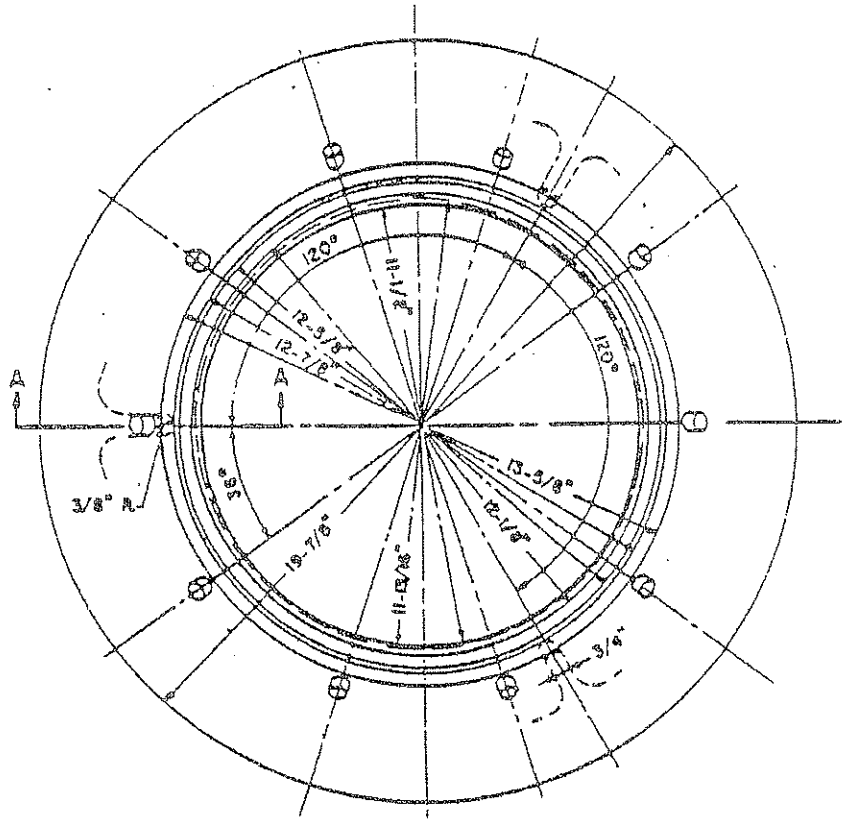

PLAN

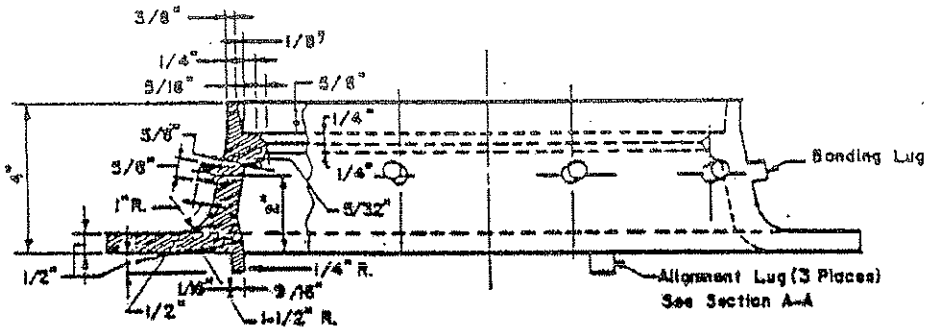

A-A ELEVATION & SECTION

NOTE:
Average Weight of Frame - 37.75 lbs

CITY OF BALTIMORE DEPARTMENT OF PUBLIC WORKS		BUREAU OF PUBLIC ROADS: MARYLAND DIVISION / WASHINGTON OFFICE		HANDBOX - CONDUIT STD. FRAME
APPROVED: C. Edward Rinehart HEAD, BUREAU OF ENGINEERING	ISSUED 5-1-70		10-20-70	CATEGORY CODE 80407 & 80408
	REVISED 9-10-70			
DETAIL NO. BC 804.03				SCALE: NONE SHEET 1 OF 1

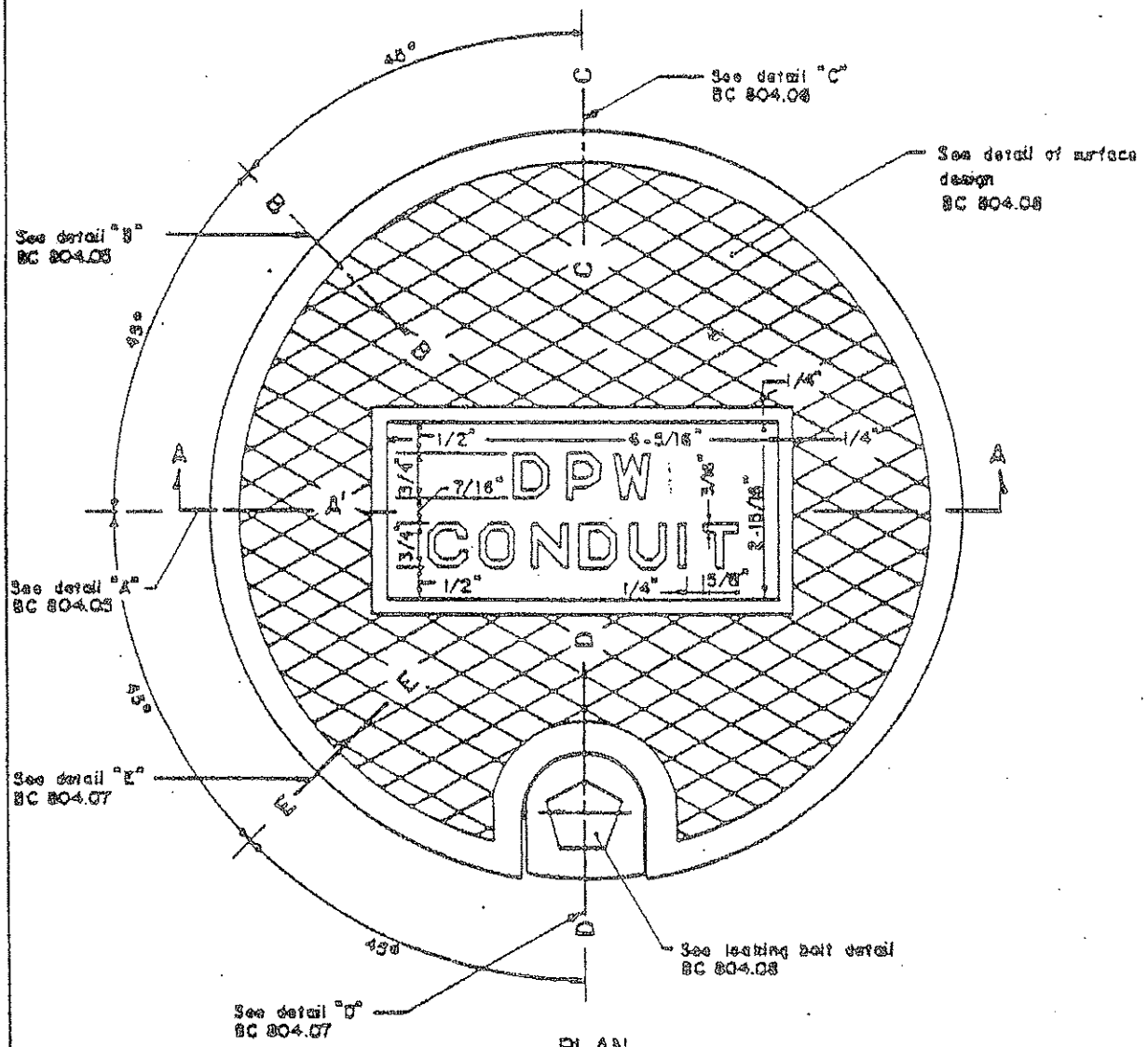

PLAN

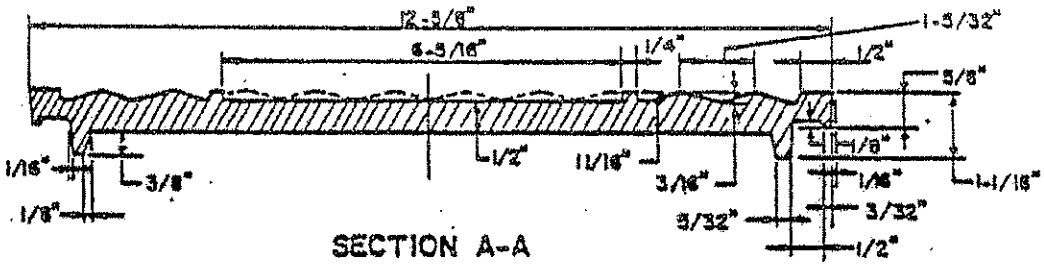

SECTION A-A

NOTE:
Handbox cover material shall be cast steel,
21,000 psi tensile strength. Weight ≈ 21 lbs.

CITY OF BALTIMORE DEPARTMENT OF PUBLIC WORKS		FHWA WASHINGTON OFFICE	HANDBOX - CONDUIT STD. COVER
APPROVED: C. Edward Walker HEAD, BUREAU OF ENGINEERING	ISSUED 3-1-75		CATEGORY CODE 80408
DETAIL NO. BC 804 .04	REVISED		SCALE: NONE SHEET 1 OF 1

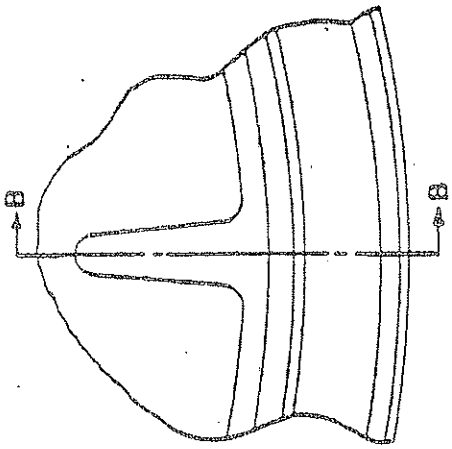

PLAN-BOTTOM VIEW

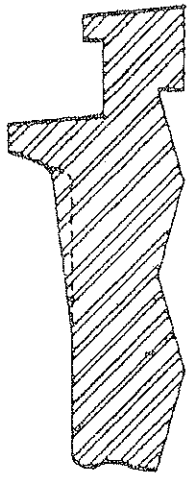

SECTION B-B

DETAIL "B"

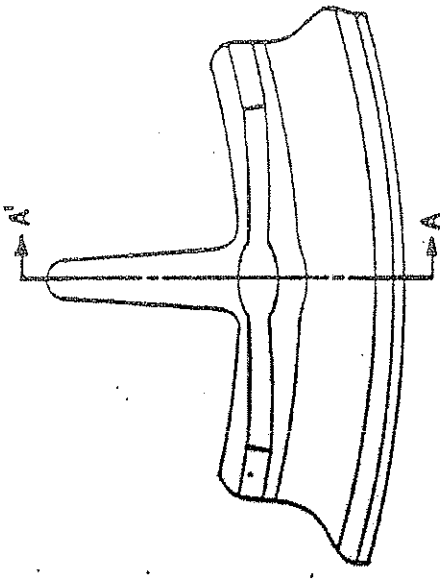

PLAN-BOTTOM VIEW

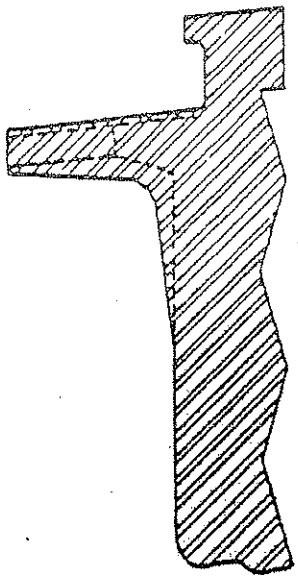

SECTION A-A'

DETAIL "A"

CITY OF BALTIMORE DEPARTMENT OF PUBLIC WORKS			BUREAU OF PUBLIC ROADS MARYLAND DIVISION / WASHINGTON OFFICE	HANDBOX - CONDUIT STD COVER - DETAILS 'A' & 'B'.	
APPROVED C. Edward Rybczynski HEAD, BUREAU OF ENGINEERING	ISSUED	5-1-70		CATEGORY CODE	80407 & 80408
	REVISED	5-10-70			
DETAIL NO. BC 804 .05				SCALE: FULL SIZE	SHEET 1 OF 1

F.A.P. NO STP-3057 (4)N
SHA CONTRACT NO: BC320-001-815
BALTIMORE CITY CONTRACT NO. TR08310

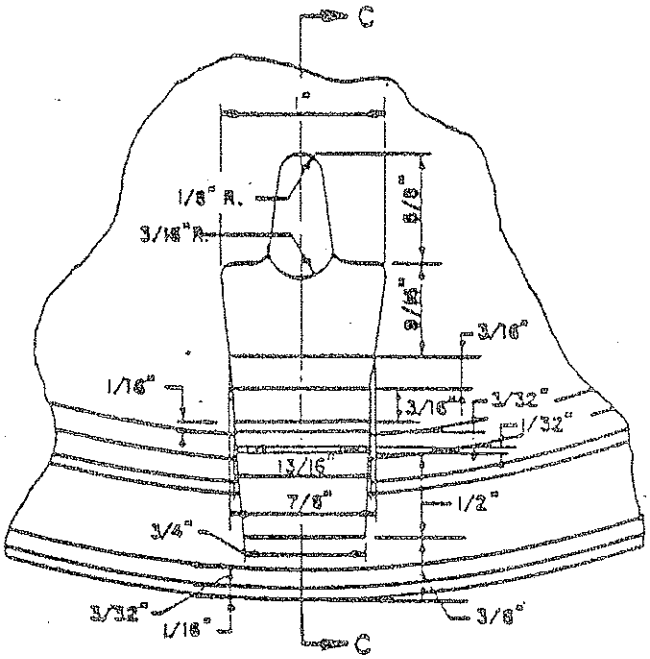

PLAN-BOTTOM VIEW

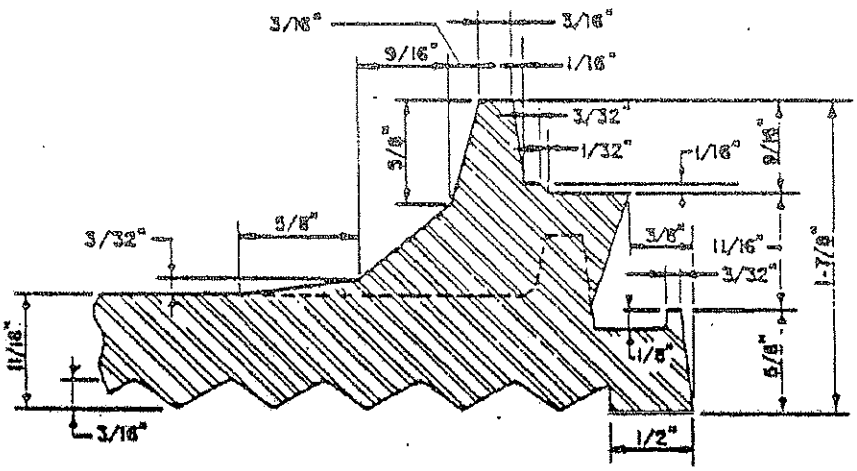

SECTION C-C

DETAIL 'C'

CITY OF BALTIMORE DEPARTMENT OF PUBLIC WORKS		BUREAU OF PUBLIC ROADS MARYLAND DIVISION	WASHINGTON OFFICE	HANDBOX - CONDUIT STD COVER - DETAIL 'C'
APPROVED C. Edward [illegible] HEAD, BUREAU OF ENGINEERING	ISSUED 5-1-70		[illegible]	CATEGORY CODE 80407 & 80408
	REVISED 8-10-70			
DETAIL NO. BC 804 .06				SCALE: FULL SIZE SHEET 1 OF __

F.A.P. NO STP-3057 (4)N
SHA CONTRACT NO: BC320-001-815
BALTIMORE CITY CONTRACT NO. TR08310

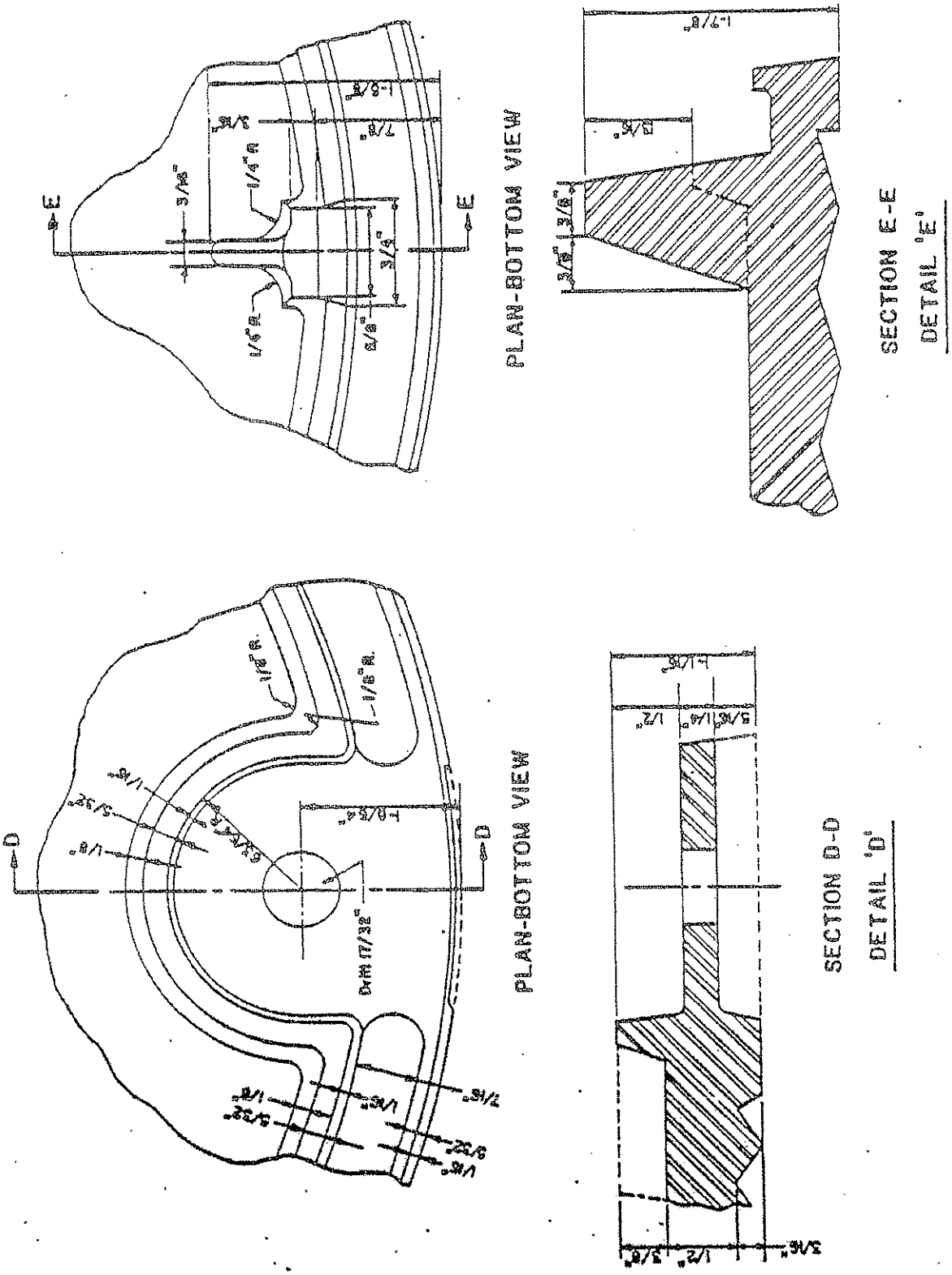

CITY OF BALTIMORE DEPARTMENT OF PUBLIC WORKS		BUREAU OF PUBLIC ROADS MARYLAND DIVISION / WASHINGTON OFFICE	HANDBOX - CONDUIT STD. COVER - DETAILS 'D' & 'E'	
APPROVED: E. Edward Walter HEAD, BUREAU OF ENGINEERING	ISSUED 5-1-70 REVISED 8-10-70		CATEGORY CODE 80407 & 80408	
DETAIL NO. BC 804-07			SCALE: FULL SIZE	SHEET 1 OF 1

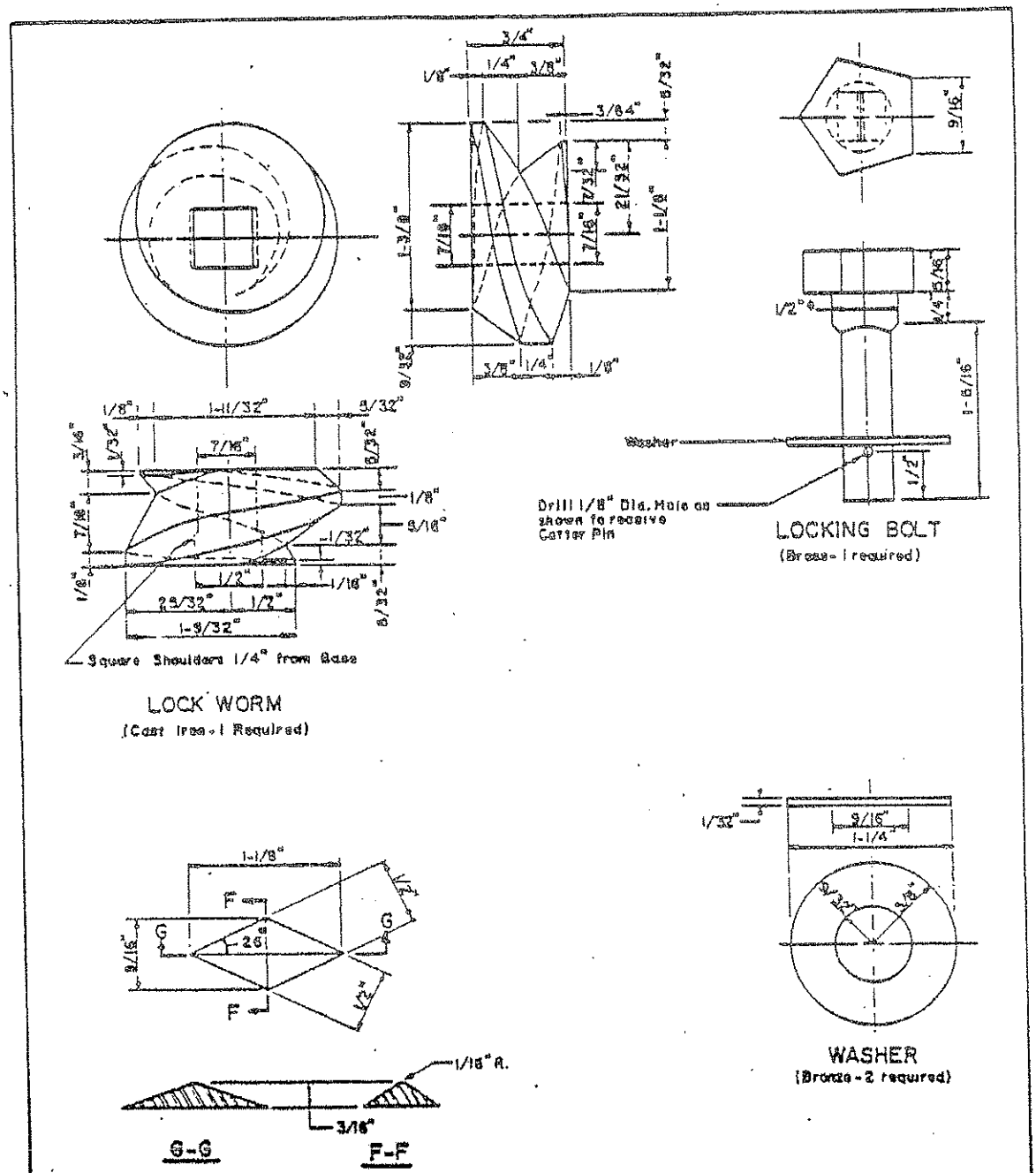

CITY OF BALTIMORE DEPARTMENT OF PUBLIC WORKS			BUREAU OF PUBLIC ROADS MARYLAND DIVISION	WASHINGTON OFFICE	HANDBOX - CONDUIT STD. COVER-LOCKING BOLT & SURFACE DESIGN DETAILS
APPROVED: C. Edward Walter HEAD, BUREAU OF ENGINEERING	ISSUED	5-1-70			CATEGORY CODE 80407 & 80408
	REVISED	6-10-70			
DETAIL NO. BC 804.08					SCALE: FULL SCALE SHEET 1 OF 1

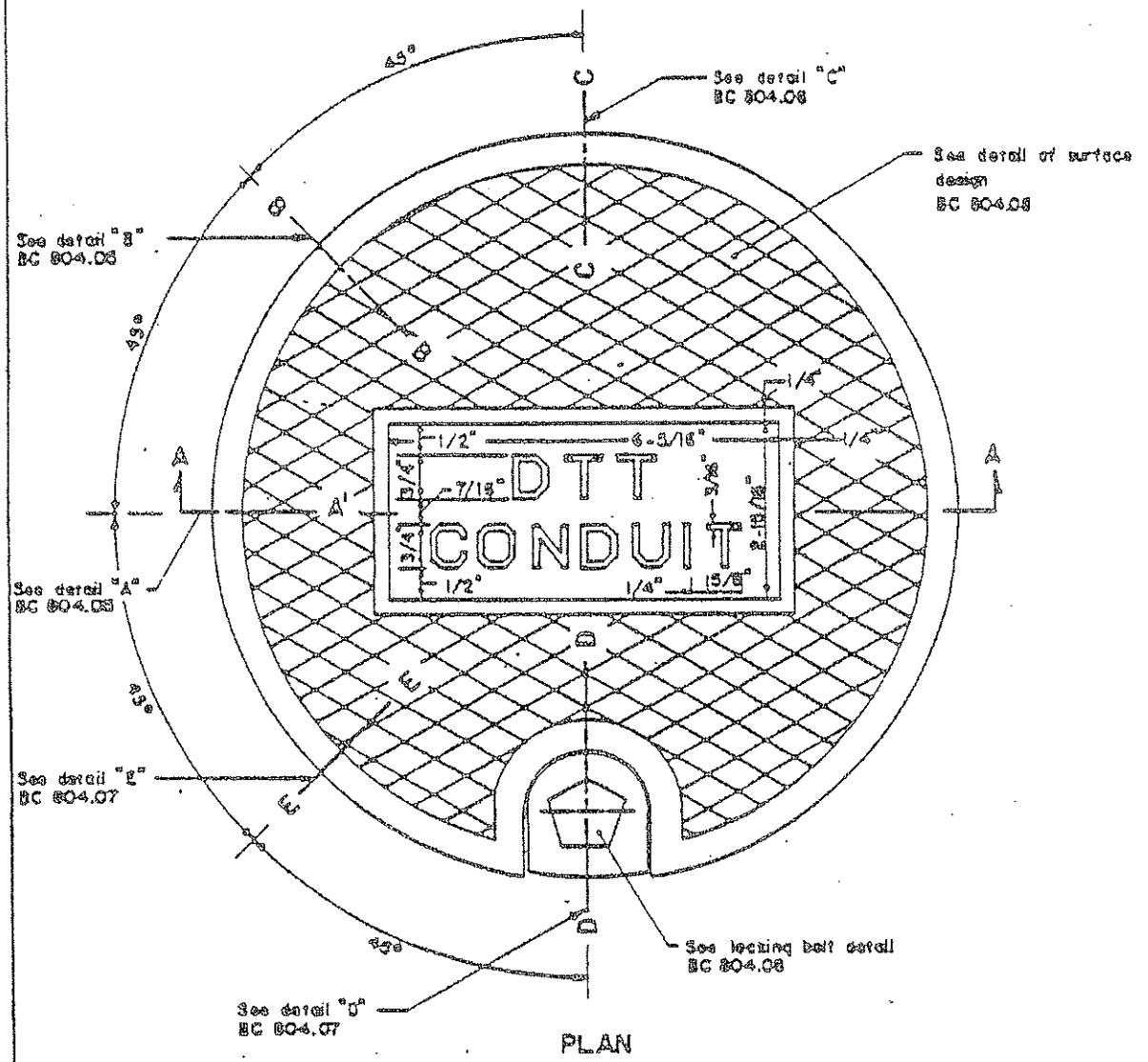

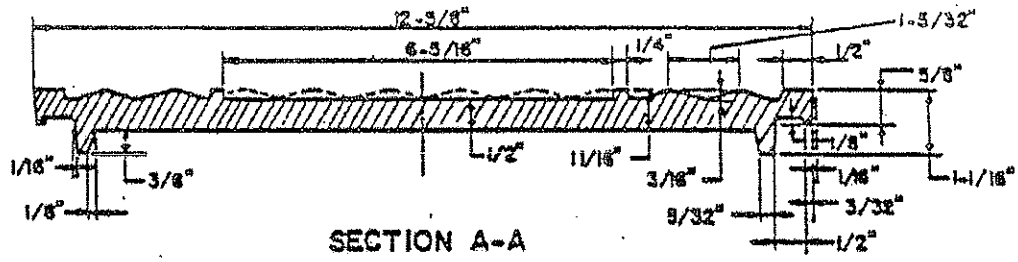

NOTE:
Handbox cover material shall be cast steel,
21,000 psi tensile strength. Weight = 21 lbs.

CITY OF BALTIMORE DEPARTMENT OF PUBLIC WORKS			FHWA WASHINGTON OFFICE	STANDARD HANDBOX COVER – DTT
APPROVED: HEAD, BUREAU OF ENGINEERING	ISSUED	8-4-70		CATEGORY CODE 80407
	REVISED			
DETAIL NO. BC 804.09				SCALE: NONE / SHEET 1 OF 1

F.A.P. NO STP-3057 (4)N
SHA CONTRACT NO: BC320-001-815
BALTIMORE CITY CONTRACT NO. TR08310

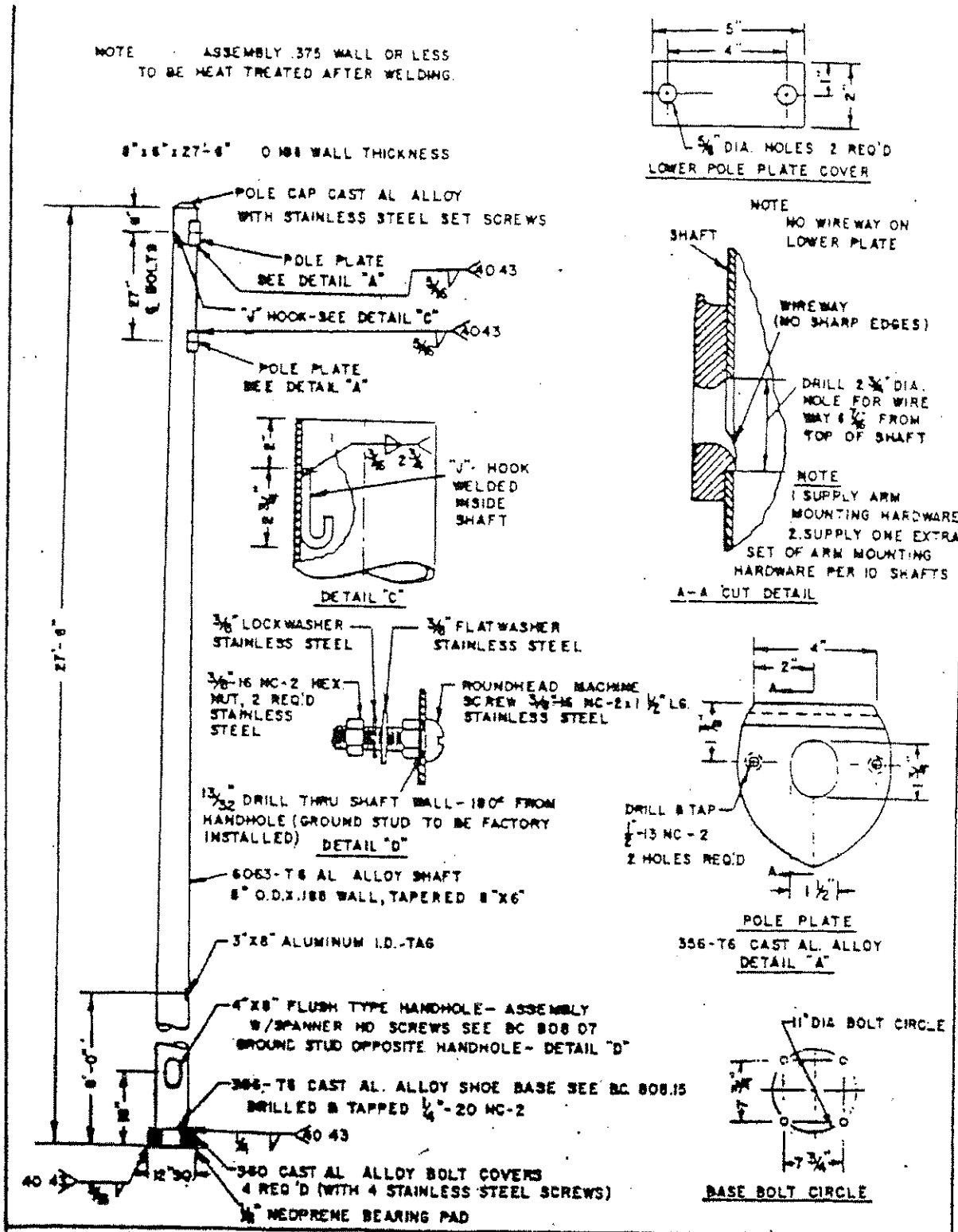

CITY OF BALTIMORE DEPARTMENT OF PUBLIC WORKS		FHWA	TYPICAL LIGHT STANDARD 30' AW POLE
	10 7 86		80812 - 81418
DETAIL No. 808.02			SHEET 1 OF 2

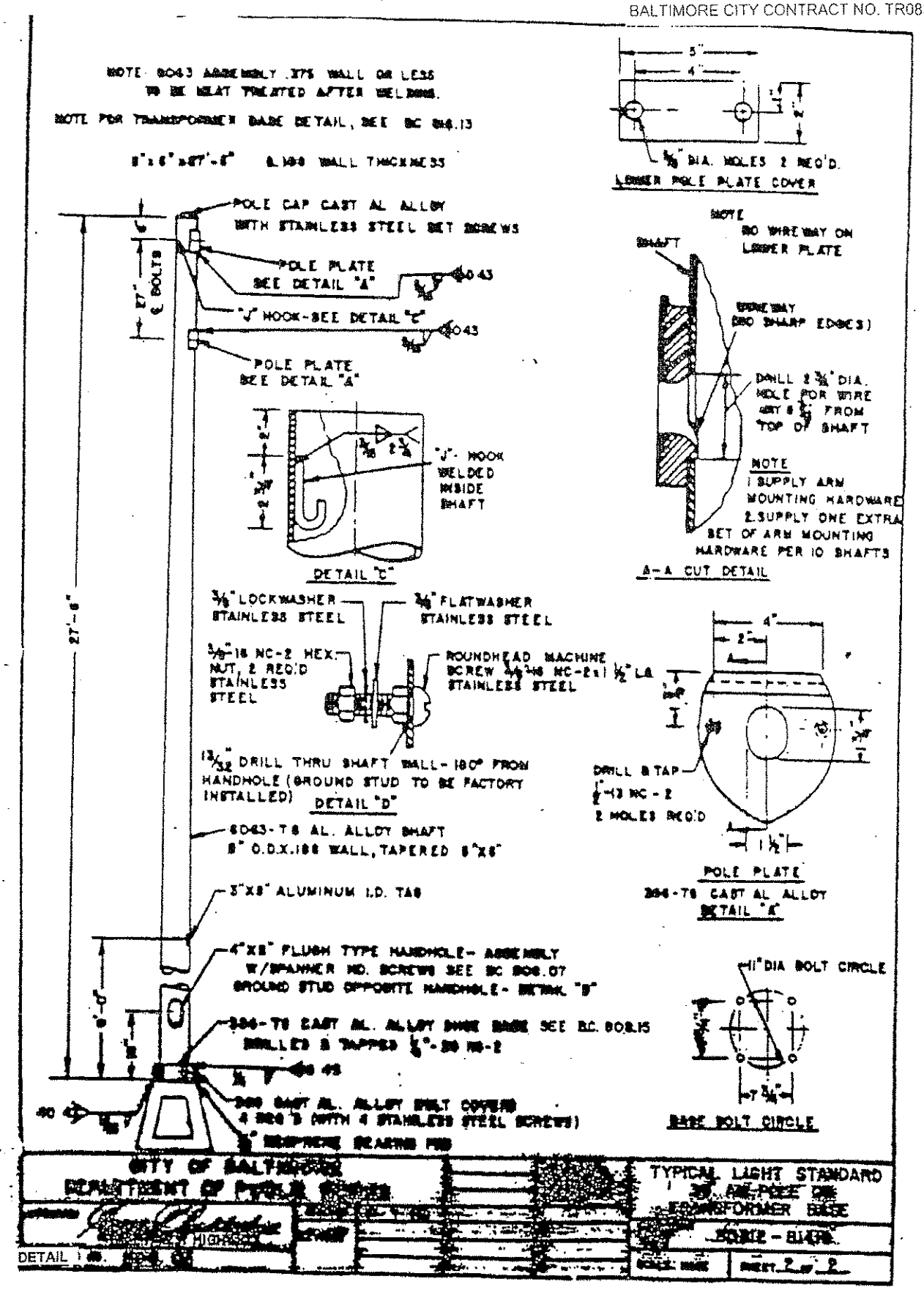
NOTE 6063 ASSEMBLY .375 WALL OR LESS TO BE HEAT TREATED AFTER WELDING.
NOTE FOR TRANSFORMER BASE DETAIL, SEE BC 816.13
8"x6"x27'-6" 0.188 WALL THICKNESS
POLE CAP CAST AL ALLOY WITH STAINLESS STEEL SET SCREWS
POLE PLATE SEE DETAIL "A"
"J" HOOK-SEE DETAIL "C"
POLE PLATE SEE DETAIL "A"
27'-6"
"J"- HOOK WELDED INSIDE SHAFT
DETAIL "C"
3/8" LOCKWASHER STAINLESS STEEL
3/8" FLATWASHER STAINLESS STEEL
3/8"-16 NC-2 HEX. NUT, 2 REQ'D STAINLESS STEEL
ROUNDHEAD MACHINE SCREW 3/8"-16 NC-2 x 1 1/2" LG STAINLESS STEEL
13/32" DRILL THRU SHAFT WALL-180° FROM HANDHOLE (GROUND STUD TO BE FACTORY INSTALLED)
DETAIL "D"
6063-T6 AL. ALLOY SHAFT 8" O.D.X.188 WALL, TAPERED 8"X6"
3"X8" ALUMINUM I.D. TAG
4"X8" FLUSH TYPE HANDHOLE- ASSEMBLY W/SPANNER HD. SCREWS SEE BC 806.07 GROUND STUD OPPOSITE HANDHOLE- DETAIL "D"
6'-0"
CAST AL. ALLOY SHOE BASE SEE BC 808.15
CAST AL. ALLOY BOLT COVERS 4 REQ'D (WITH 4 STAINLESS STEEL SCREWS)
NEOPRENE BEARING PAD
5"
4"
3/8" DIA. HOLES 2 REQ'D.
LOWER POLE PLATE COVER
NOTE NO WIREWAY ON LOWER PLATE
SHAFT
WIREWAY (NO SHARP EDGES)
DRILL 2 3/4" DIA. HOLE FOR WIRE
FROM TOP OF SHAFT
NOTE
1. SUPPLY ARM MOUNTING HARDWARE
2. SUPPLY ONE EXTRA SET OF ARM MOUNTING HARDWARE PER 10 SHAFTS
A-A CUT DETAIL
4"
2"
DRILL & TAP 1/2"-13 NC-2 2 HOLES REQ'D
1 1/2"
POLE PLATE
CAST AL ALLOY
DETAIL "A"
11" DIA BOLT CIRCLE
7 3/4"
BASE BOLT CIRCLE
CITY OF BALTIMORE
DEPARTMENT OF PUBLIC WORKS
TYPICAL LIGHT STANDARD
AM POLE ON TRANSFORMER BASE
DETAIL
SHEET 2 OF 2

CHART
No. 30AW

ALUMINUM WITHOUT TRANSFORMER BASE

BRACKET - ARM TYPE & SPREAD	SHAFT & SIZE WALL THICKNESS	LUMINAIRE MOUNTING HEIGHT	LUMINAIRE MAX. WT. & PROJECTED AREA	
6 FT. SINGLE TAPERED ARM	8.0"x 4.5"x 27'-6" 0.188"	30'— NOM.	71 LBS.	3.2 SQ. FT.
8 FT. SINGLE TAPERED ARM	8.0"x 4.5"x 27'-6" 0.188"	"	52 LBS.	"
10 FT. "A" FRAME	8.0"x 4.5"x 27'-6" 0.188"	"	75 LBS.	"
12 FT. "A" FRAME	8.0"x 6.0"x 27'-6" 0.188"	"	75 LBS.	"
15 FT. "A" FRAME	8.0" 6.0" 27'-6" 0.188"	"	62 LBS.	2.2 SQ. FT.
18 FT. "A" FRAME	SPECIAL DESIGN			
20 FT. "A" FRAME				

CHART
No. 30AT

ALUMINUM WITH TRANSFORMER BASE

BRACKET - ARM TYPE & SPREAD	SHAFT & SIZE WALL THICKNESS	LUMINAIRE MOUNTING HEIGHT	LUMINAIRE MAX. WT. & PROJECTED AREA	
6 FT. SINGLE TAPERED ARM	8.0"x 4.5"x 25'-10" 0.188"	30'— NOM.	71 LBS.	3.2 SQ. FT.
8 FT. SINGLE TAPERED ARM	8.0"x 4.5"x 25'-10" 0.188"	30'— NOM.	52 LBS.	"
10 FT. "A" FRAME	8.0"x 4.5"x 25'-10" 0.188"	30'— NOM.	75 LBS.	"
12 FT. "A" FRAME	8.0"x 6"x 25'-10" 0.188"	30'— NOM.	75 LBS.	"
15 FT. "A" FRAME	8.0"x 6"x 25-10" 0.188"	30'— NOM.	62 LBS.	2.2 SQ.FT.
18 FT. "A" FRAME	SPECIAL DESIGN			
20 FT. "A" FRAME				

CITY OF BALTIMORE DEPARTMENT OF PUBLIC WORKS			FHWA WASHINGTON OFFICE	TYPICAL LIGHT STANDARDS ALUMINUM POLE DIMENSIONS	
APPROVED: C. E. [illegible] HEAD, BUREAU OF ENGINEERING	ISSUED	2-8-71	8/18/72	CATEGORY CODE 80812 Thru 81418	
	REVISED	12-9-71	7/19/73		
		4-28-72			
DETAIL NO. BC 808.04				SCALE: NONE	SHEET 1 OF 1

F.A.P. NO STP-3057 (4)N
SHA CONTRACT NO: BC320-001-815
BALTIMORE CITY CONTRACT NO. TR08310

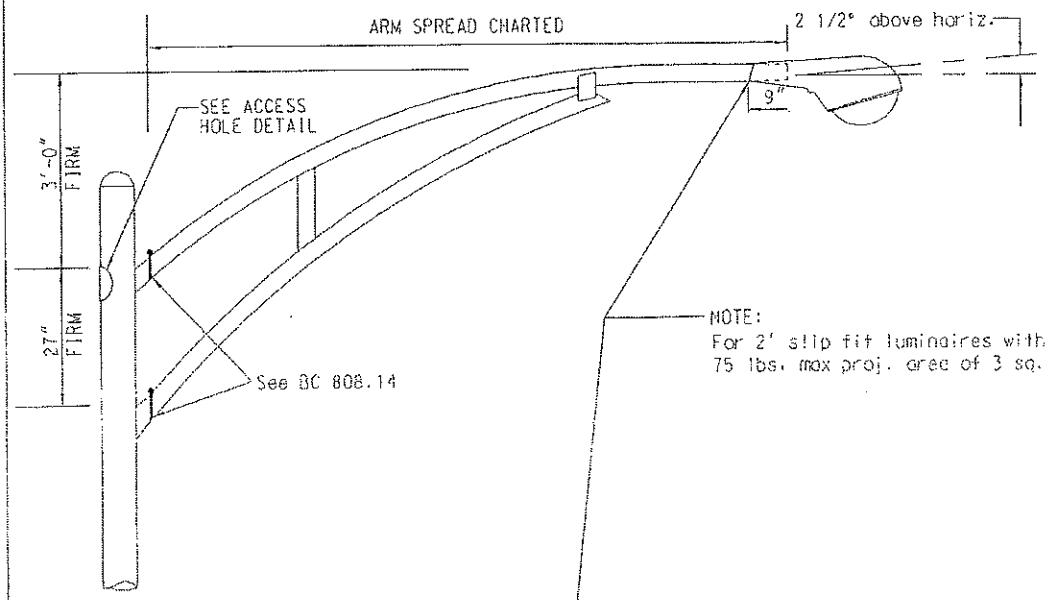

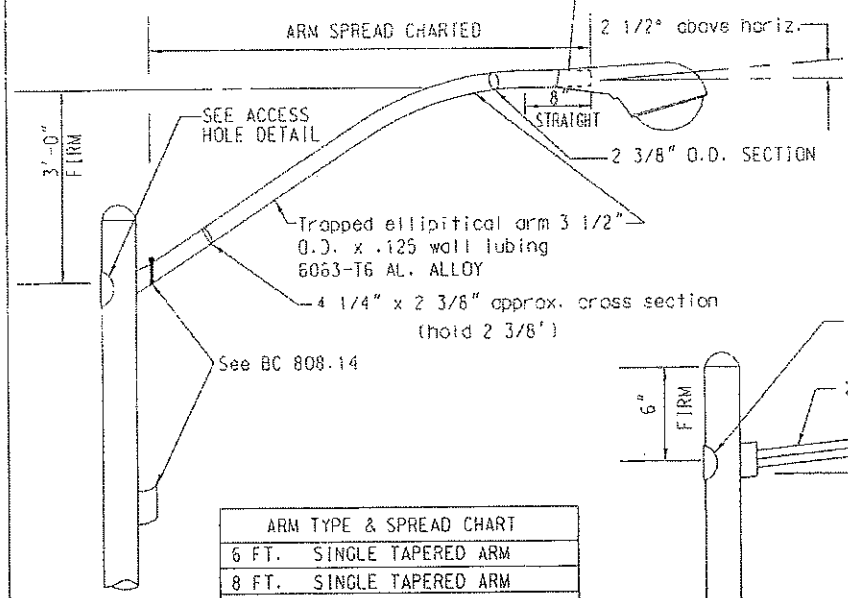

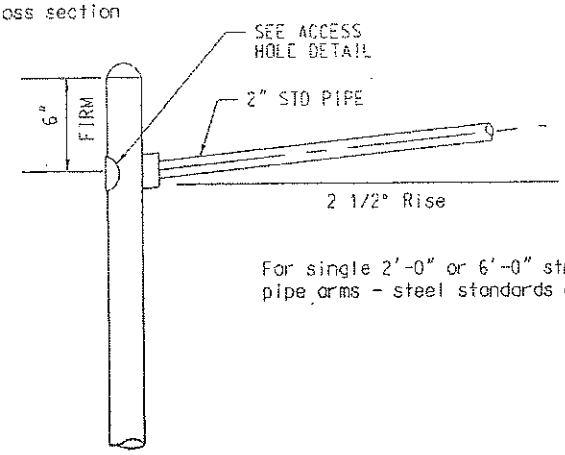

For single 2'-0" or 6'-0" straight pipe arms - steel standards only

ARM TYPE & SPREAD CHART	
6 FT.	SINGLE TAPERED ARM
8 FT.	SINGLE TAPERED ARM
10 FT.	"A" FRAME
12 FT.	"A" FRAME
15 FT.	"A" FRAME
18 FT.	"A" FRAME SPECIAL DESIGN
20 FT.	"A" FRAME SPECIAL DESIGN

CHARLES CENTER POLES ONLY

CAD FILE: BTL-ARM.dwg

CITY OF BALTIMORE DEPARTMENT OF TRANSPORTATION			FHWA WASHINGTON OFFICE	TYPICAL POLE ARMS FOR 25', 28' & 30' POLES
APPROVED: _____	ISSUED	8-5-93		CATEGORY CODE:
	REVISED	8-16-93		SCALE: NONE / SHEET 1 OF 1
DETAIL NO. 808.04				

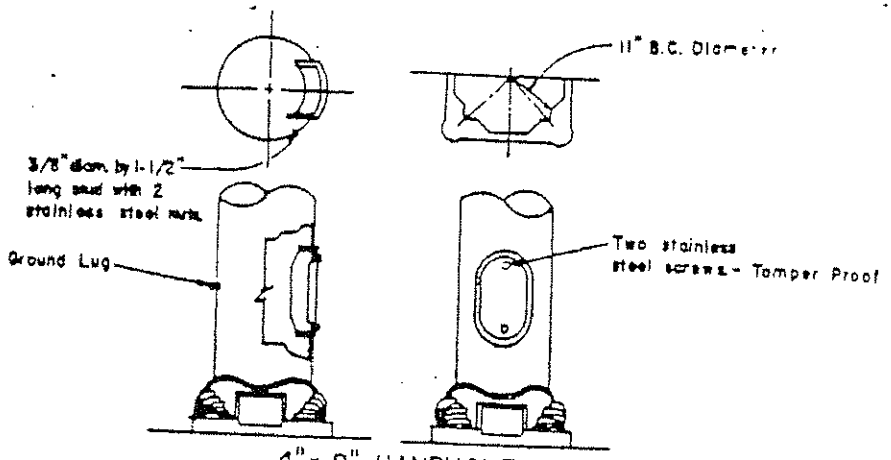

4" x 8" HANDHOLE

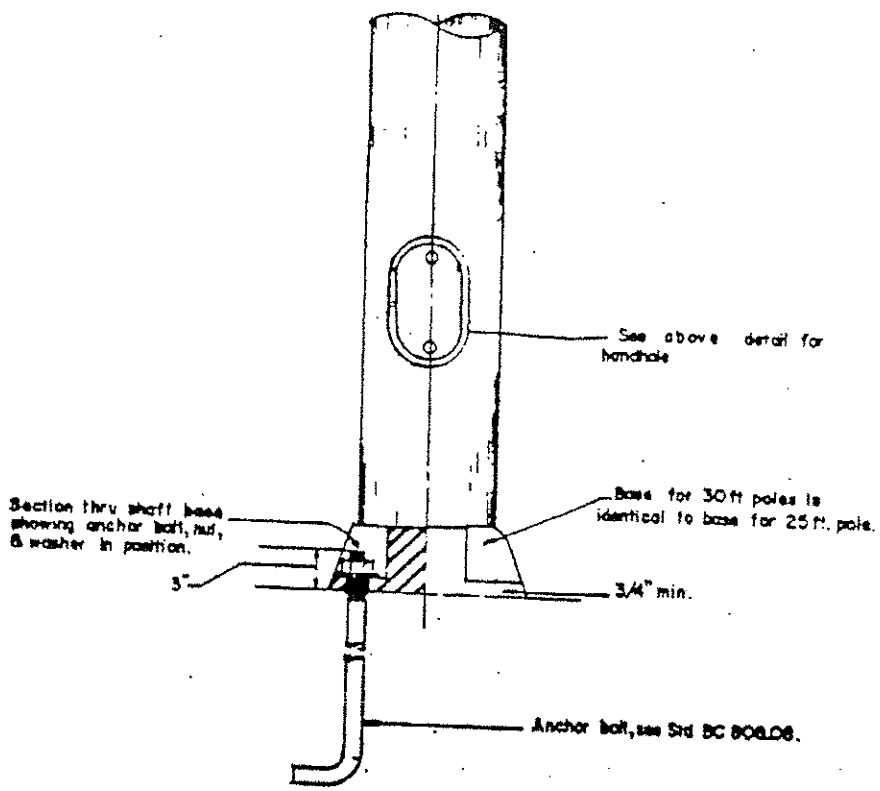

DETAILS OF ANCHOR BOLT IN PLACE

CITY OF BALTIMORE DEPARTMENT OF PUBLIC WORKS			FHWA WASHINGTON OFFICE	LIGHTING STANDARD MISC. DETAILS
APPROVED: [signature] HEAD, BUREAU OF ENGINEERING	ISSUED	2-9-71	2-19-71	
	REVISED	4-25-72	8/18/72	CATEGORY CODE 80812 Thru 81418
DETAIL NO. BC 808.07		10-7-86		SCALE: NONE — SHEET 1 OF 1

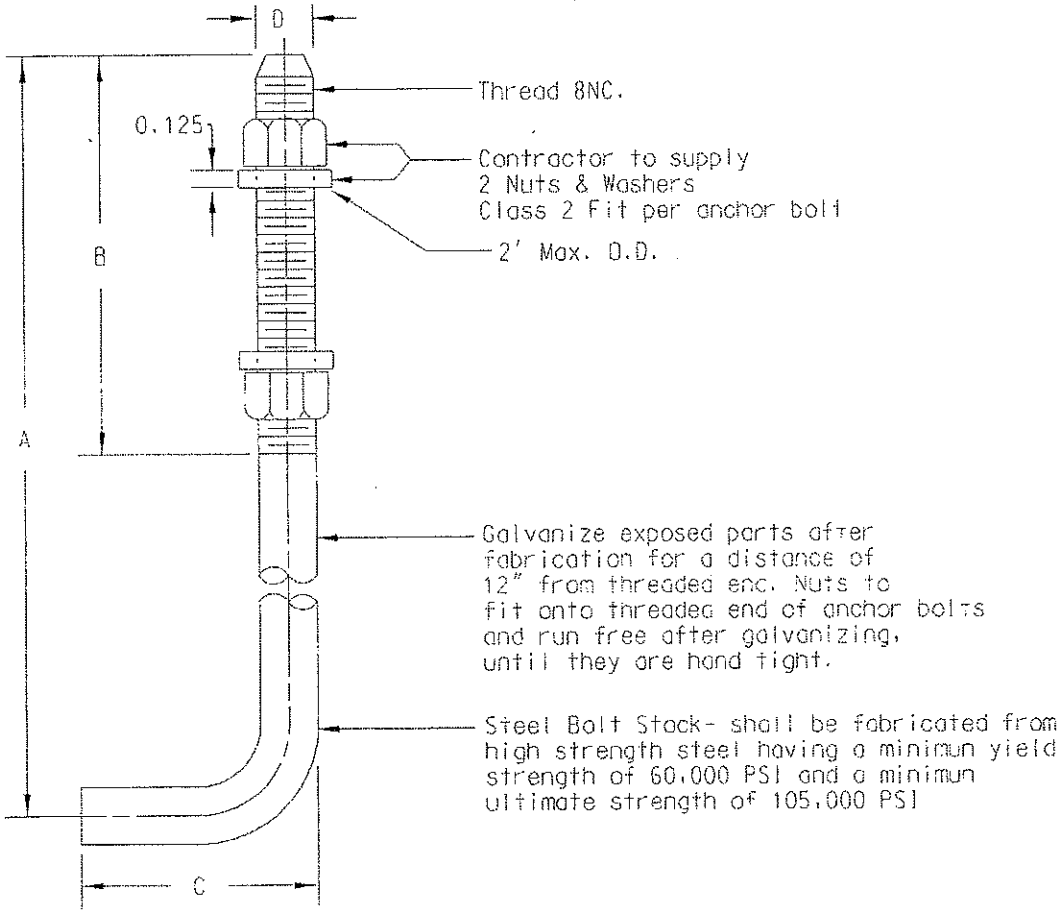

Anchor nuts, bolts, and washers shall be hot-dipped galvanized in accordance with ASTM A153. Nuts and washers shall meet the Physical and Chemical Requirements of ASTM A 307.

DIMENSION SCHEDULE

	STRAIN POLE MAST ARM POLE	INNER HARBOR TYPE LIGHT POLE	STANDARD LIGHT POLE	PEDESTRIAN POLE PUSH BUTTON POLE	BASE MOUNTED CONTROL CABINET
A	60"	48"	40"	Per MDSHA 801.01-01	16"
B	9"	6"	6"		3"
C	6"	4"	4"		3"
D	* 1 1/2"	1 1/4"	1"		3/4"

* Anchor bolts for 32' strain Pole shall be 1 3/4" in diameter.

CAD FILE: DTL-001.dwg

CITY OF BALTIMORE DEPARTMENT OF TRANSPORTATION			FHWA WASHINGTON OFFICE	STANDARD ANCHOR BOLTS
APPROVED:	ISSUED			CATEGORY CODE:
	REVISED	8-5-93		
		10-20-93		SCALE: NONE / SHEET 1 OF 1
DETAIL NO. 808.08				

F.A.P. NO STP-3057 (4)N
SHA CONTRACT NO: BC320-001-815
BALTIMORE CITY CONTRACT NO. TR08310

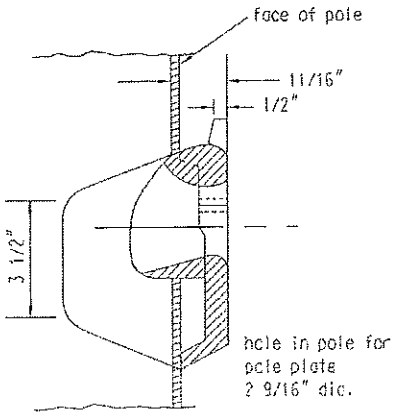

SECTION THRU POLE PLATE

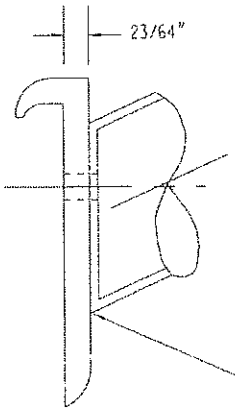

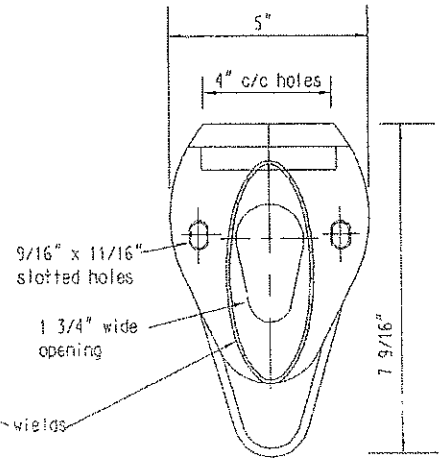

TAPERED ARM CONNECTION

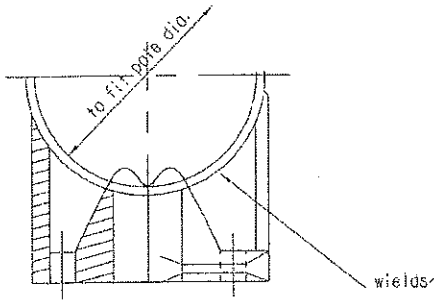

TOP VIEW OF POLE PLATE

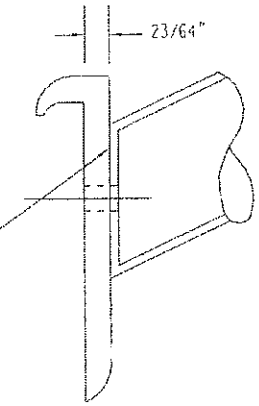

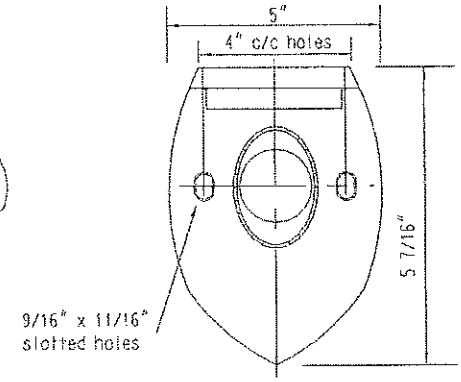

PIPE ARM CONNECTION

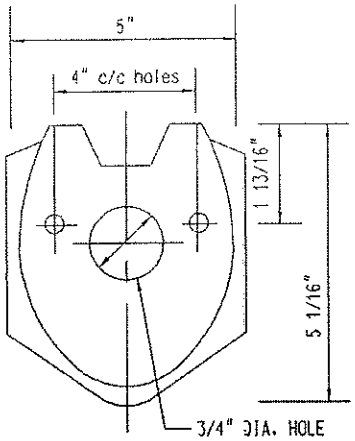

FRONT VIEW OF POLE PLATE

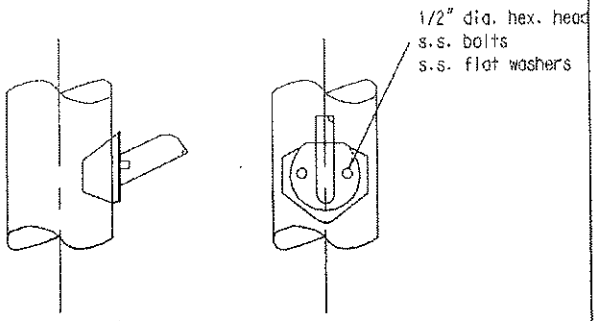

ASSEMBLED VIEW

CAD FILE: DTL-aLum.dwg

CITY OF BALTIMORE DEPARTMENT OF TRANSPORTATION			FHWA WASHINGTON OFFICE	TYPICAL POLE AND ARM PLATE CONSTRUCTION
APPROVED: _____	ISSUED		4-24-78	CATEGORY CODE:
	REVISED	4-12-78	7-5-76	
		6-14-78		
DETAIL NO. 808.14		7-27-82		SCALE: NONE / SHEET 1 OF 1

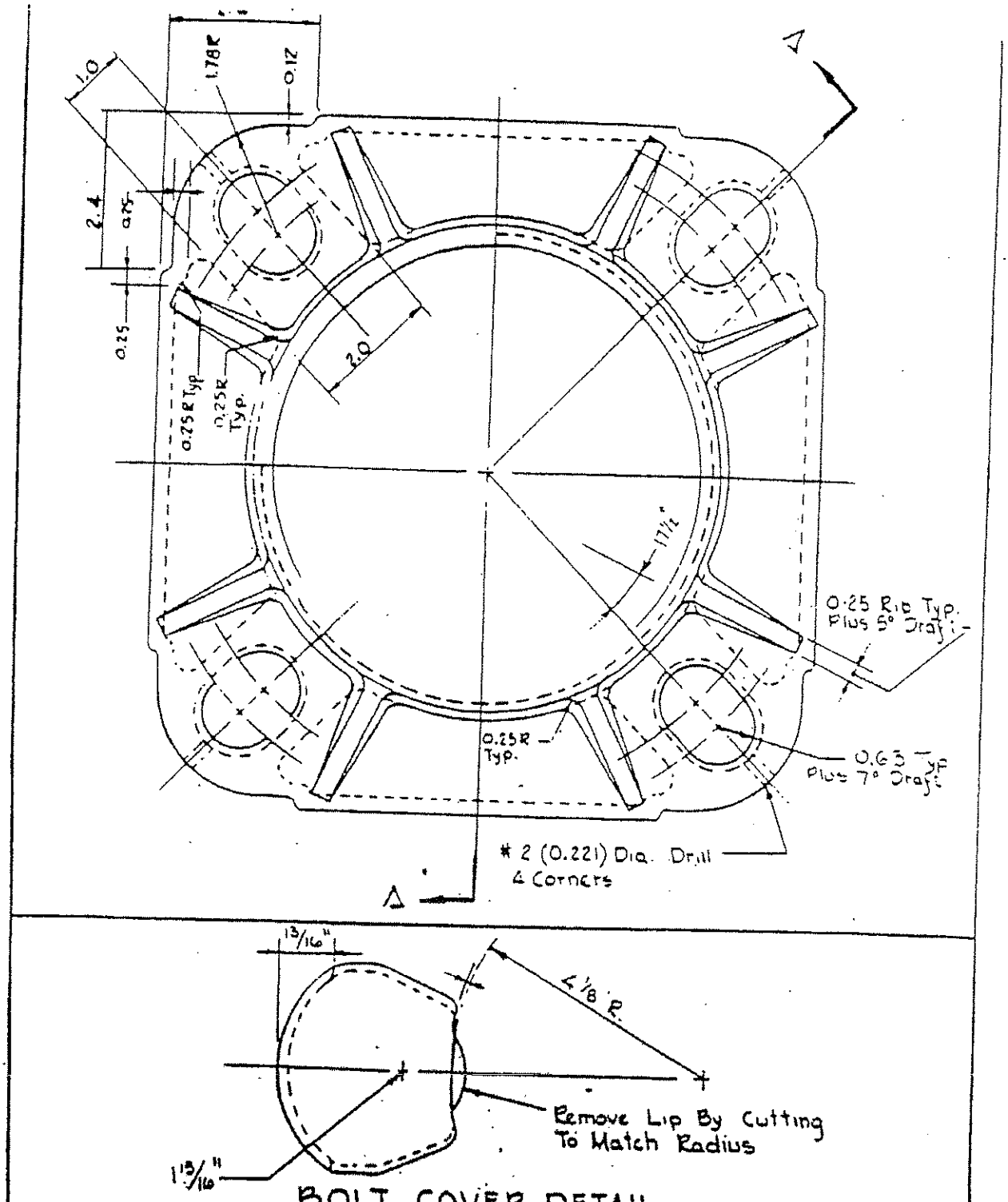

BOLT COVER DETAIL

CITY OF BALTIMORE DEPARTMENT OF PUBLIC WORKS		FHWA	BASE PLATE FOR 11'-6", 25' & 30' POLES DETAILS OF BOLT COVER
APPROVED	DRAWN 10-7-86		
DETAIL NO. B.C. 808.15	REVISED		SCALE NONE — SHEET 1 OF 2

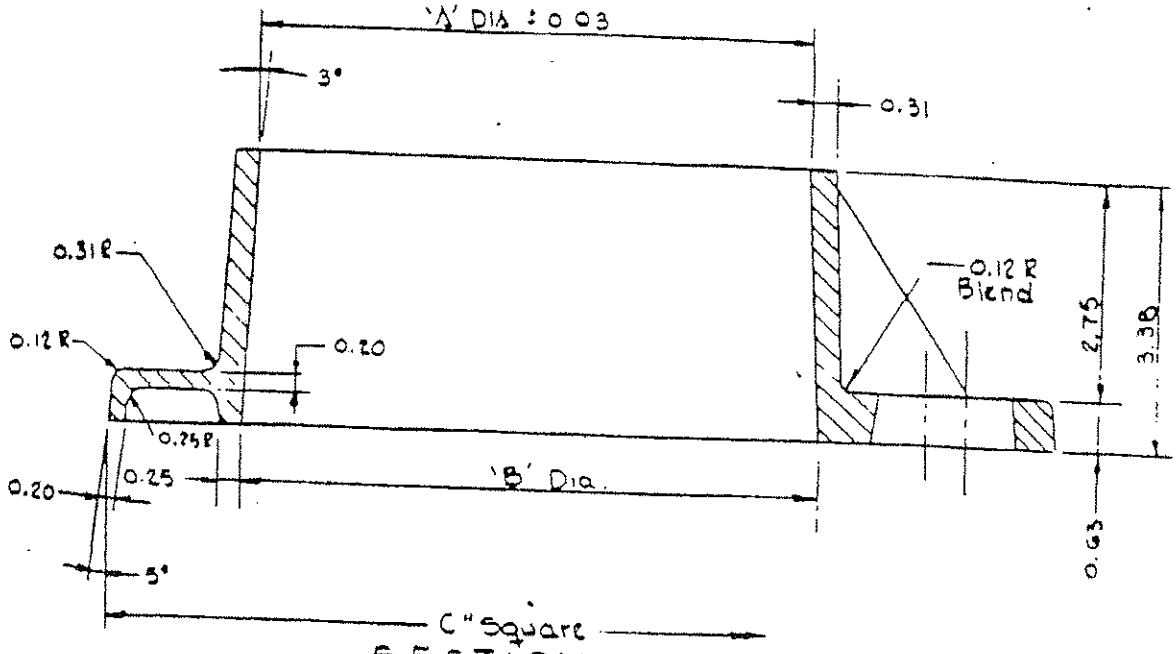

SECTION A-A

	'A' Dimension	'B' Dimension	'C' Dimension
11'-6" Pole	7.05	7.404	11" Square
25' Pole	8.05	8.404	12" Square
30' Pole	8.05	8.404	12" Square

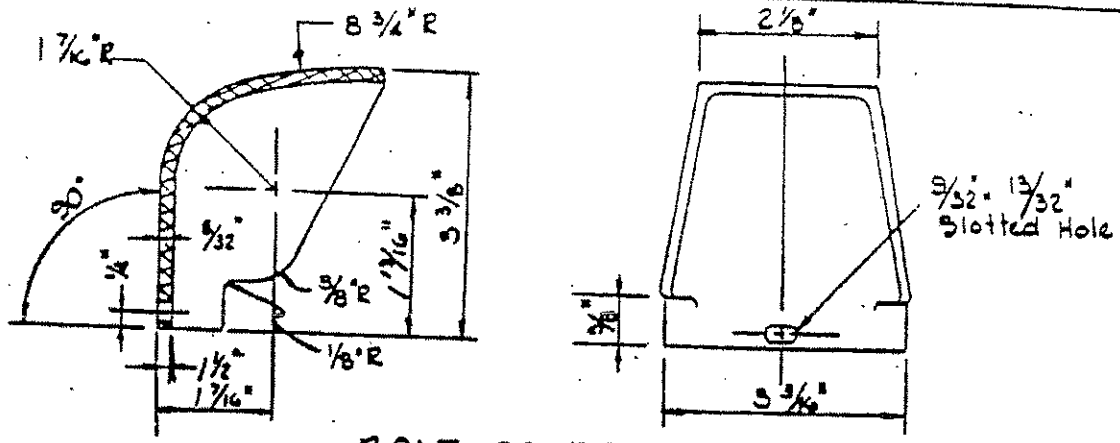

BOLT COVER DETAILS

CITY OF BALTIMORE DEPARTMENT OF PUBLIC WORKS		FHWA	BASE PLATE FOR 11'-6", 25' & 30' POLES DETAILS OF BOLT COVER
DETAIL NO. B.C. 808.15	10-7-86		SHEET 2 of 2

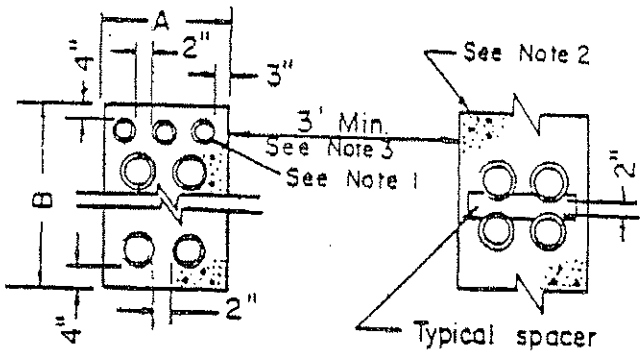

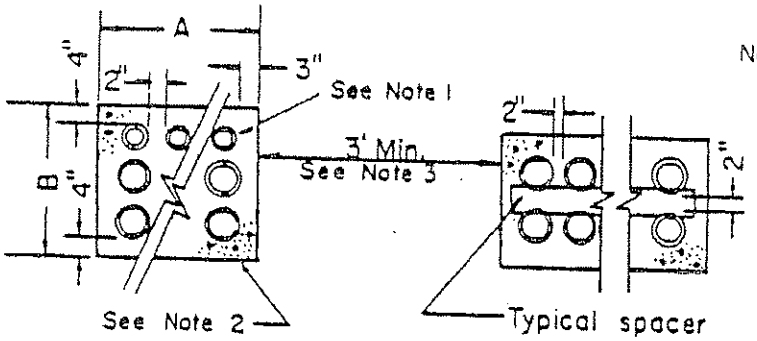

Note 1: 3-3" ducts to be included in the duct section where indicated on plans.

Note 2 All concrete shall be mix 1.

Note 3: This dimension shall apply when conduits are installed in parallel systems.

Note 4: Typical spacers shall be placed at each joint and every five (5) feet thereafter.

FOR 5" DUCT

CAT. CODE	TYPE	A	B	H	W
82430	X	1'-8"	1'-2"	1	2
82417	O	1'-8"	1'-10"	2	2
82415	M	1'-8"	2'-6"	3	2
82426	R	1'-8"	3'-2"	4	2
82410	H	1'-8"	3'-10"	5	2
82416	N	2'-4"	1'-10"	2	3
82414	L	3'-0"	1'-10"	2	4
82411	I	3'-8"	1'-10"	2	5
82433	Y	1'-0"	1'-2"	1	1

FOR 3" DUCT

CAT CODE	TYPE	A	B	H	W
82435	Y	10"	1'-0"	1	1
82432	X	1'-4"	1'-0"	1	2
82422	P	1'-10"	1-0"	1	3

Supercedes previous DETAILS B.C. 824.01
B.C. 824.02
B.C. 824.03
B.C. 824.04

CITY OF BALTIMORE DEPARTMENT OF PUBLIC WORKS			FHWA WASHINGTON OFFICE	STANDARD DUCT SECTIONS
APPROVED William E. Rice, CHIEF, BUREAU OF ENGINEERING	ISSUED	9-13-78	9-20-78	CATEGORY
	REVISED	10-31-80		BOOK See Above
DETAIL B.C. 824.01				SCALE: NONE SHEET 1 OF 1

F.A.P. NO STP-3057 (4)N
SHA CONTRACT NO: BC320-001-815
BALTIMORE CITY CONTRACT NO. TR08310

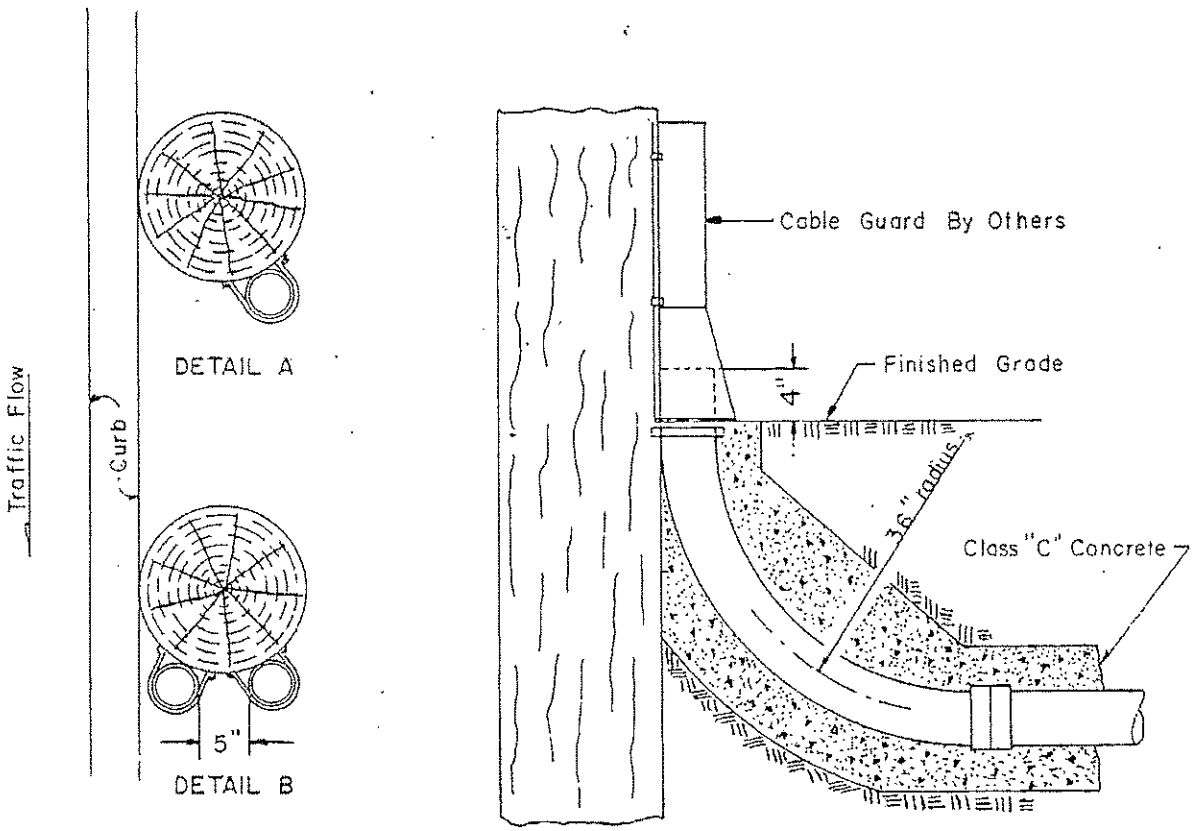

Install duct bends away from traffic flow if possible and inside curbside tangent to pole. See details A and B.

CITY OF BALTIMORE DEPARTMENT OF PUBLIC WORKS			FHWA WASHINGTON OFFICE	CONDUIT POLE CONNECTION SINGLE & DOUBLE
APPROVED HEAD, BUREAU OF ENGINEERING	ISSUED REVISED	5-1-70 7-27-77		CATEGORY CODE 82420-82435
DETAIL NO. BC 824.05				SCALE: NONE SHEET 1 OF 1

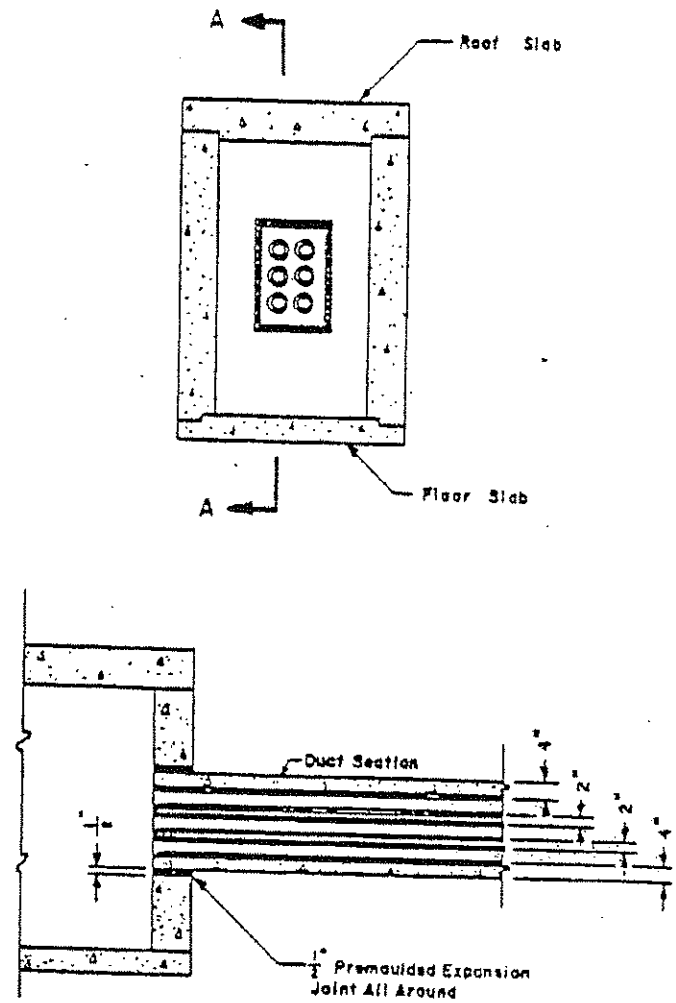

SECTION A – A

CITY OF BALTIMORE DEPARTMENT OF PUBLIC WORKS			BUREAU OF PUBLIC ROADS		DUCT ENTRANCE INTO MANHOLE
APPROVED: [signature] HEAD, BUREAU OF ENGINEERING	ISSUED	5-1-70	MARYLAND DIVISION	WASHINGTON OFFICE 9-15-70	
DETAIL NO. BC 824 .06	REVISED				CATEGORY CODE 82401,02,04,06-2B
					SCALE: NONE SHEET 1 OF 1

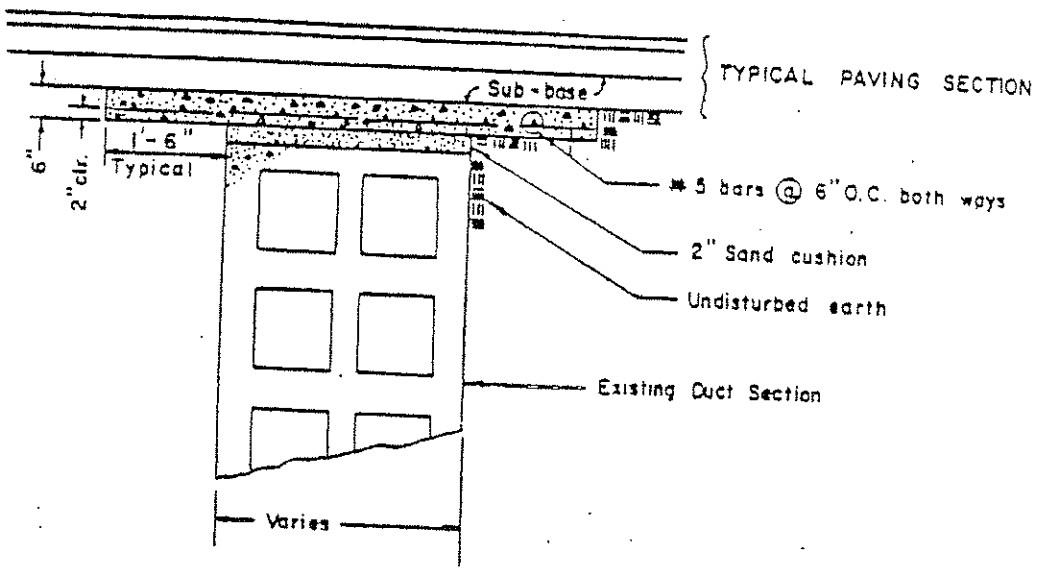

ALL CONCRETE TO BE MIX 3 ALL REINFORCING STEEL TO CONFORM TO A.S.T.M. 615, GRADE 40.

CITY OF BALTIMORE DEPARTMENT OF PUBLIC WORKS		FHWA WASHINGTON DIV OFFICE 3-21-78	REINFORCING SLAB FOR SHALLOW ELECTRIC DUCT
APPROVED [signature] HEAD, BUREAU OF ENGINEERING	ISSUED 1-31-79		CATEGORY CODE 82401-82435
DETAIL NO. B C. 824.08	REVISED		SCALE: NONE SHEET 1 OF 1

F.A.P. NO STP-3057 (4)N
SHA CONTRACT NO: BC320-001-815
BALTIMORE CITY CONTRACT NO. TR08310

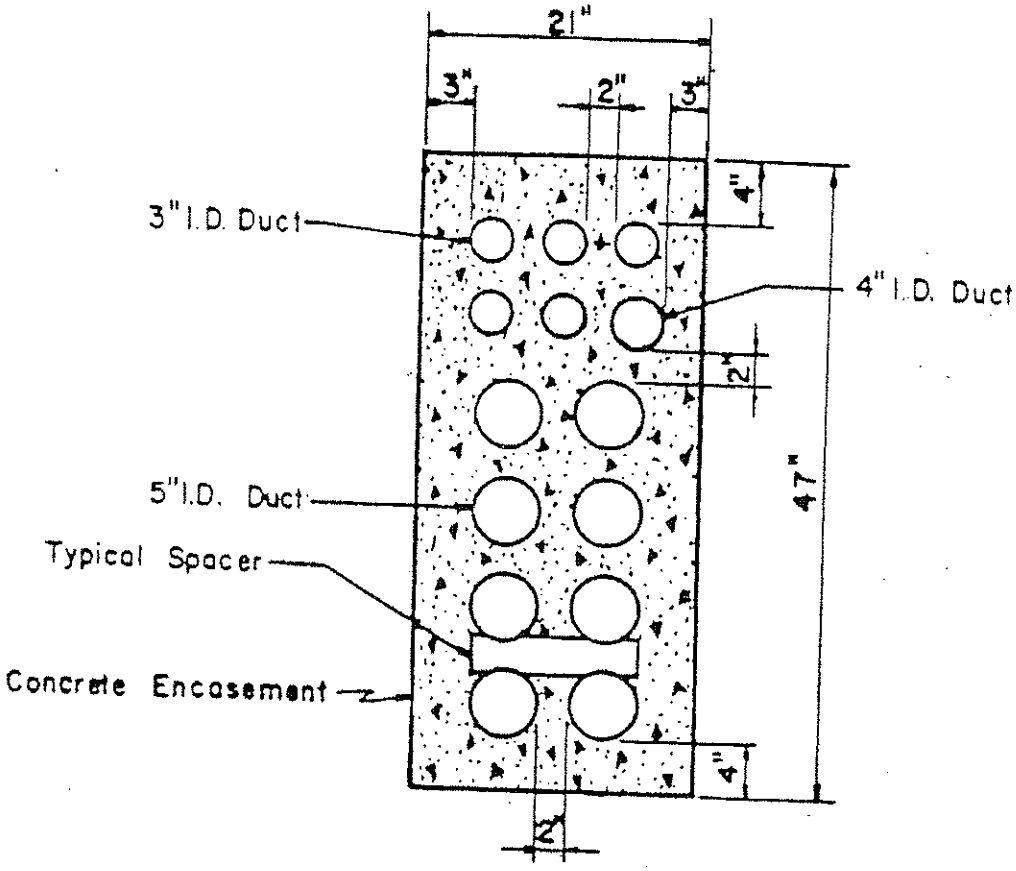

CITY OF BALTIMORE DEPARTMENT OF PUBLIC WORKS		FHWA	TYPICAL SECTION 8-5", 5-3" & 1-4"
APPROVED [signature] DIRECTOR OF HIGHWAYS	DRAWN 10-7-86		CATEGORY
DETAIL NO. 824.09	REVISED		SCALE: NONE SHEET 1 OF 1

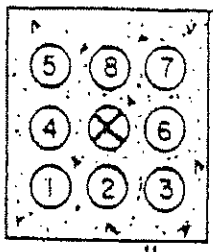

8-5"
TRANSITION SECTION

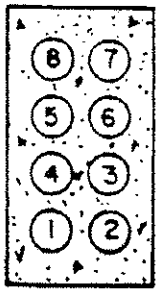

TYPICAL 8-5" DUCT SECTION
(2W x 4H)

CITY OF BALTIMORE DEPARTMENT OF PUBLIC WORKS			FHWA	DUCT TRANSITION TO PRECAST RECESSED EXTENSION
[redacted]	[redacted]	10-7-[redacted]		CATEGORY [redacted]
DETAIL [redacted] 24.10				SCALE: [redacted] SHEET 1 OF 1

F.A.P. NO STP-3057 (4)N
SHA CONTRACT NO: BC320-001-815
BALTIMORE CITY CONTRACT NO. TR08310

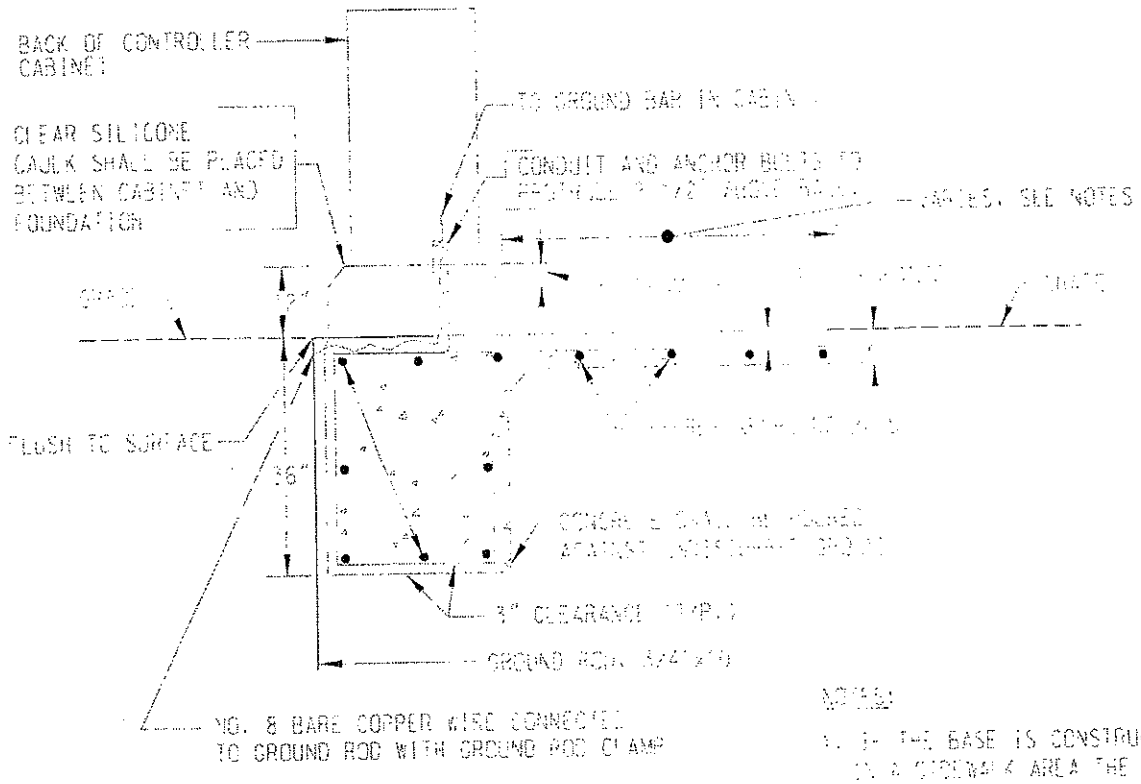

NOTES:

1. IF THE BASE IS CONSTRUCTED IN A SIDEWALK AREA THE PAD IS OMITTED.
2. OUTSIDE OF SIDEWALK AREAS THE PAD SHALL BE ONE INCH ABOVE GRADE WITH A ONE INCH CHAMFER.
3. RE-INFORCING SHALL BE #5 BARS WITH #4 TIES SPACED 12" APART.
4. FOR CONDUIT ELBOWS SEE CABINET LAYOUT DETAILS.
5. FOR PAD DIMENSIONS SEE CABINET LAYOUT DETAILS.

CAD FILE: DTL-014.dwg

CITY OF BALTIMORE DEPARTMENT OF TRANSPORTATION			FHWA WASHINGTON OFFICE	BALTIMORE CITY CABINET FOUNDATION BASE
APPROVED:	ISSUED			CATEGORY CODE:
	REVISED			SCALE: NONE / SHEET 1 OF 1
DETAIL NO.				

F.A.P. NO STP-3057 (4)N
SHA CONTRACT NO: BC320-001-815
BALTIMORE CITY CONTRACT NO. TR08310

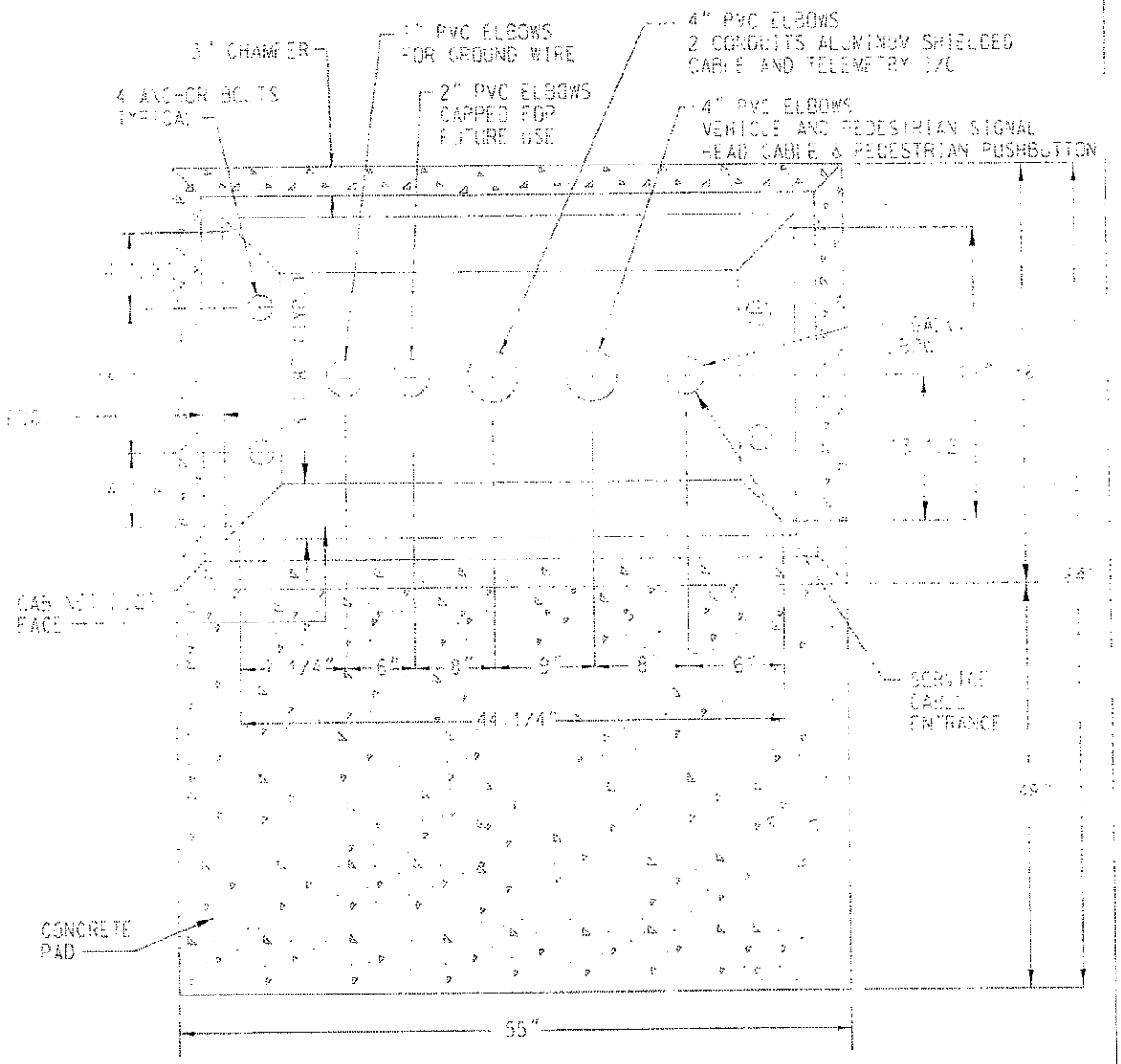

NOTE:
1. ELBOWS AND ANCHOR BOLTS TO PROJECT ABOVE BASE 2" + 1/2"
2. MATCH ANCHOR BOLT PATTERN TO CABINET PROVIDED

CAD FILE: DTL-036.dwg

CITY OF BALTIMORE DEPARTMENT OF TRANSPORTATION		FHWA WASHINGTON OFFICE	DEPARTMENT OF TRANSPORTATION C-TYPE BASE MOUNTED CABINET LAYOUT
APPROVED: _____	ISSUED REVISED		CATEGORY CODE:
DETAIL NO.			SCALE: NONE / SHEET 1 OF 1

NOTES ON HANDBOX CONSTRUCTION

1. ANY SPACES BETWEEN THE CONDUIT AND THE HANDBOX WALL SHALL BE PATCHED WITH MORTAR AS APPROVED BY THE ENGINEER.
2. ALL METAL CONDUIT ENDS SHALL BE BONDED WITH OTHER CONDUIT ENDS USING BONDING BUSHINGS AND NO. 8 AWG SOLID BORE COPPER WIRE.
3. ALL ELECTRICAL CABLES ARE REQUIRED TO HAVE 3' MIN. SLACK IN HANDBOX. THIS WIRE IS TO BE SECURED IN THE HANDBOX SO IT DOES NOT LIE ON THE BOTTOM OF THE HANDBOX.
4. ALL LOOP DETECTOR WIRE TO LEAD-IN CABLE SPLICES IN THE HANDBOX SHALL BE IN ACCORDANCE WITH THE STANDARD SHOWN ON STANDARD NO. 2.
5. WHEN ALL CONDUIT AND ELECTRICAL WIRE IS IN PLACE, THE END OF THE CONDUIT SHALL BE SEALED WITH DUCT SEALER OR OTHER PLIABLE MATERIAL AS APPROVED BY THE ENGINEER.
6. ALTERNATE HAND BUILT BRICK HANDBOX SHALL BE USED FOR CONDUIT SIZES LARGER THAN 3" AS DIRECTED BY THE ENGINEER.
7. HANDBOX FRAME & COVER SHALL BE GALVANIZED PER ASTM A-123 & A-153.
8. HANDBOX TO BE INSTALLED AT FINAL GRADE.
9. HANDBOX FRAME TO BE PLACED INTO MORTAR BED ON HANDBOX TOP AND PARGED.
10. ALL CONDUITS ENTERING FROM HANDBOX SUMP INTO HANDBOX SHALL PROJECT 6" ABOVE SUMP TOP.
11. ALL CONDUIT ENTERING FROM HANDBOX SIDE WALL SHALL PROJECT 2" MAX.

CAD FILE: DTL-040.dwg

CITY OF BALTIMORE DEPARTMENT OF TRANSPORTATION			FHWA WASHINGTON OFFICE	DEPARTMENT OF TRANSPORTATION NOTES ON HANDBOX CONSTRUCTION TRAFFIC
APPROVED: _____	ISSUED			CATEGORY CODE:
	REVISED			SCALE: NONE / SHEET 1 OF 1
DETAIL I NO.				

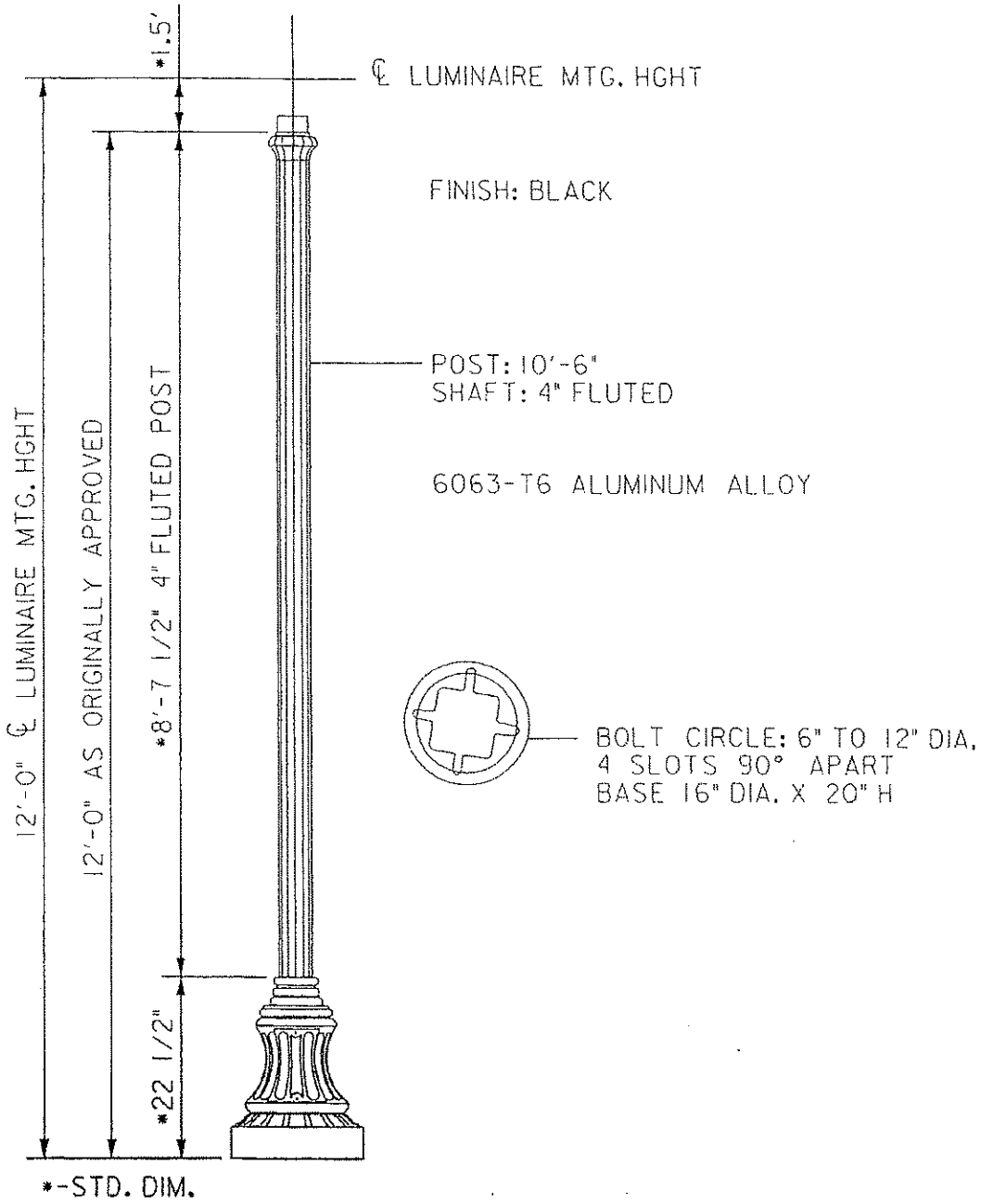

CAD FILE: HOMELPOL.dwg

CITY OF BALTIMORE DEPARTMENT OF PUBLIC WORKS				FHWA WASHINGTON OFFICE	HOMELAND STREET LIGHT POLE
APPROVED: _____	ISSUED				CATEGORY CODE:
	REVISED	8-5-93 10-20-93			
DETAIL NO.					SCALE: NONE / SHEET 1 OF 1

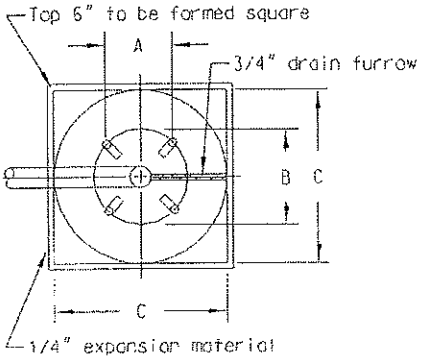

NOTES:

1. The base excavation for Strain Poles and Mast arm poles may be augered with a 3 foot diameter auger provided the top six inches of the base are blocked square.
2. Standard PVC conduit elbow encased in concrete.
3. Where foundations are constructed outside of sidewalk areas, the top of the foundation shall be constructed to an elevation one inch shall be formed around the out side edge. above the finished grade and a one inch chamfer shall be formed around the out side edge.
4. Block out new base with a 1/4 inch expansion materic (see B.C. 655.01)
5. Poles to be six feet back of face of curb unless otherwise noted.
6. For anchor bolt dimensions refer to standard traffic anchor bolts detail.
7. The top of all anchor bolts are to be level.
8. Grounds shall be carried to ground rod in traffic handbox.

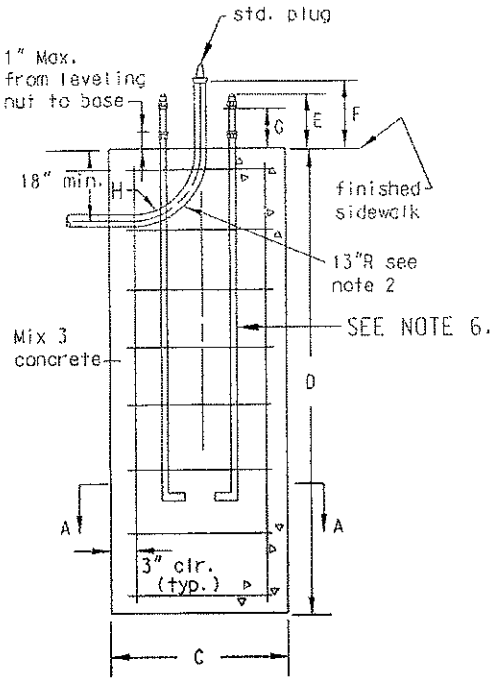

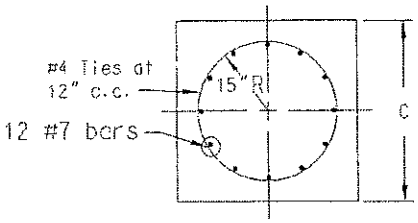

SECTION A-A

DIMENSION	DIMENSION SCHEDULE			
	PEDESTAL AND PUSH BUTTON BASE	STRAIN POLE	MAST ARM POLE	INNER HARBOR POLE
A	Per MDSHA 801.01-01	10 5/8"	14 1/8"	14 1/8"
B		15"	20"	20"
C		36"	36"	36"
D		9'- 6"	9'- 6"	9'- 6"
E		7 1/2"	7 1/2"	6 1/2"
F		8"	8"	8"
G		6"	6"	8"
H		4"	4"	4"

CAD FILE: DTL-002.dwg

CITY OF BALTIMORE DEPARTMENT OF PUBLIC WORKS			FHWA WASHINGTON OFFICE	POLE, POST AND PEDESTAL FOUNDATION DETAILS - TRAFFIC
APPROVED:	ISSUED	8-5-93		CATEGORY CODE:
	REVISED	10-20-93		
DETAIL NO.		11-1-95		SCALE: NONE / SHEET 1 OF 1

F.A.P. NO STP-3057 (4)N
SHA CONTRACT NO: BC320-001-815
BALTIMORE CITY CONTRACT NO. TR08310

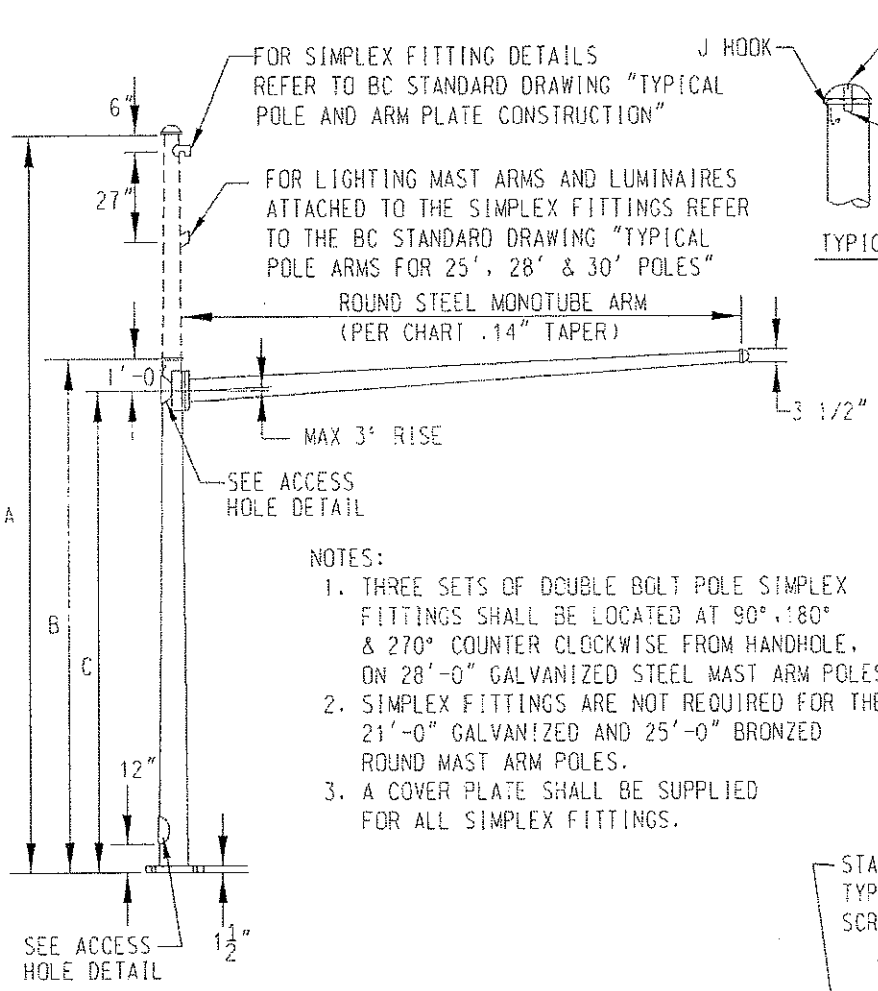

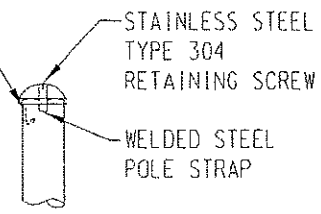

TYPICAL CAP DETAIL

NOTES:

1. THREE SETS OF DOUBLE BOLT POLE SIMPLEX FITTINGS SHALL BE LOCATED AT 90°, 180° & 270° COUNTER CLOCKWISE FROM HANDHOLE, ON 28'-0" GALVANIZED STEEL MAST ARM POLES.
2. SIMPLEX FITTINGS ARE NOT REQUIRED FOR THE 21'-0" GALVANIZED AND 25'-0" BRONZED ROUND MAST ARM POLES.
3. A COVER PLATE SHALL BE SUPPLIED FOR ALL SIMPLEX FITTINGS.

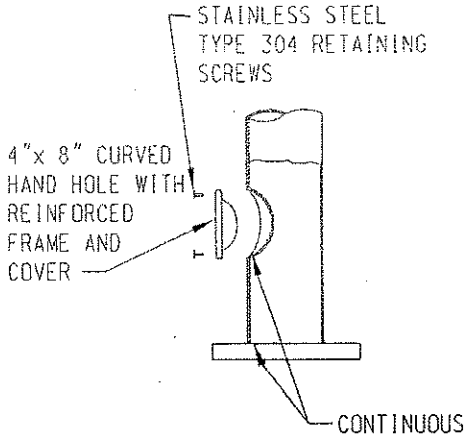

ACCESS HOLE DETAIL

ROUND STEEL MAST ARM POLES

DIMENSION SCHEDULE			
	(21 FEET) GALVANIZED	(28 FEET) GALVANIZED	(25 FEET) BRONZED
A	NA	28'-0"	25'-0"
B	21'-0"	21'-0"	20'-0"
C	20'-0"	20'-0"	19'-0"
D *	14 1/8"	14 1/8"	10 5/8"
E *	17 1/2"	17 1/2"	15 5/8"
F *	20"	20"	15"

* See Sheet 3 of 3

CAD FILE: DTL-021.dwg

CITY OF BALTIMORE DEPARTMENT OF TRANSPORTATION				FHWA WASHINGTON OFFICE	ROUND STEEL MAST ARM POLES: GALVANIZED OR BRONZED	
APPROVED:	ISSUED	3-13-98			CATEGORY CODE:	
	REVISED				SCALE: NONE	SHEET 1 OF 3
DETAIL NO.						

F.A.P. NO STP-3057 (4)N
SHA CONTRACT NO: BC320-001-815
BALTIMORE CITY CONTRACT NO. TR08310

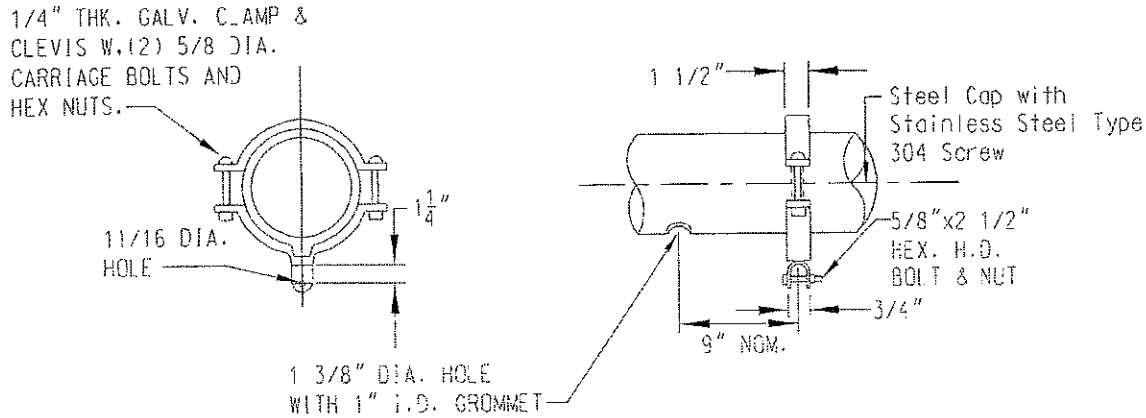

SIGNAL HANGER DETAIL "8"/ ASTRO BRACKETS AND PIPE FITTINGS ON POLE AND MASTARM TYP. @ EACH SIGNAL LOCATION

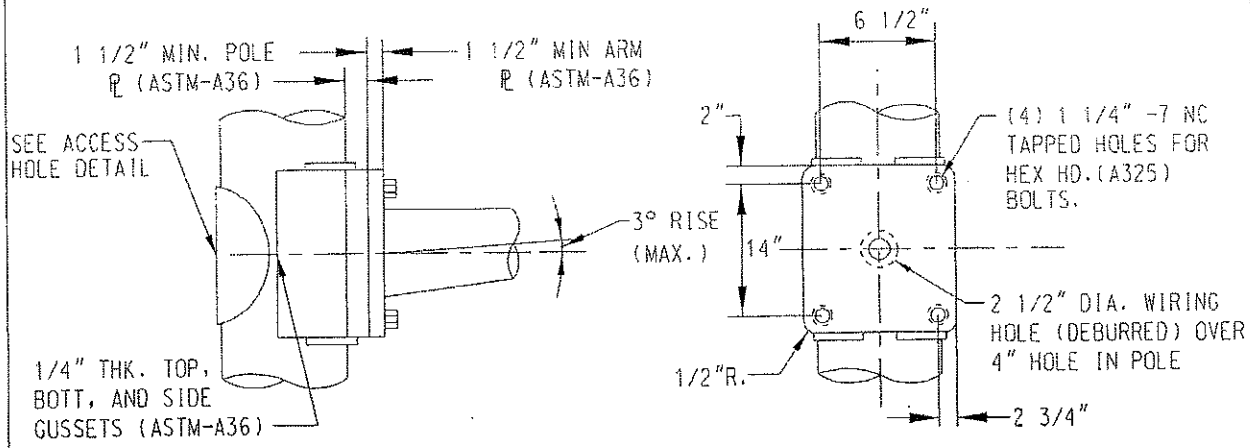

SIGNAL ARM ATTACHMENT DETAIL

CAD FILE: DTL-021A.dwg

CITY OF BALTIMORE DEPARTMENT OF TRANSPORTATION			FHWA WASHINGTON OFFICE	ROUND STEEL MAST ARM POLES: GALVANIZED OR BRONZED
APPROVED:	ISSUED			CATEGORY CODE:
	REVISED	3-13-98		SCALE: NONE / SHEET 2 OF 3
DETAIL NO.				

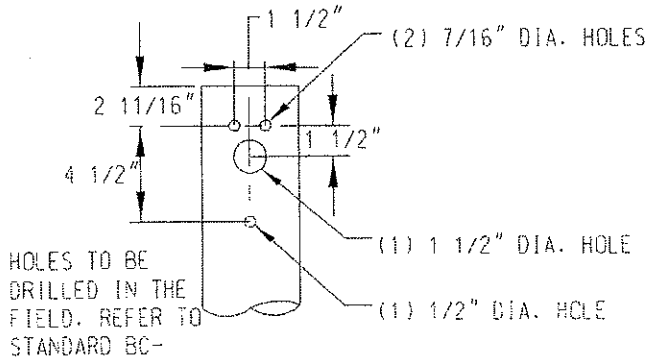

SQUARE LUMINAIRE ARM ATTACHMENT DETAIL

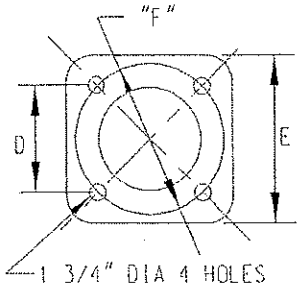

BASE PLATE DETAIL

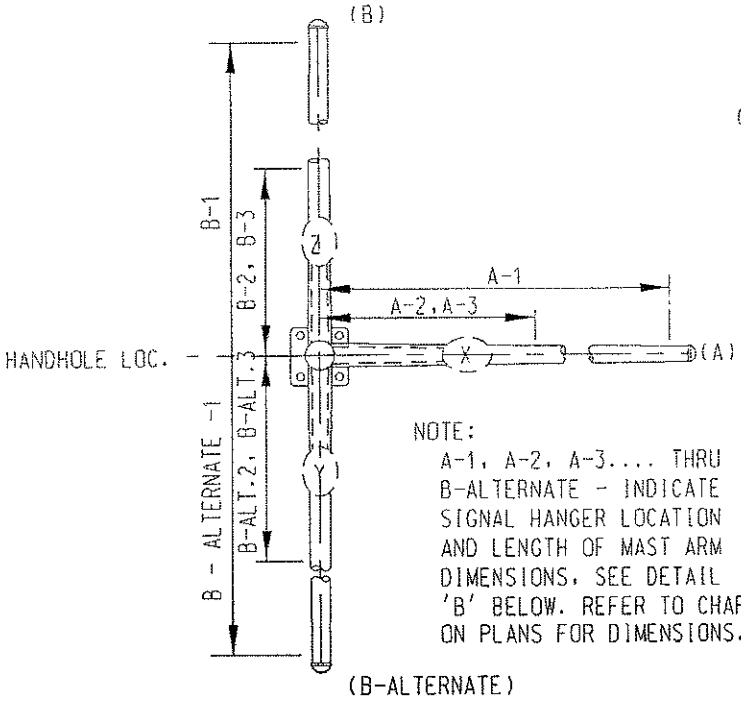

NOTE:
A-1, A-2, A-3.... THRU B-ALTERNATE - INDICATE SIGNAL HANGER LOCATION AND LENGTH OF MAST ARM DIMENSIONS. SEE DETAIL 'B' BELOW. REFER TO CHART ON PLANS FOR DIMENSIONS.

MAST ARM DETAIL

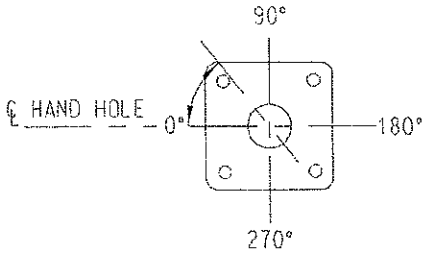

ARM LOC DETAIL (TYP.)

ALL ANGLES MEASURED CLOCKWISE FROM HAND HOLE LOC (@ 0°)

CAD FILE: OTL-021B.dwg

CITY OF BALTIMORE DEPARTMENT OF TRANSPORTATION		FHWA WASHINGTON OFFICE	ROUND STEEL MAST ARM POLES: GALVANIZED OR BRONZED
APPROVED:	ISSUED		CATEGORY CODE:
	REVISED	8-5-93 / 8-16-93	SCALE: NONE / SHEET 3 OF 3
DETAIL NO.			

F.A.P. NO STP-3057 (4)N
SHA CONTRACT NO: BC320-001-815
BALTIMORE CITY CONTRACT NO. TR08310

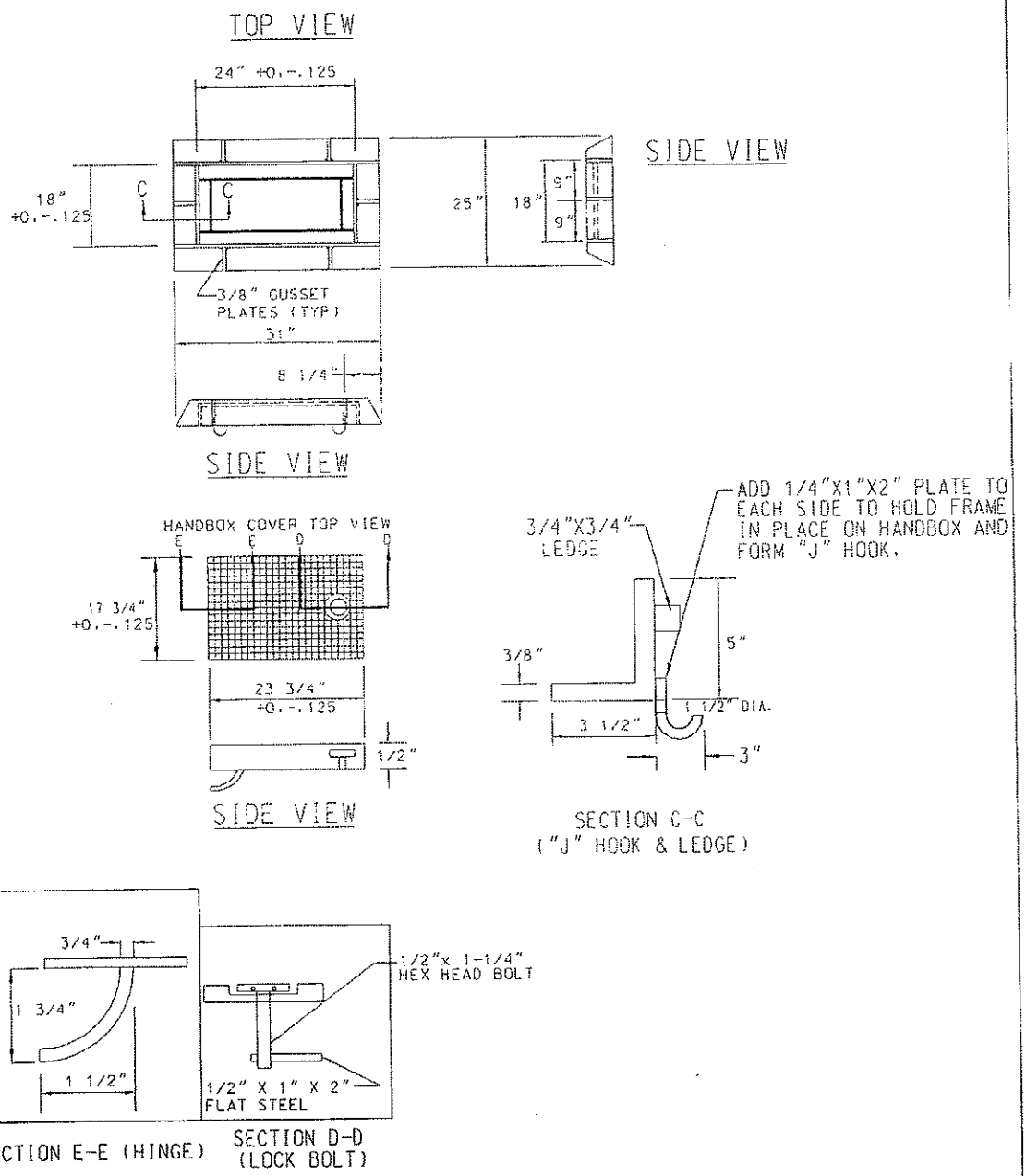

CAD FILE: DTL-042.dwg

CITY OF BALTIMORE DEPARTMENT OF PUBLIC WORKS		FHWA WASHINGTON OFFICE	COLLECTOR HANDBOX FRAME AND COVER TRAFFIC	
APPROVED:	ISSUED		CATEGORY CODE:	
	REVISED		SCALE: NONE	SHEET 1 OF 1
DETAIL NO.				

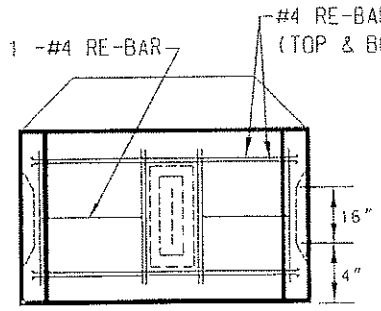

SECTION B-B

NOTES:

1. CONCRETE IS TO BE 5000 PSI.
2. NO RE-BAR IN KNOCKOUTS.
3. FULL CONCRETE DIMENSIONS ARE REQUIRED, ANY AIR POCKETS MUST BE PATCHED BEFORE SHIPMENT.
4. ALL RE-BAR IS TO BE IN THE CENTER OF WALLS.
5. MINIMUM CONCRETE COVER FOR RE-BAR IS 1 1/2".

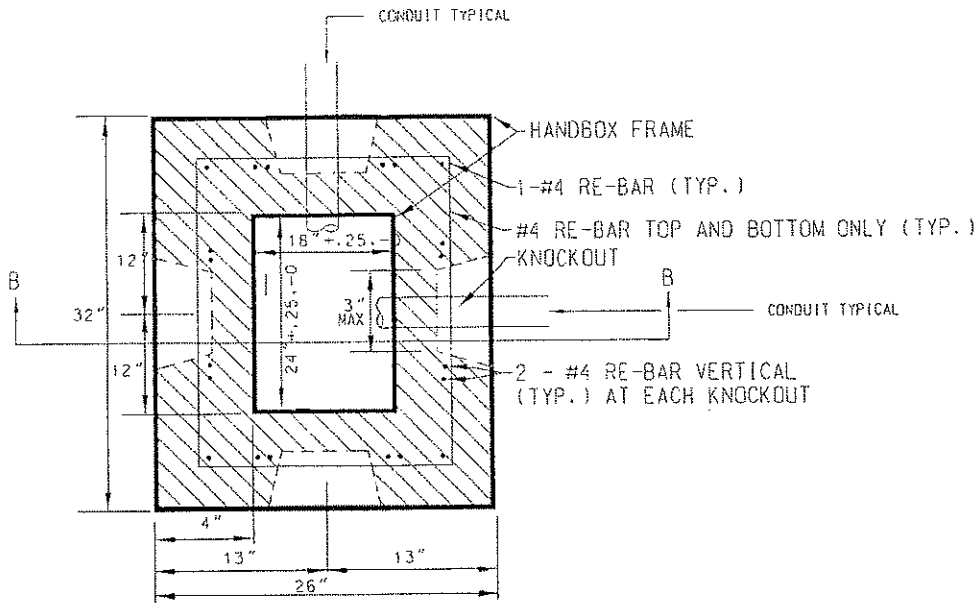

PLAN VIEW

CAD FILE: DTL-043.dwg

CITY OF BALTIMORE DEPARTMENT OF PUBLIC WORKS			FHWA WASHINGTON OFFICE	STANDARD PRECAST COLLECTOR HANDBOX TRAFFIC
APPROVED: _____	ISSUED			CATEGORY CODE:
	REVISED			SCALE: NONE / SHEET 1 OF 1
DETAIL 1 NO.				

F.A.P. NO STP-3057 (4)N
SHA CONTRACT NO: BC320-001-815
BALTIMORE CITY CONTRACT NO. TR08310

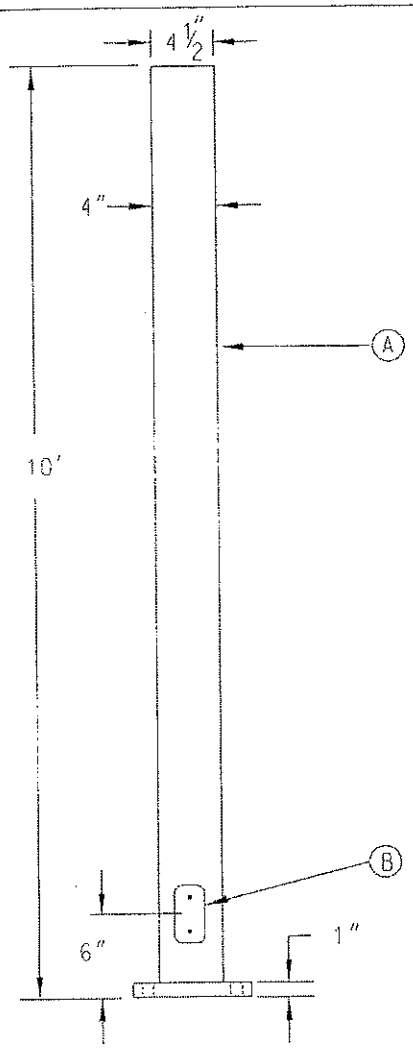

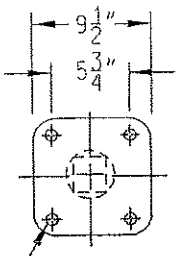

4 1 1/4"
Dia. holes

REQUIREMENTS:

(A) ROUND GALVANIZED STEEL 4" DIAMETER STANDARD PIPE SIZE (4 1/2 O.D. X .237" WALL THICKNESS) SHAFT TO BE MIN (2) GAUGE STEEL

(B) MIN. SIZE 3" X 5" REINFORCED HANDHOLE & COVER PLATE WITH ROUNDED CORNERS. MAX 3/8" PROTRUSION AROUND HANDHOLE.

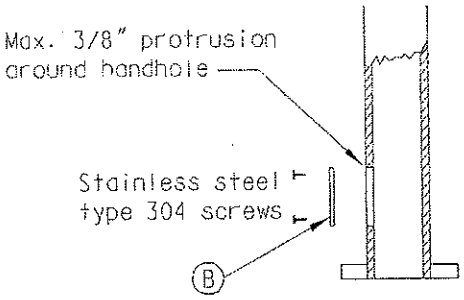

HANDHOLE DETAIL

NOTE:
A 3/8" POLE GROUNDIND LUG SHALL BE PROVIDED AT THE HANDHOLE.

CAD FILE: DTL-007A.dwg

CITY OF BALTIMORE DEPARTMENT OF TRANSPORTATION			FHWA WASHINGTON OFFICE	STEEL PEDESTAL POLE
APPROVED:	ISSUED			CATEGORY CODE:
	REVISED	8-5-93		
		10-20-93		SCALE: NONE / SHEET 1 OF 1
DETAIL NO.		12-5-94		

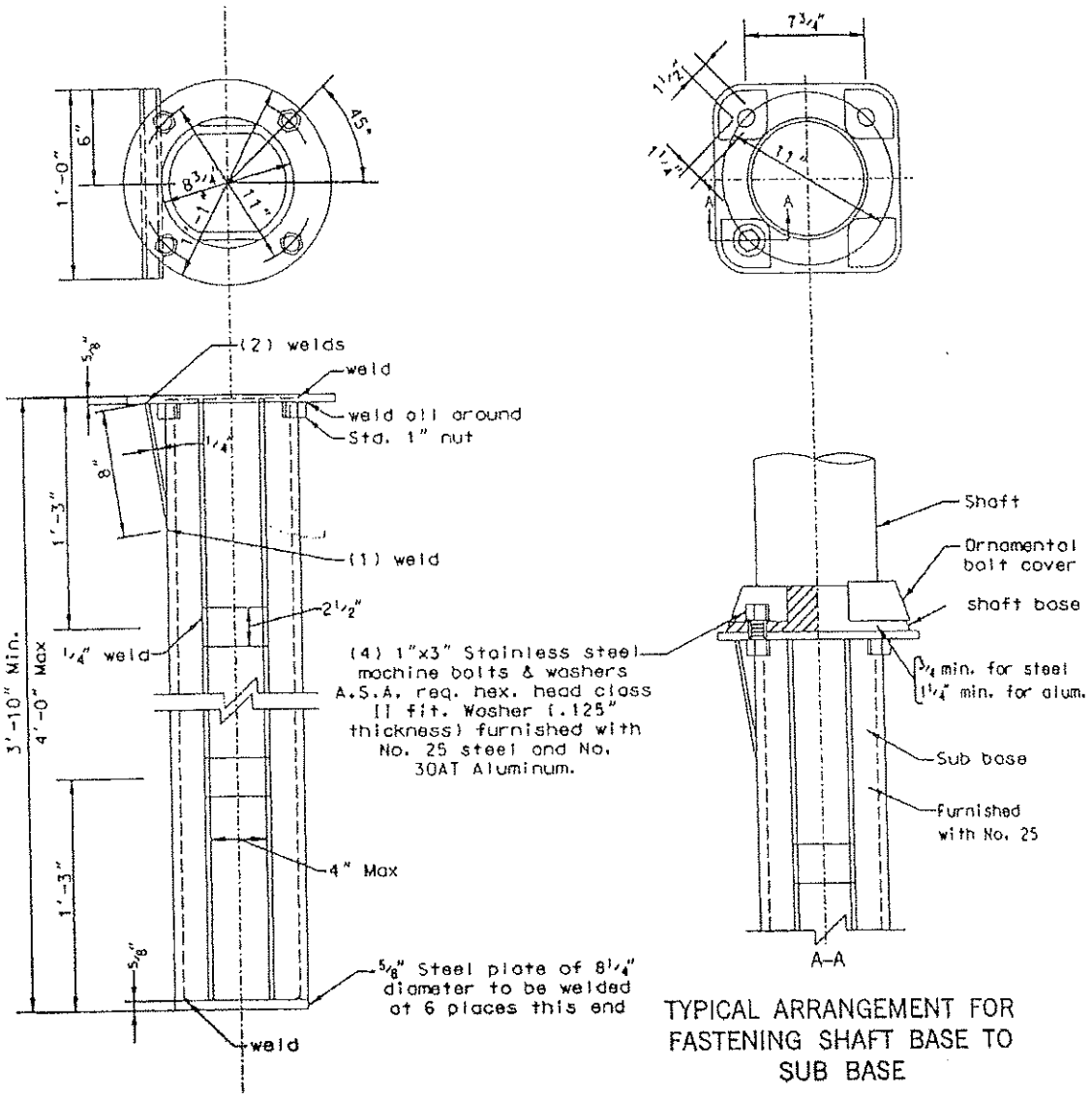

TYPICAL ARRANGEMENT FOR FASTENING SHAFT BASE TO SUB BASE

CAD FILE: SUBBASE.dwg

CITY OF BALTIMORE DEPARTMENT OF PUBLIC WORKS				FHWA WASHINGTON OFFICE	STEEL SUB BASE FOR HOMELAND POLES
APPROVED:	ISSUED	2-8-71		8-17-71	CATEGORY CODE:
	REVISED				
DETAIL NO.					SCALE: NONE / SHEET 1 OF 1

TRAFFIC SIGNAL STANDARD WIRING PRACTICE

VEHICLE SIGNAL CIRCUITS

3 SECTION, 4 SECTION WITH DUAL RED

4 CONDUCTOR CABLE.

FUNCTION	CONDUCTOR COLOR
RED INDICATION(S)	RED
YELLOW INDICATION	BLACK
GREEN INDICATION	GREEN
COMMON	WHITE

4 SECTION WITH ARROW

7 CONDUCTOR CABLE.

FUNCTION	CONDUCTOR COLOR
RED INDICATION	RED
YELLOW INDICATION	BLACK
GREEN INDICATION	GREEN
GREEN ARROW	BLUE
COMMON	WHITE
SPARE	ORANGE
SPARE	WHT./BLK.

5 SECTION, WITH ARROWS

7 CONDUCTOR CABLE.

FUNCTION	CONDUCTOR COLOR
RED INDICATION	RED
YELLOW INDICATION	BLACK
GREEN INDICATION	GREEN
GREEN ARROW	BLUE
YELLOW ARROW	WHT./ BLK.
COMMON	WHITE
SPARE	ORANGE

PEDESTRIAN SIGNAL CIRCUITS

SINGLE FACE

4 CONDUCTOR CABLE	CONDUCTOR COLOR
DON'T WALK INDICATION	RED
WALK	GREEN
COMMON	WHITE
SPARE	BLACK

SINGLE OR (DOUBLE FACE) WITH PUSH BOTTON

7 CONDUCTOR CABLE	CONDUCTOR COLOR
DON'T WALK INDICATION, PRIMARY STREET	RED
WALK INDICATION, PRIMARY STREET	GREEN
SPARE (DON.T: WALK INDICATION, SECONDARY STREET)	ORANGE
SPARE (WALK INDICATION, SECONDARY STREET)	BLUE
SIGNAL COMMON	WHITE
PUSH BUTTON	BLACK
PUSH BUTTON COMMON	WHT./BLK.

PUSH BUTTON ON SEPARATE POST

2 CONDUCTOR CABLE	CONDUCTOR COLOR
PUSH BUTTON	BLACK
PUSH BUTTON COMMON	WHITE

CAD FILE: DTL-022.dwg

CITY OF BALTIMORE DEPARTMENT OF TRANSPORTATION			FHWA WASHINGTON OFFICE	TRAFFIC SIGNAL STANDARD WIRING PRACTICE	
APPROVED:	ISSUED			CATEGORY CODE:	
	REVISED	8-5-93		SCALE: NONE	SHEET 1 OF 2
DETAIL NO.					

TRAFFIC SIGNAL STANDARD WIRING PRACTICE

DETECTOR CIRCUITS

INDUCTIVE LOOP DETECTOR CABINETS

7 CONDUCTOR CABLE

FUNCTION	CONDUCTOR COLOR	DETECTOR CABINET TERMINAL #
AC +	RED	CIRCUIT BREAKER
CHANNEL 1 DETECTOR OUTPUT	GREEN	6
CHANNEL 1 DELAY OVERRIDE	ORANGE	4
CHANNEL 2 DETECTOR OUTPUT	BLACK	7
CHANNEL 2 DELAY OVERRIDE	BLUE	5
AC -	WHITE	14
SPARE	WHT./BLK	-

INDUCTIVE LOOP OR LEAD IN CABLE

2 CONDUCTOR WITH SHIELD *

FUNCTION	CONDUCTOR COLOR	DETECTOR CABINET TERMINAL #
CHANNEL 1 DETECTOR INPUT	BLACK	9
	RED	10
CHANNEL 2 DETECTOR INPUT	BLACK	11
	RED	12
		14

* (SHIELD WIRE TO BE CONNECTED TO AC -)

OTHER DETECTORS

AC +	RED
DETECTOR OUTPUT	GREEN
AC -	WHITE
SPARE	BLACK

NOTES:

1. ALL CABLE TO BE #14 A.W.G., STRANDED, MEETING CURRENT I.M.S.A. SPECIFICATIONS.
2. INDIVIDUAL CONDUCTORS TO BE TERMINATED WITH SPADE LUGS.
3. SPLICES IN WIRE ARE NOT PERMITTED UNLESS OTHERWISE DIRECTED BY THE ENGINEER.

CAD FILE: DTL-022A.dwg

CITY OF BALTIMORE DEPARTMENT OF TRANSPORTATION		FHWA WASHINGTON OFFICE	TRAFFIC SIGNAL STANDARD WIRING PRACTICE
APPROVED:	ISSUED		CATEGORY CODE:
	REVISED	8-5-93	SCALE: NONE / SHEET 2 OF 2
DETAIL NO.			

F.A.P. NO STP-3057 (4)N
SHA CONTRACT NO: BC320-001-815
BALTIMORE CITY CONTRACT NO. TR08310

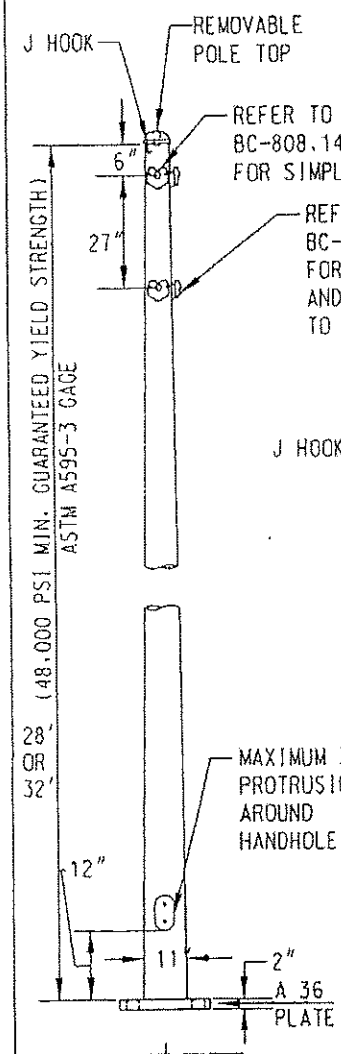

* 2"DIA. HOLES ARE REQUIRED FOR 32' STRAIN POLE

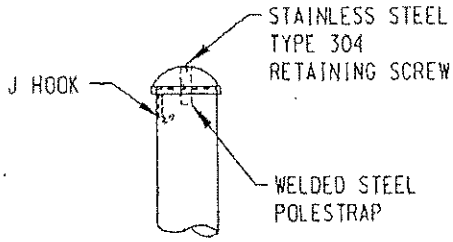

TYPICAL CAP DETAIL

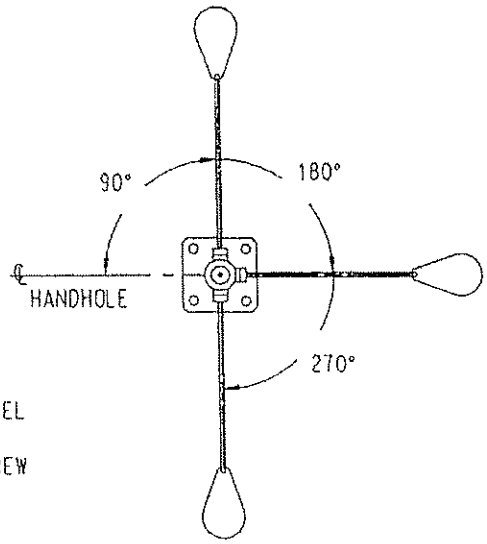

ARM LOCATION DETAIL

NOTES:

1. THREE SETS OF DOUBLE BOLT POLE SIMPLEX FITTINGS SHALL BE LOCATED AT 90°, 180°, AND 270° CLOCKWISE FROM HAND HOLE ON 28' AND 32' STRAIN POLES.
2. A COVER PLATE SHALL BE SUPPLIED FOR ALL SIMPLEX FITTINGS

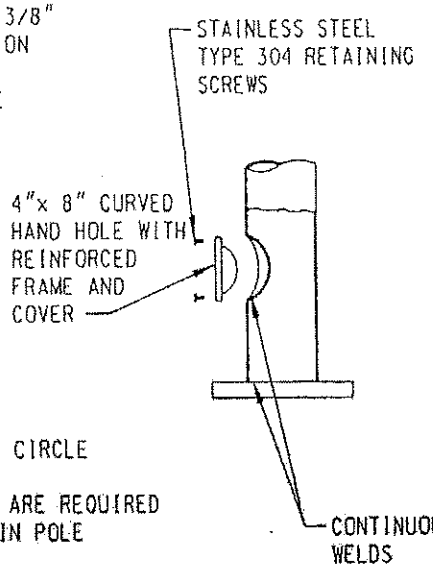

(4) ANCHOR BOLTS SHALL BE SUPPLIED WITH EACH POLE. EACH BOLT SHALL BE FURNISHED WITH 2-HEX NUTS, AND 2-FLATWASHERS REFER TO STANDARD TRAFFIC ANCHOR BOLTS DETAIL

CAD FILE: DTL-023.dwg

CITY OF BALTIMORE DEPARTMENT OF PUBLIC WORKS			FHWA WASHINGTON OFFICE	JOINT USE TYPE STEEL STRAIN POLE
APPROVED:	ISSUED	8-5-93		CATEGORY CODE:
	REVISED	8-18-95		SCALE: NONE / SHEET 1 OF 1
DETAIL NO.				

F.A.P. NO STP-3057 (4)N
SHA CONTRACT NO: BC320-001-815
BALTIMORE CITY CONTRACT NO. TR08310

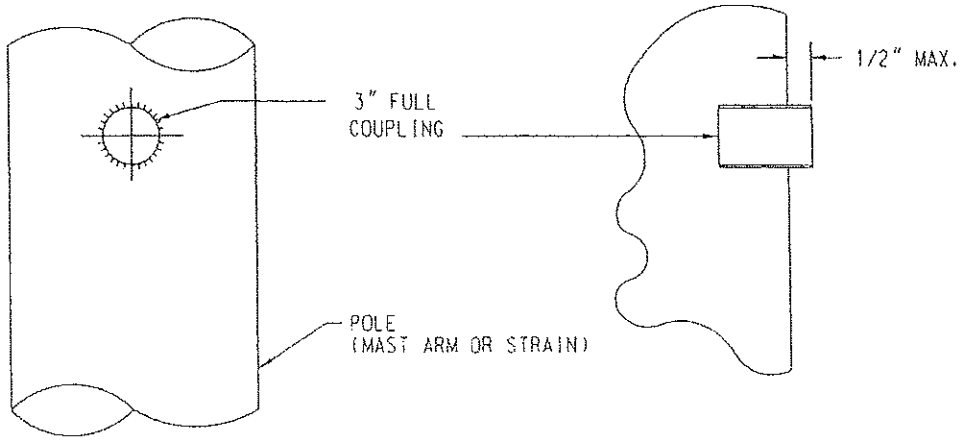

NOTES:

1. DRILL HOLE IN THE POLE TO FIT STANDARD PIPE COUPLING. FIELD WELD COUPLING TO MEET AWS WELDING SPECIFICATIONS.
2. WELDING TO BE PERFORMED BY A CERTIFIED WELDER.
3. ALL WELDING SHALL BE INSPECTED AND APPROVED BY SHA LAB PERSONNEL.
4. THE AFFECTED AREA SHALL BE CLEANED WITH METAL WIRE BRUSH AND SPRAYED WITH COLD GALVANIZED COMPOUND.
5. A HOLE MAY BE DRILLED WITHOUT WELDING A BLIND COUPLING FOR 3/4" THRU 1 1/2" SIZE, PROVIDED THERE IS NO OTHER HOLE WITHIN 12". AFTER DRILLING THE HOLE FOLLOW NOTE #4.
6. 3" FULL COUPLING SHALL HAVE INSIDE CHASE NIPPLE.
7. FOR COUPLING DETAILS SEE SPECIFICATIONS (SP-31A, SP-31B) FOR MASTARM.

CAD FILE: DTL-039.dwg

CITY OF BALTIMORE DEPARTMENT OF PUBLIC WORKS		FHWA WASHINGTON OFFICE	DEPARTMENT OF TRANSPORTATION FIELD DRILLED POLE/ARM TRAFFIC
APPROVED:	ISSUED		CATEGORY CODE:
	REVISED		SCALE: NONE / SHEET 1 OF 1
DETAIL			

F.A.P. NO STP-3057 (4)N
SHA CONTRACT NO: BC320-001-815
BALTIMORE CITY CONTRACT NO. TR08310

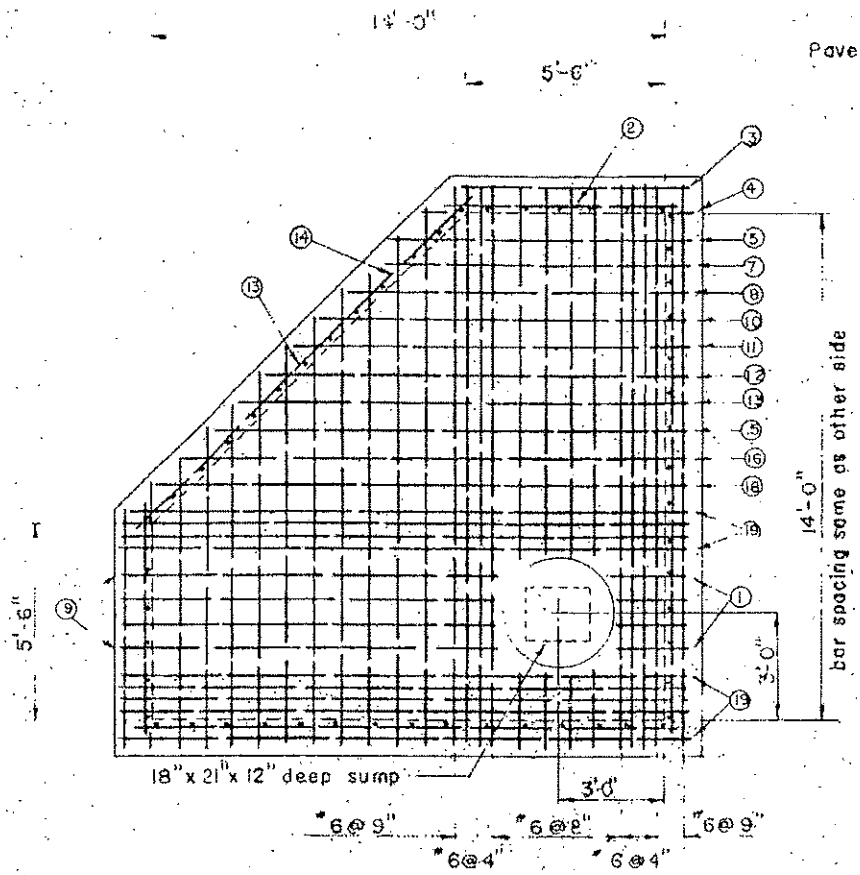

PLAN

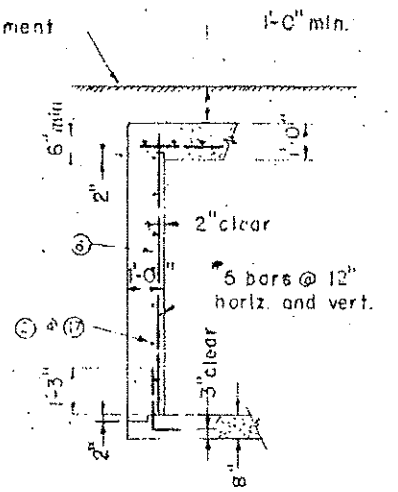

SECTION

	No. Req	Total Length	Total Wgt.
#5 bars	55	137.5'	144#

SCHEDULE OF REINFORCING STEEL

Bar No.		1	2	3	4	5	6	7	8	9	10	11	12	13	14	15	16	17	18	19	Total Length		Total
Bar Size		#6	#3	#6	#6	#6	#5	#6	#6	#6	#6	#6	#6	#6	#5	#6	#6	#5	#6	#6	#5	#6	Wgt.
M.H. Size	H.R.	2'-3"	6'-0"	6'-6"	7'-3"	8'-0"	8'-6"	8'-9"	9'-6"	10'-0"	10'-3"	11'-0"	11'-9"	12'-6"	12'-6"	13'-5"	14'-0"	14'-6"	14'-9"	15'-8"			
14' x 14'	8'	9	14	2	2	2	55	2	2	8	2	2	2	3	7	2	2	14	2	19	842'	645'	1843#

NOTE -

Concrete shall be Class A.

CITY OF BALTIMORE DEPARTMENT OF PUBLIC WORKS			BUREAU OF PUBLIC ROADS		TYPE A MANHOLE — CONDUIT
			MARYLAND DIVISION	WASHINGTON OFFICE	
APPROVED: HEAD, BUREAU OF ENGINEERING	ISSUED	5-1-70			CATEGORY CODE 82501
	REVISED				
DETAIL NO. BC 825.01					SCALE: NONE SHEET 1 OF 1

F.A.P. NO STP-3057 (4)N
SHA CONTRACT NO: BC320-001-815
BALTIMORE CITY CONTRACT NO. TR08310

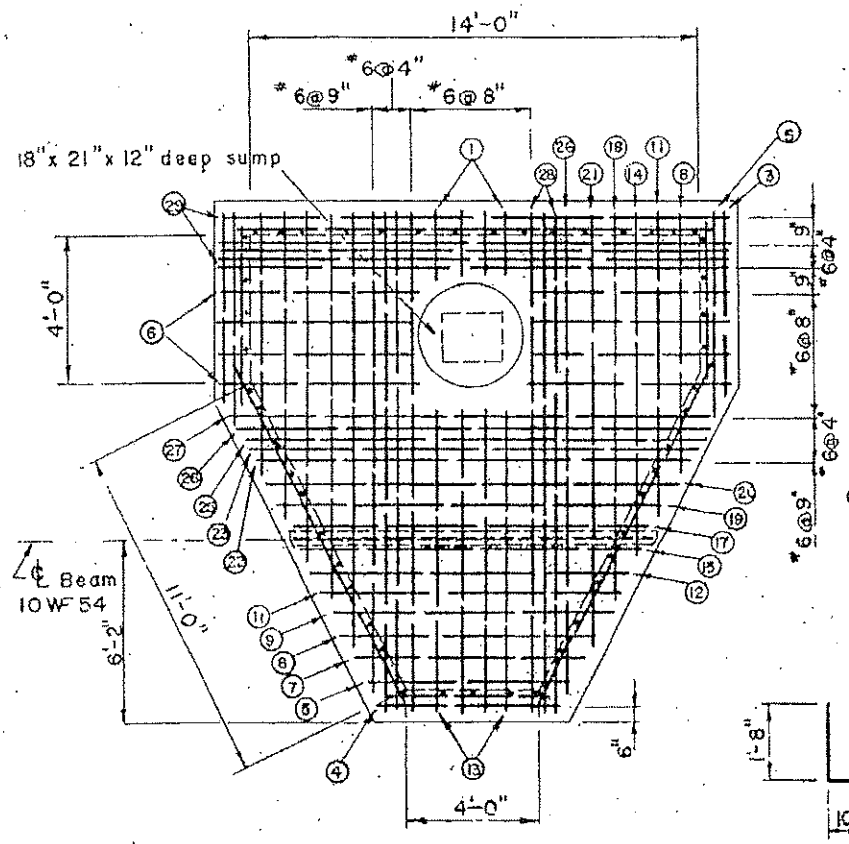

PLAN

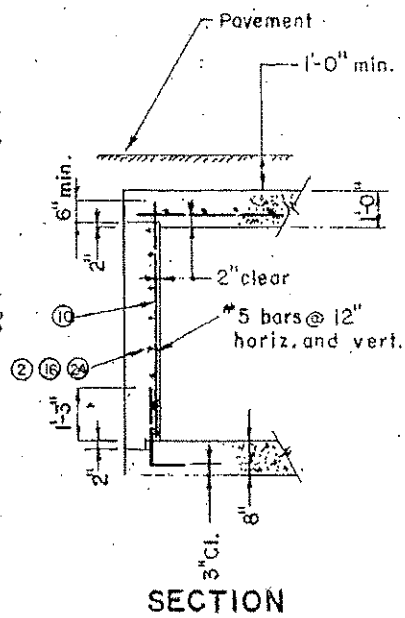

SECTION

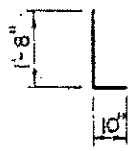

	No. Req.	Total Length	Total Wgt.
#5 bars	50	125'	131#

SCHEDULE OF REINFORCING STEEL

Bar No.		1	2	3	4	5	6	7	8	9	10	11	12	13	14	15	16	17	18	19	20	21	22
Bar Size		#6	#5	#6	#6	#6	#6	#6	#6	#6	#5	#6	#6	#6	#6	#6	#5	#6	#6	#6	#6	#6	#6
M.H. Size	H.R.	2'-3"	4'-6"	5'-0"	5'-3"	6'-0"	6'-3"	6'-9"	7'-6"	8'-3"	8'-6"	9'-0"	9'-9"	10'-0"	10'-6"	10'-9"	11'-3"	11'-6"	11'-9"	12'-3"	13'-0"	13'-3"	13'-9"
14'x 13'-10"	8'	4	21	2	1	3	8	1	3	1	50	3	1	4	2	1	14	1	2	1	1	2	1

23	24	25	26	27	28	29	Total Length		Total Wgt.
#6	#5	#6	#6	#6	#6	#6			
14'-0"	14'-6"	14'-6"	14'-9"	15'-0"	15'-3"	15'-6"	#5	#6	
1	7	1	3	1	6	3	779'	596'	1713#

NOTE -

Concrete to be Class A.

CITY OF BALTIMORE DEPARTMENT OF PUBLIC WORKS			BUREAU OF PUBLIC ROADS		TYPE B MANHOLE-CONDUIT
			MARYLAND DIVISION	WASHINGTON OFFICE	
APPROVED: Edward Gates HEAD, BUREAU OF ENGINEERING	ISSUED	5-1-70			CATEGORY CODE 82502
	REVISED				
DETAIL NO. BC 825-02					SCALE: NONE SHEET 1 OF 1

F.A.P. NO STP-3057 (4)N
SHA CONTRACT NO: BC320-001-815
BALTIMORE CITY CONTRACT NO. TR08310

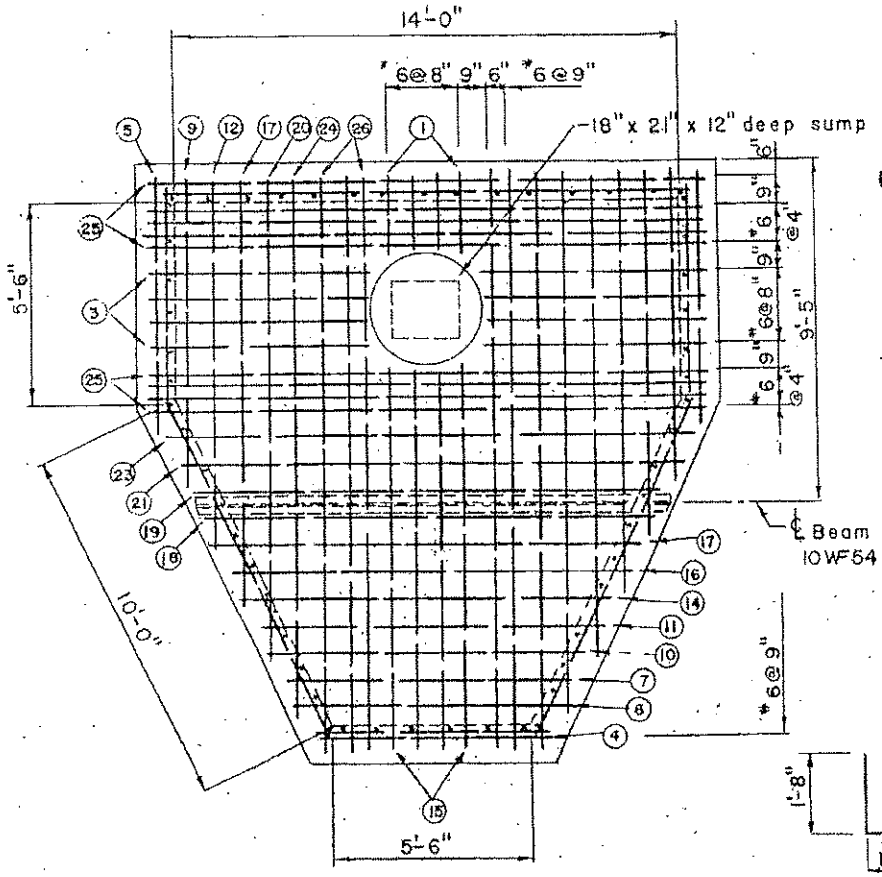

PLAN

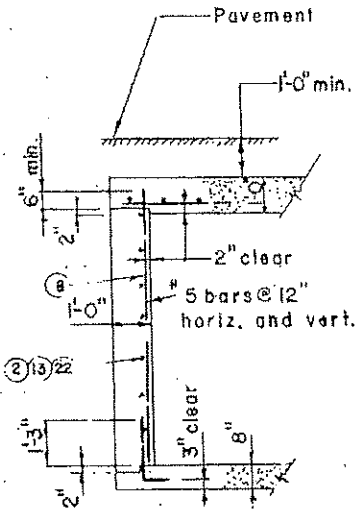

SECTION

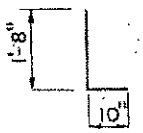

	No. Req.	Total Length	Total Wgt.
5 bars	55	138'	144#

SCHEDULE OF REINFORCING STEEL

Bar No.		1	2	3	4	5	6	7	8	9	10	11	12	13	14	15	16	17	18	19	20	21	22
Bar Size		#6	#5	#6	#6	#6	#6	#6	#5	#6	#6	#6	#6	#5	#6	#6	#6	#6	#6	#6	#6	#6	#5
M.H. Size	H.R.	2'-3"	6'-0"	6'-0"	6'-9"	7'-0"	7'-6"	8'-3"	8'-6"	8'-9"	9'-0"	9'-9"	10'-3"	10'-6"	10'-6"	10'-9"	11'-0"	11'-9"	12'-6"	13'-3"	13'-6"	14'-0"	14'-6"
14'x 14'-6"	8'	4	21	8	1	2	1	1	55	2	1	1	2	14	1	4	1	3	1	1	2	1	7

23	24	25	26				Total Length		Total Wgt.
#6	#6	#6	#6				#5	#6	
14'-9"	15'-0"	15'-6"	16'-0"						
1	2	9	6	—	—	—	842'	597'	1775#

NOTE—
Concrete to be Class A.

CITY OF BALTIMORE DEPARTMENT OF PUBLIC WORKS			BUREAU OF PUBLIC ROADS		TYPE D MANHOLE—CONDUIT
			MARYLAND DIVISION	WASHINGTON OFFICE	
APPROVED: Edward L. Walter HEAD, BUREAU OF ENGINEERING	ISSUED	5-1-70			CATEGORY CODE: 82503
	REVISED				SCALE: NONE SHEET 1 OF 1
DETAIL NO. BC 825.03					

F.A.P. NO STP-3057 (4)N
SHA CONTRACT NO: BC320-001-815
BALTIMORE CITY CONTRACT NO. TR08310

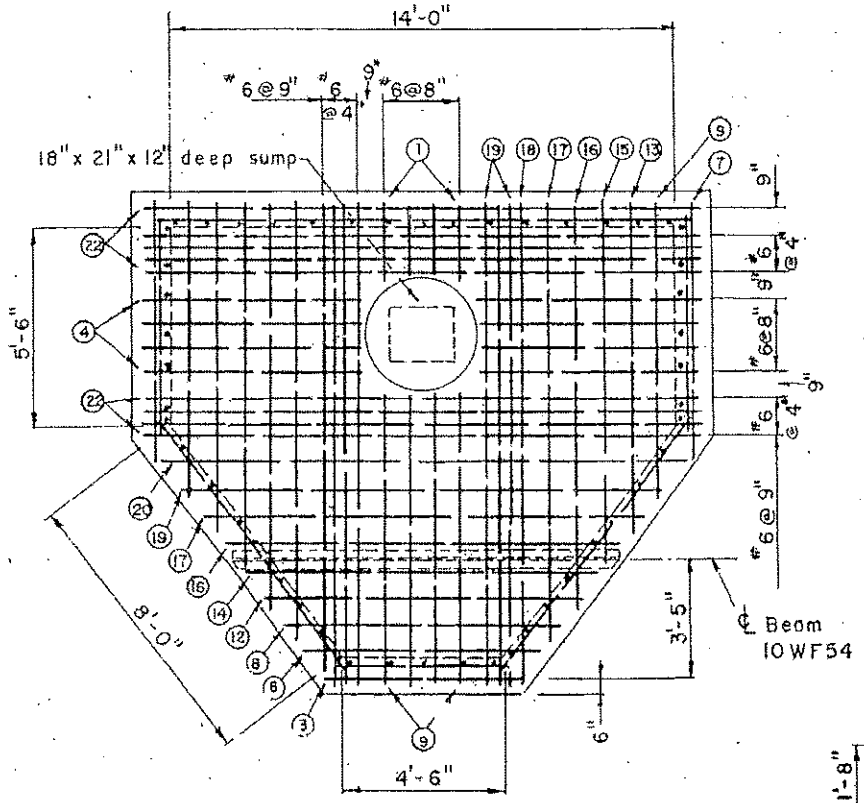

PLAN

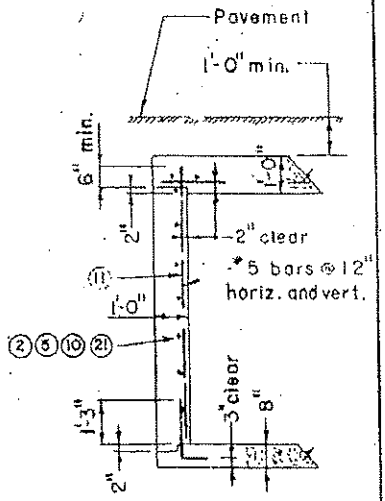

SECTION

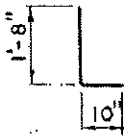

	Req.	Total Length	Total Wgt.
#5 bars	50	125'	131#

SCHEDULE OF REINFORCING STEEL

Bar No.		1	2	3	4	5	6	7	8	9	10	11	12	13	14	15	16	17	18	19	20	21	22	Total Length		Total Wgt.
Bar Size		#6	#5	#6	#6	#5	#6	#6	#6	#6	#5	#5	#6	#6	#6	#6	#6	#6	#6	#6	#6	#5	#6	#5	#6	
M. H. Size	H.R.	2'-3"	4'-9"	5'-6"	6'-0"	6'-0"	6'-9"	7'-3"	7'-9"	8'-3"	8'-3"	8'-6"	9'-0"	9'-3"	10'-0"	10'-3"	11'-3"	12'-3"	13'-3"	13'-6"	14'-6"	14'-6"	15'-6"			
14' x 11'-11"	8"	4	7	1	8	14	1	2	1	6	14	50	1	2	1	2	3	3	2	7	[illegible]	7	9	760'	545'	1610#

NOTE -

Concrete shall be Class A.

CITY OF BALTIMORE DEPARTMENT OF PUBLIC WORKS			BUREAU OF PUBLIC ROADS		TYPE C MANHOLE-CONDUIT
			MARYLAND DIVISION	WASHINGTON OFFICE	
APPROVED: C. Edward Walter	ISSUED	5-1-70			CATEGORY CODE 82504
HEAD, BUREAU OF ENGINEERING	REVISED				
DETAIL NO. BC 825 .04					SCALE: NONE SHEET 1 OF 1

F.A.P. NO STP-3057 (4)N
SHA CONTRACT NO: BC320-001-815
BALTIMORE CITY CONTRACT NO. TR08310

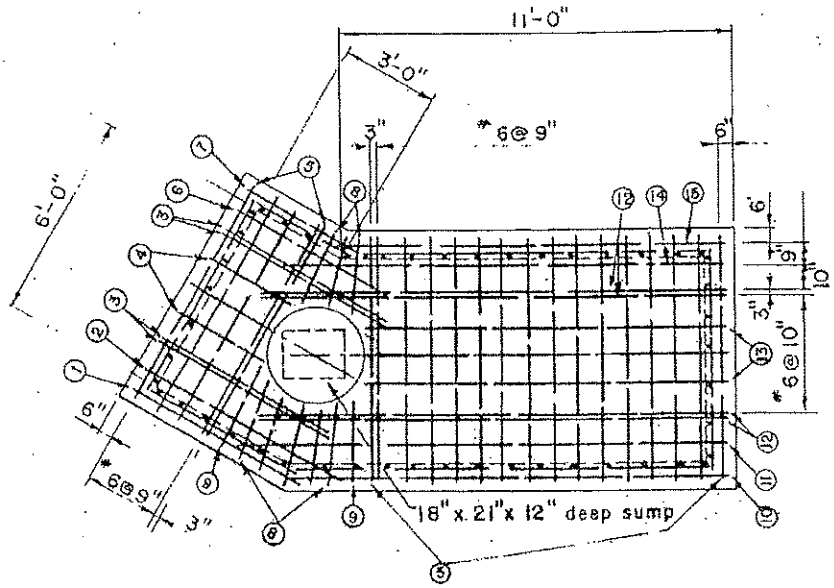

PLAN

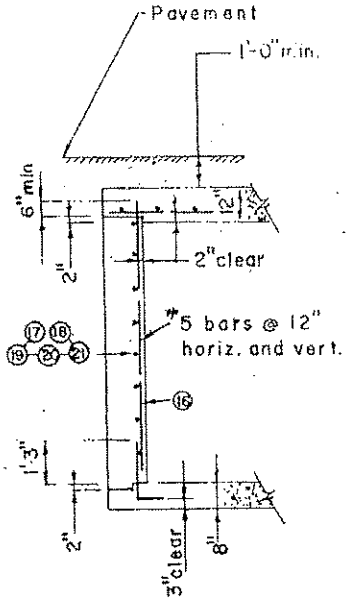

SECTION

	Req.	Total Length	Total Wgt.
#5 bars	48	120'	125#

SCHEDULE OF REINFORCING STEEL

Bar No.		1	2	3	4	5	6	7	8	9	10	11	12	13	14	15	16	17	18	19	20	21	Total Length		Total Wgt.
Bar Size		#6	#6	#6	#6	#6	#6	#6	#6	#6	#6	#6	#6	#6	#6	#6	#5	#5	#5	#5	#5	#5			
M.H. Size	H.R.	6'-0"	7'-0"	6'-3"	2'-9"	7'-6"	5'-6"	4'-3"	2'-3"	2'-6"	14'-5"	15'-3"	14'-6"	10'-9"	13'-6"	12'-3"	8'-6"	3'-6"	5'-3"	6'-6"	11'-6"	13'-3"	#6	#6	
6' x 14'	8'	1	1	4	3	21	1	1	8	2	1	1	4	3	1	1	48	7	7	14	7	7	862'	382'	1265#

NOTE-

Concrete shall be Class A.

CITY OF BALTIMORE DEPARTMENT OF PUBLIC WORKS			BUREAU OF PUBLIC ROADS		TYPE E MANHOLE-CONDUIT
			MARYLAND DIVISION	WASHINGTON OFFICE	
APPROVED C. Edward Walter HEAD, BUREAU OF ENGINEERING	ISSUED	5-1-70			CATEGORY CODE 82505
	REVISED				SCALE: NONE SHEET 1 OF 1
DETAIL NO. BC 825.05					

F.A.P. NO STP-3057 (4)N
SHA CONTRACT NO: BC320-001-815
BALTIMORE CITY CONTRACT NO. TR08310

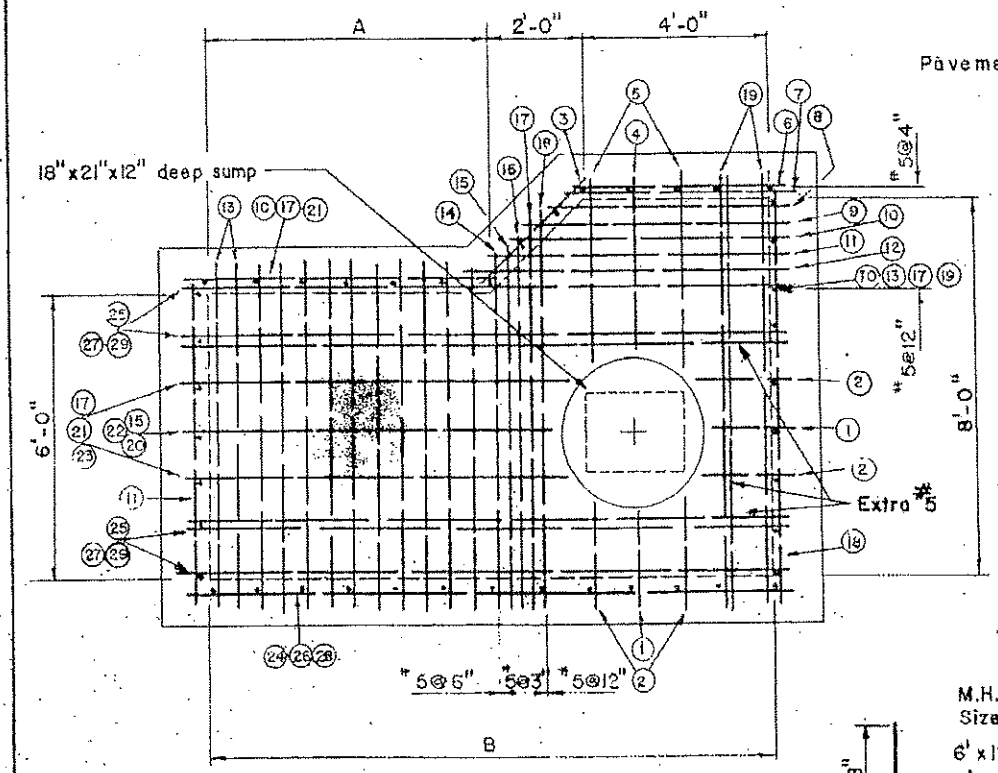

PLAN

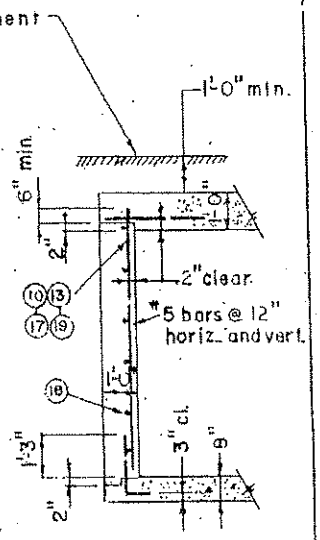

SECTION

M.H. Size	No. Req.	Total Length	Total Wgt.
6' x 12'	43	107.5'	112#
6' x 14'	47	117.5'	123#
6' x 16'	51	127.5'	133#

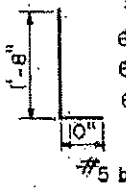

SCHEDULE OF REINFORCING STEEL

Bar No.		1	2	3	4	5	6	7	8	9	10	11	12	13	14	15	16	17	18	19	20	21	22	23	24	25	26	27	28	29	DIM.		TOTALS	
M.H. SIZE	HR	2'-0	2.3	3-3	4-0	4.3	4'-9	5-6	5'-9	6-3	6-6	6-9	7-3	7-6	7-9	8-0	8-3	8-6	8-9	9-6	10-0	10-3	12-0	12-6	12-9	13-6	14-9	15-6	16-9	17-6	A	B	LNGTH.	WGT.
6' x 12'	6'	2	4	6	1	2	6	1	1	1	44	7	1	12	1	1	1	3	7	3	—	—	—	—	6	6	—	—	—	—	6'	12'	818'	853#
	7'	2	4	7	1	2	7	1	1	1	1	8	1	53	1	1	1	1	8	3	—	—	—	—	7	6	—	—	—	—	6'	12'	870'	908#
	8'	2	4	8	1	2	8	1	1	1	1	9	1	12	1	1	1	44	9	3	—	—	—	—	8	6	—	—	—	—	6'	12'	950'	990#
	9'	2	4	9	1	2	9	1	1	1	1	10	1	12	1	1	1	1	10	46	—	—	—	—	9	6	—	—	—	—	6'	12'	1039'	1084#
6' x 14'	6'	2	4	6	1	2	6	1	1	1	48	7	1	16	1	1	1	7	7	3	1	2	—	—	—	—	6	6	—	—	8'	14'	963'	1004#
	7'	2	4	7	1	2	7	1	1	1	1	8	1	63	1	1	1	8	8	3	1	2	—	—	—	—	7	6	—	—	8'	14'	1057'	1102#
	8'	2	4	8	1	2	8	1	1	1	1	9	1	16	1	1	1	56	9	3	1	2	—	—	—	—	8	6	—	—	8'	14'	1151'	1200#
	9'	2	4	9	1	2	9	1	1	1	1	10	1	16	1	1	1	10	10	50	1	2	—	—	—	—	9	6	—	—	8'	14'	1245'	1298#
6' x 16'	6'	2	4	6	1	2	6	1	1	1	52	7	1	20	1	1	1	1	7	3	—	6	1	2	—	—	—	—	6	6	10'	16'	1061'	1107#
	7'	2	4	7	1	2	7	1	1	1	1	8	1	71	1	1	1	1	8	3	—	7	1	2	—	—	—	—	7	6	10'	16'	1163'	1213#
	8'	2	4	8	1	2	8	1	1	1	1	9	1	20	1	1	1	52	9	3	—	8	1	2	—	—	—	—	8	6	10'	16'	1266'	1319#
	9'	2	4	9	1	2	9	1	1	1	1	10	1	20	1	1	1	1	10	54	—	9	1	2	—	—	—	—	9	6	10'	16'	1366'	1425#

NOTE:
Concrete shall be Class A

CITY OF BALTIMORE DEPARTMENT OF PUBLIC WORKS			BUREAU OF PUBLIC ROADS		TYPE F MANHOLE - CONDUIT
			MARYLAND DIVISION	WASHINGTON OFFICE	
APPROVED: C. Edward Walter HEAD, BUREAU OF ENGINEERING	ISSUED	5-1-70			CATEGORY CODE 82506
	REVISED				
DETAIL NO. BC 825 .06					SCALE: NONE SHEET 1 OF 1

F.A.P. NO STP-3057 (4)N
SHA CONTRACT NO: BC320-001-815
BALTIMORE CITY CONTRACT NO. TR08310

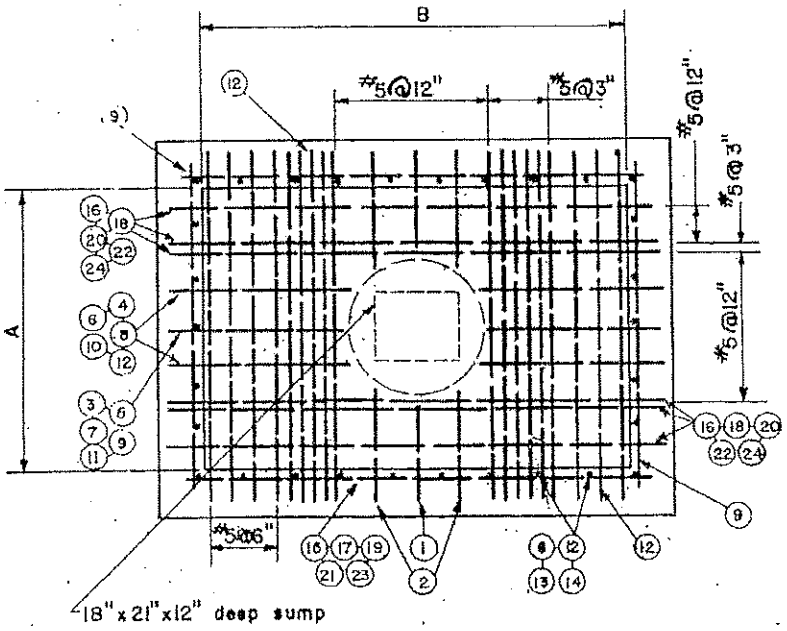

PLAN

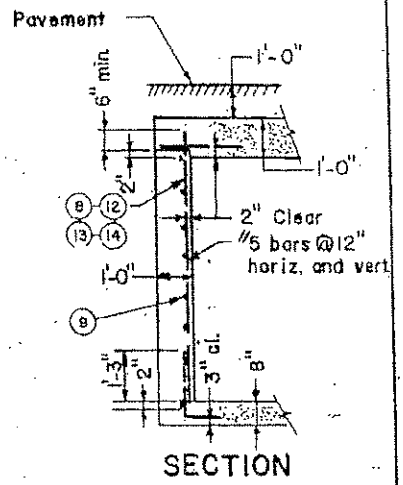

SECTION

M.H. Size	No. Req.	Total Length	Total Wgt.
6'x 9'	30	75'	79#
6'x 12'	36	90'	94#
6'x 14'	40	100'	105#
6'x 15'	42	105'	110#
6'x 16'	44	110'	115#

#5 bars

SCHEDULE OF REINFORCING STEEL

Bar No.		1	2	3	4	5	6	7	8	9	10	11	12	13	14	15	16	17	18	19	20	21	22	23	24	DIM.		TOTALS	
M.H. SIZE	H.R.	2'-3"	2'-6"	3'-9"	4'-0"	5'-3"	5'-6"	6'-3"	6'-6"	6'-9"	7'-0"	7'-3"	7'-6"	8'-6"	9'-6"	9'-9"	10'-6"	12'-9"	13'-6"	14'-9"	15'-6"	15'-9"	16'-6"	16'-9"	17'-6"	A	B	LNGTH.	WGT.
6' x 9'	6'	2	4	2	4	—	—	—	30	12	—	—	18	—	—	12	6	—	—	—	—	—	—	—	—	6'	9'	629'	657
	7'	2	4	2	4	—	—	—	—	14	—	—	48	—	—	14	6	—	—	—	—	—	—	—	—	6'	9'	892'	722
	8'	2	4	2	4	—	—	—	—	16	—	—	18	30	—	16	6	—	—	—	—	—	—	—	—	6'	9'	755'	788
	9'	2	4	2	4	—	—	—	—	18	—	—	18	—	30	18	6	—	—	—	—	—	—	—	—	6'	9'	818'	853
6' x 12'	6'	2	4	—	—	2	4	—	36	12	—	—	24	—	—	—	—	12	6	—	—	—	—	—	—	6'	12'	776'	810
	7'	2	4	—	—	2	4	—	—	14	—	—	60	—	—	—	—	14	6	—	—	—	—	—	—	6'	12'	851'	888
	8'	2	4	—	—	2	4	—	—	16	—	—	24	36	—	—	—	16	6	—	—	—	—	—	—	6'	12'	926'	965
	9'	2	4	—	—	2	4	—	—	18	—	—	24	—	36	—	—	18	6	—	—	—	—	—	—	6'	12'	1001'	1045
6' x 14'	6'	2	4	—	—	—	—	2	44	12	—	—	28	—	—	—	—	—	—	12	6	—	—	—	—	6'	14'	874'	912
	7'	2	4	—	—	—	—	2	4	14	—	—	68	—	—	—	—	—	—	14	6	—	—	—	—	6'	14'	957'	999
	8'	2	4	—	—	—	—	2	4	16	—	—	28	40	—	—	—	—	—	16	6	—	—	—	—	6'	14'	1040'	1085
	9'	2	4	—	—	—	—	2	4	18	—	—	28	—	40	—	—	—	—	18	6	—	—	—	—	6'	14'	1123'	1172
6' x 15'	6'	2	4	—	—	—	—	—	42	14	4	—	30	—	—	—	—	—	—	—	—	12	6	—	—	6'	15'	923'	963
	7'	2	4	—	—	—	—	—	—	16	4	—	72	—	—	—	—	—	—	—	—	14	6	—	—	6'	15'	1010'	1053
	8'	2	4	—	—	—	—	—	—	18	4	—	30	42	—	—	—	—	—	—	—	16	6	—	—	6'	15'	1097'	1144
	9'	2	4	—	—	—	—	—	—	20	4	—	30	—	42	—	—	—	—	—	—	18	6	—	—	6'	15'	1184'	1235
6' x 16'	6'	2	4	—	—	—	—	—	44	12	—	2	36	—	—	—	—	—	—	—	—	—	—	12	6	6'	16'	972'	1014
	7'	2	4	—	—	—	—	—	—	14	—	2	80	—	—	—	—	—	—	—	—	—	—	14	6	6'	16'	1063'	1109
	8'	2	4	—	—	—	—	—	—	16	—	2	36	44	—	—	—	—	—	—	—	—	—	16	6	6'	16'	1154'	1204
	9'	2	4	—	—	—	—	—	—	18	—	2	36	—	44	—	—	—	—	—	—	—	—	18	6	6'	16'	1245'	1299

NOTE: Install Pulling-in Irons as Directed (Hubbard No. 9120 or equivalent)
Concrete shall be Class A

CITY OF BALTIMORE DEPARTMENT OF PUBLIC WORKS		BUREAU OF PUBLIC ROADS		TYPE G MANHOLE - CONDUIT
APPROVED: C. Edward Gelbert HEAD, BUREAU OF ENGINEERING	ISSUED 5-1-70	MARYLAND DIVISION	WASHINGTON OFFICE	CATEGORY CODE 82507
	REVISED			SCALE: NONE SHEET 1 OF 1
DETAIL NO. BC 825 .07				

F.A.P. NO STP-3057 (4)N
SHA CONTRACT NO: BC320-001-815
BALTIMORE CITY CONTRACT NO. TR08310

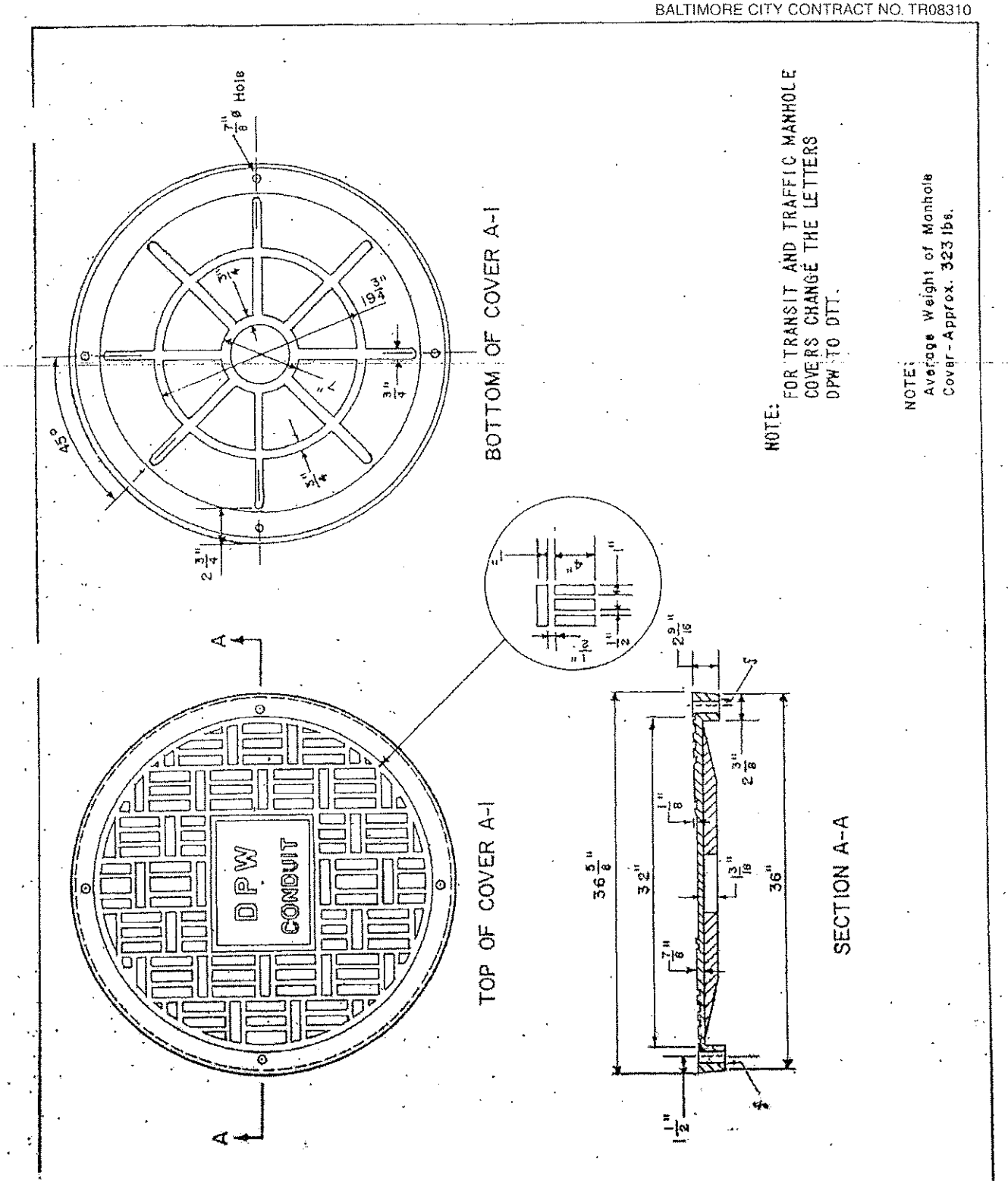

CITY OF BALTIMORE DEPARTMENT OF PUBLIC WORKS			FHWA WASHINGTON OFFICE	MANHOLE - CONDUIT STD. COVER
APPROVED: C. Edward Walter HEAD, BUREAU OF ENGINEERING	ISSUED	5-1-70	9-15-70	CATEGORY CODE 82501-09, 82510
	REVISED	3-14-73 2-28-74	11-14-74	

F.A.P. NO STP-3057 (4)N
SHA CONTRACT NO: BC320-001-815
BALTIMORE CITY CONTRACT NO. TR08310

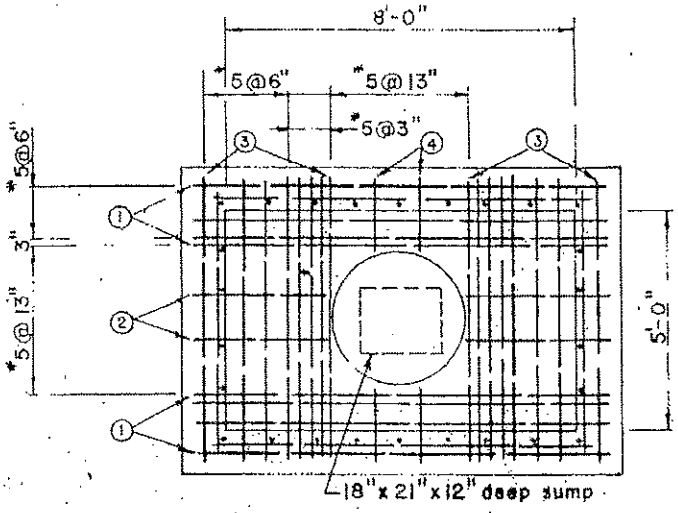

PLAN

STANDARD TRUNKLINE MANHOLE

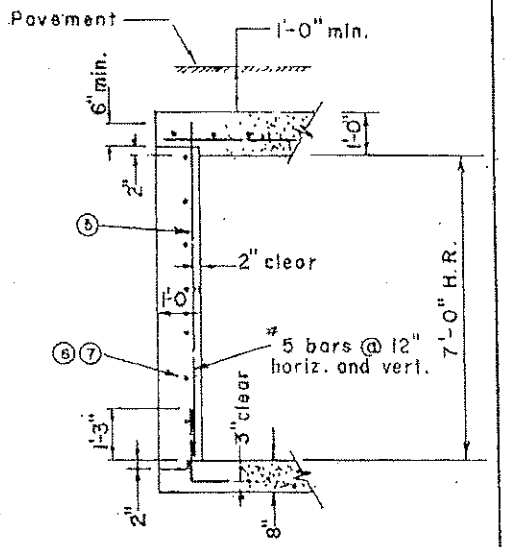

SECTION

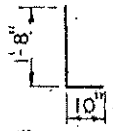

	No Req.	Total Length	Total Wgt.
#5 bars	26	65'	68#

SCHEDULE OF REINFORCING STEEL

Bar No.		1	2	3	4	5	6	7	Total Length		Total Wgt.
Bar Size		#5	#5	#5	#5	#5	#5	#5			
M.H. Size	H.R.	9'-6"	3'-0"	6'-8"	1'-6"	7'-6"	5'-8"	8'-6"	#5	#8	
5' x 8'	7'	8	4	16	4	26	14	14	518	—	613#

NOTE —

Concrete shall be Class A.

CITY OF BALTIMORE DEPARTMENT OF PUBLIC WORKS			BUREAU OF PUBLIC ROADS		TYPE J MANHOLE — CONDUIT	
			MARYLAND DIVISON	WASHINGTON OFFICE		
APPROVED: C. Edward Walter HEAD, BUREAU OF ENGINEERING	ISSUED	5-1-70			CATEGORY CODE 82509	
	REVISED					
DETAIL NO. BC 825 .09					SCALE: NONE	SHEET 1 OF 1

F.A.P. NO STP-3057 (4)N
SHA CONTRACT NO: BC320-001-815
BALTIMORE CITY CONTRACT NO. TR08310

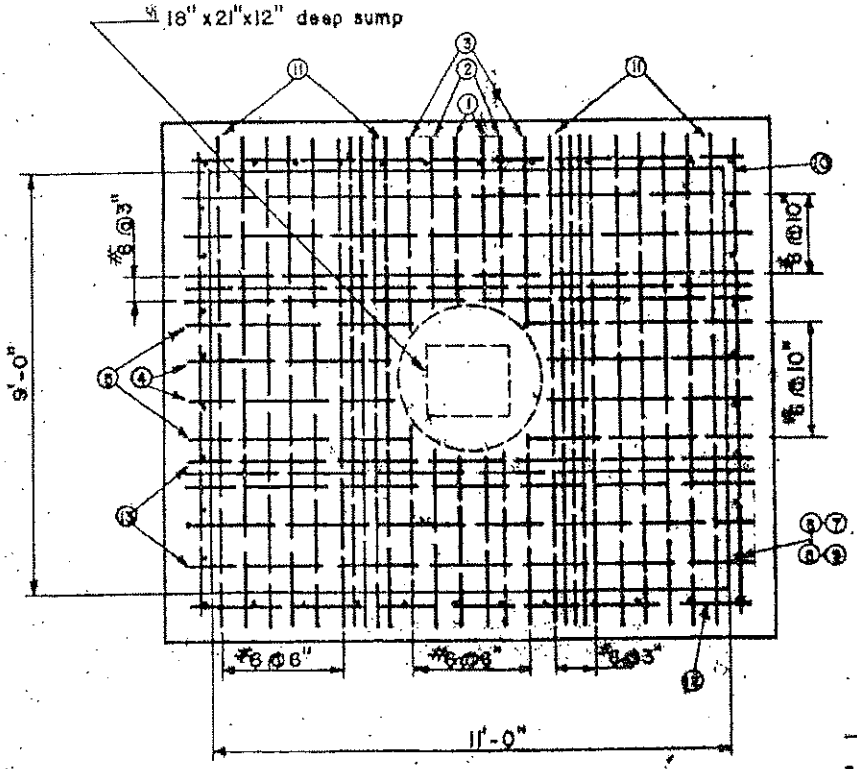

PLAN

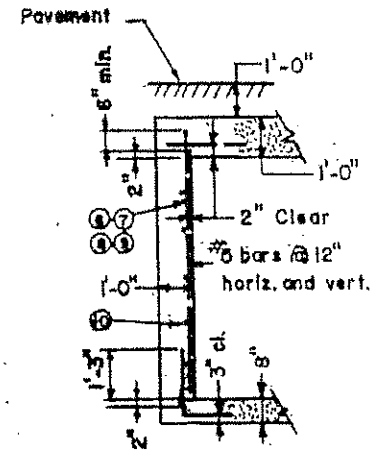

SECTION

STANDARD OIL SWITCH MANHOLE

	Req.	Total Length	Total Wgt.
#5 bars	40	100'	62#

SCHEDULE OF REINFORCING STEEL

Bar. No.		1	2	3	4	5	6	7	8	9	10	11	12	13	TOTAL LENGTH		TOTAL WGT.
Bar Size		#8	#8	#6	#6	#6	#5	#5	#6	#5	#5	#6	#5	#5	#5	#6	
M.H. SIZE	H.R.	3'-6"	3'-9"	4'-2"	4'-6"	5'-2"	6'-6"	7'-6"	8'-6"	9'-6"	9'-9"	10'-6"	11'-9"	12'-6"			
9' x 11'	6'	4	4	4	4	4	40	—	—	—	12	20	12	10	518'	420'	1171#
	7'	4	4	4	4	4	—	40	—	—	14	20	14	10	601'	420'	1288#
	8'	4	4	4	4	4	—	—	40	—	16	20	16	10	684'	420'	1344#
	9'	4	4	4	4	4	—	—	—	40	18	20	18	10	767'	420'	1431#

NOTE:
Concrete shall be Class A

CITY OF BALTIMORE DEPARTMENT OF PUBLIC WORKS		BUREAU OF PUBLIC ROADS		TYPE K MANHOLE - CONDUIT
		MARYLAND DIVISION	WASHINGTON OFFICE	
APPROVED C. Edward Walter HEAD, BUREAU OF ENGINEERING	ISSUED 5-1-70		9-15-70	CATEGORY CODE 82510
	REVISED			SCALE: NONE / SHEET 1 OF 1
DETAIL NO. BC 825 .10				

F.A.P. NO STP-3057 (4)N
SHA CONTRACT NO: BC320-001-815
BALTIMORE CITY CONTRACT NO. TR08310

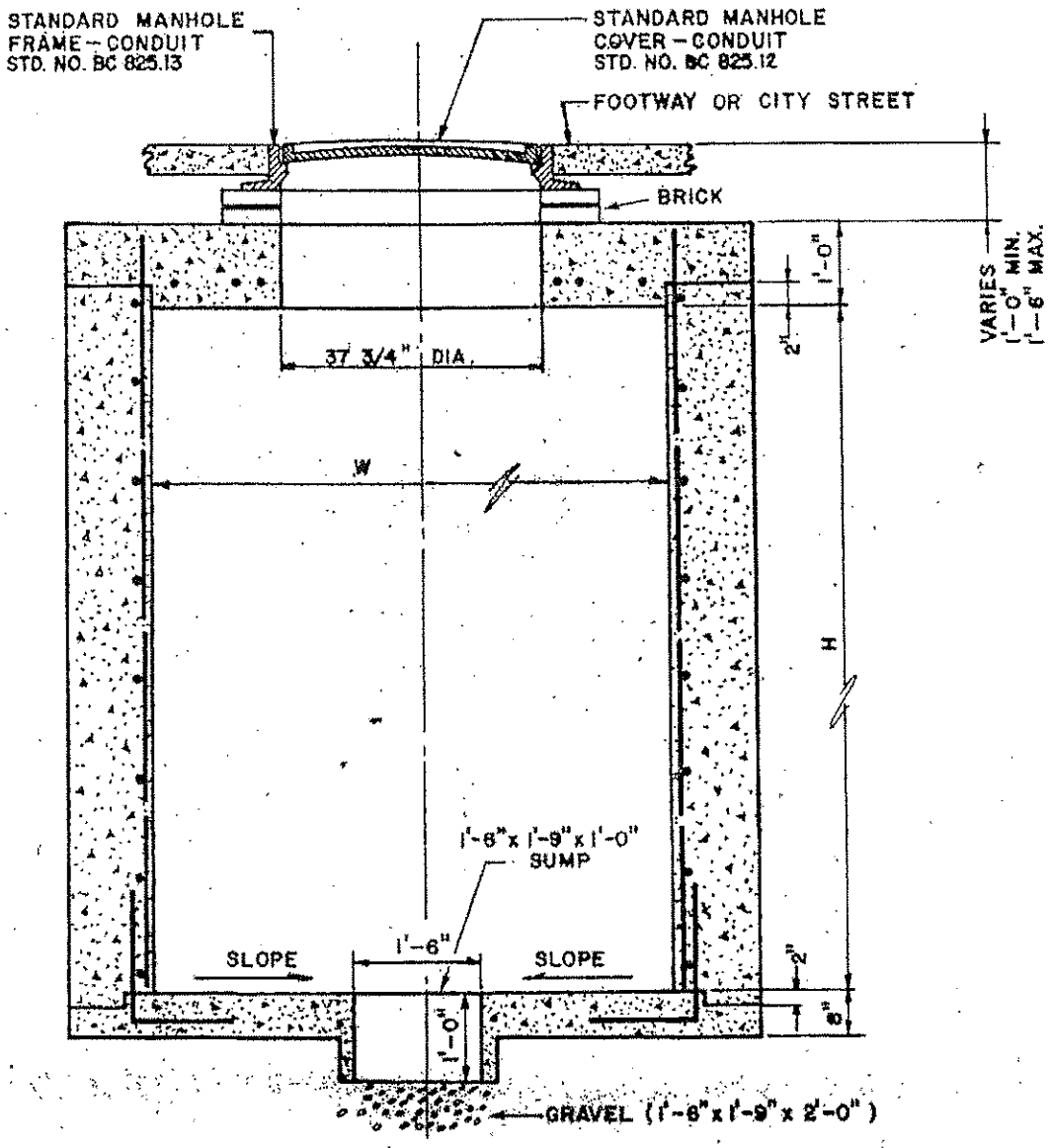

TYPICAL SECTION

CITY OF BALTIMORE DEPARTMENT OF PUBLIC WORKS			BUREAU OF PUBLIC ROADS		MANHOLE - CONDUIT STD. INSTALLATION	
			MARYLAND DIVISION	WASHINGTON OFFICE		
APPROVED: C. Edward Phillips	ISSUED	5-1-70		9-15-70	CATEGORY CODE 82501-09, 82510	
HEAD, BUREAU OF ENGINEERING	REVISED	9-28-72		7-18-73		
DETAIL NO. BC 825 .11					SCALE: NONE	SHEET 1 OF 1

F.A.P. NO STP-3057 (4)N
SHA CONTRACT NO: BC320-001-815
BALTIMORE CITY CONTRACT NO. TR08310

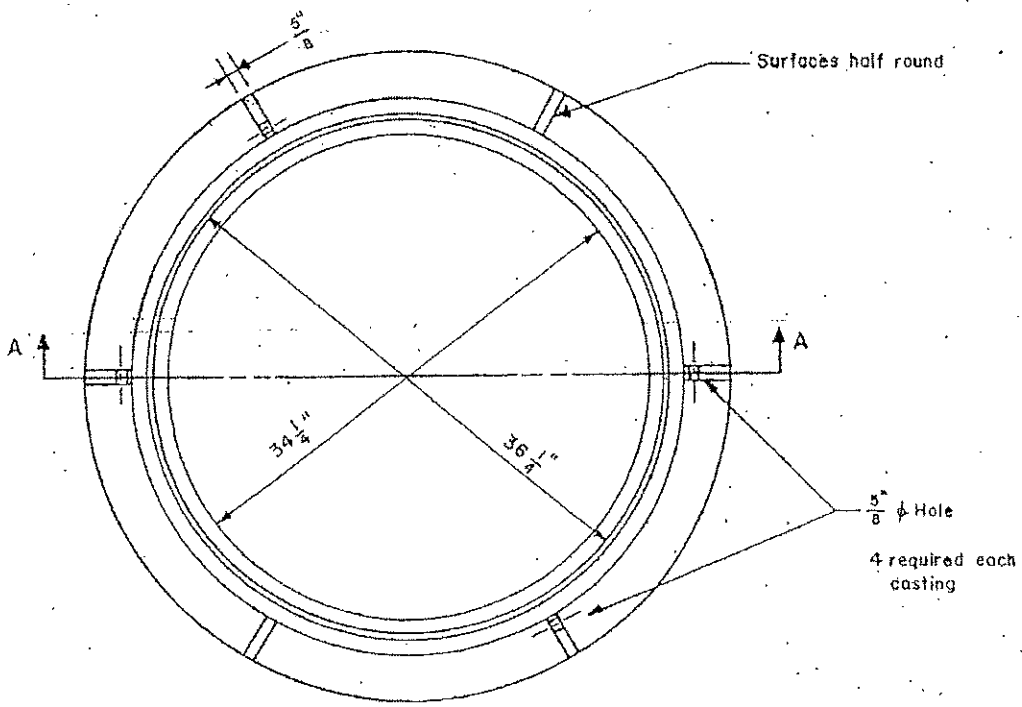

PLAN OF CASTING A-2

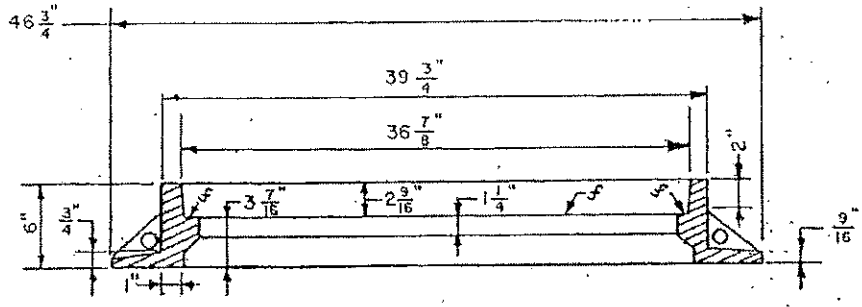

SECTION A-A

Average Weight of casting A-2 -350lbs.

CITY OF BALTIMORE DEPARTMENT OF PUBLIC WORKS			BUREAU OF PUBLIC ROADS		MANHOLE - CONDUIT STD. FRAME
			MARYLAND DIVISION	WASHINGTON OFFICE	
APPROVED: F. Edwin Wolter HEAD, BUREAU OF ENGINEERING	ISSUED	3-1-70			CATEGORY CODE 82501-09,82510
	REVISED				
DETAIL NO. BC 825.13					SCALE: NONE SHEET 1 OF 1

F.A.P. NO STP-3057 (4)N
SHA CONTRACT NO: BC320-001-815
BALTIMORE CITY CONTRACT NO. TR08310

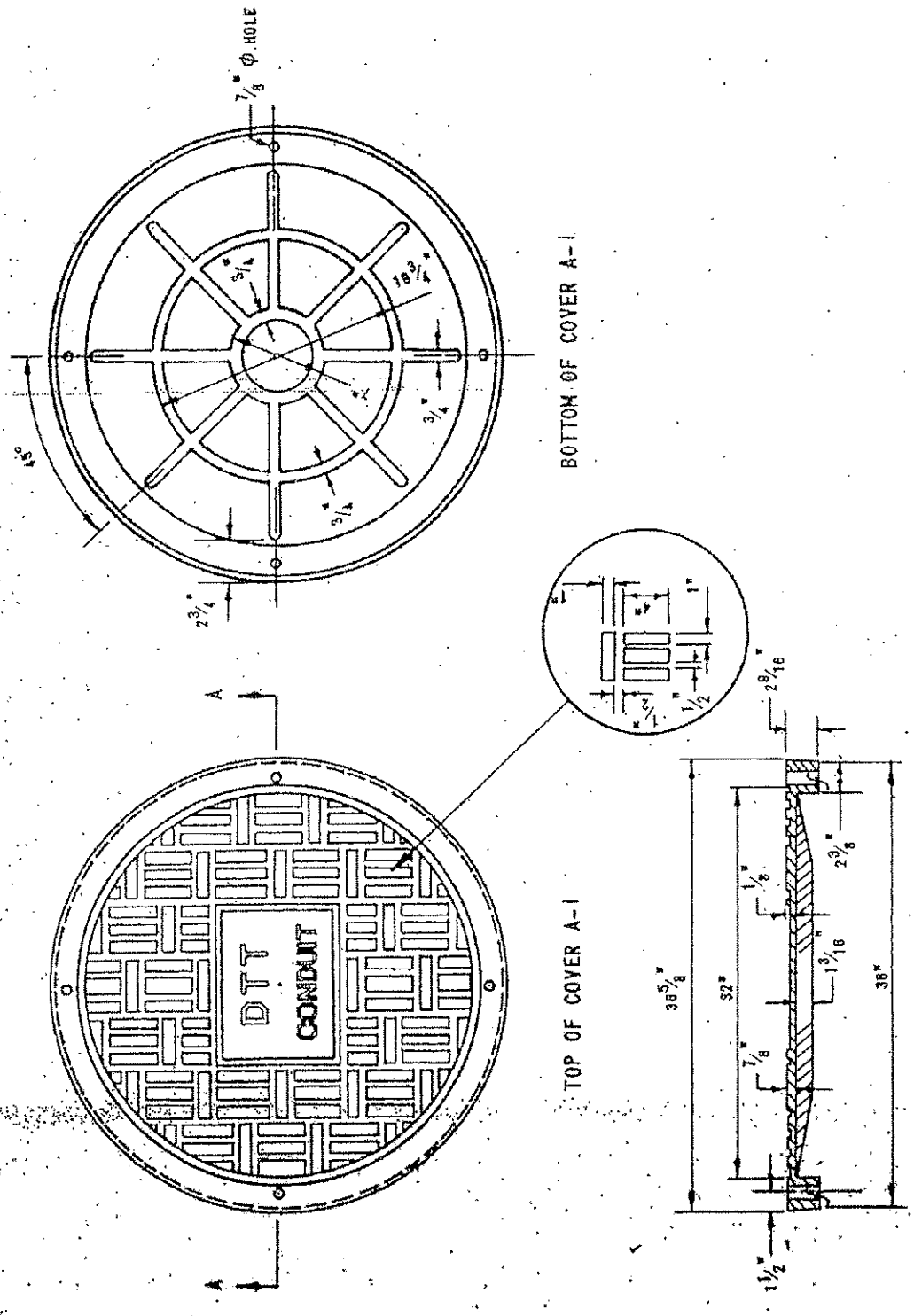

STANDARD MANHOLE FRAME
SEE BC-825.13

NOTE:
AVERAGE WEIGHT OF MANHOLE COVER - APPROX. 323 LBS.

CITY OF BALTIMORE DEPARTMENT OF PUBLIC WORKS		FHWA WASHINGTON OFFICE	MANHOLE - CONDUIT STANDARD COVER - DTT
APPROVED: C. Edward Walter HEAD, BUREAU OF ENGINEERING	ISSUED 9-10-73 REVISED		CATEGORY CODE 82501-09; 82510
DETAIL NO. BC-825.14			SCALE: NONE SHEET 1 OF 1

F.A.P. NO STP-3057 (4)N
SHA CONTRACT NO: BC320-001-815
BALTIMORE CITY CONTRACT NO. TR08310

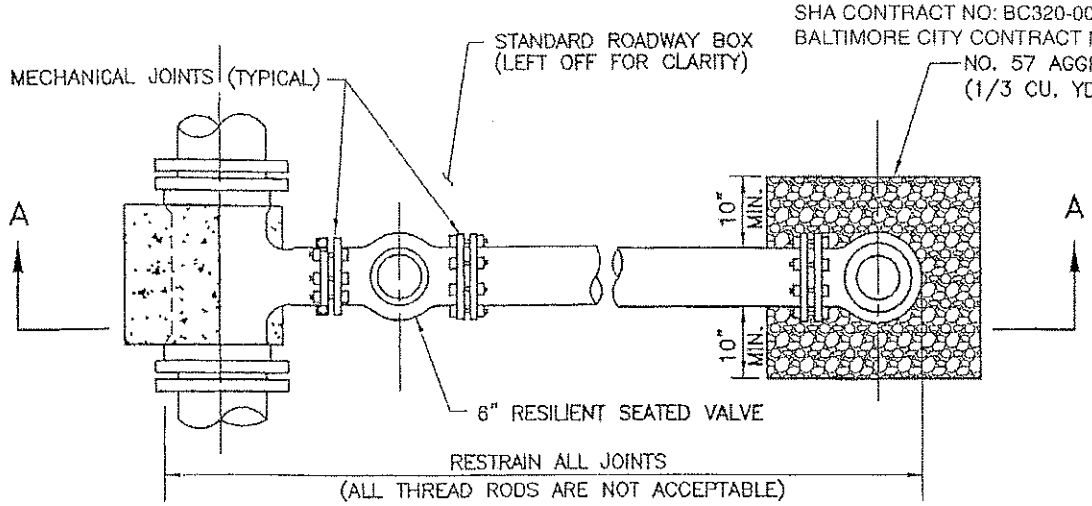

PLAN

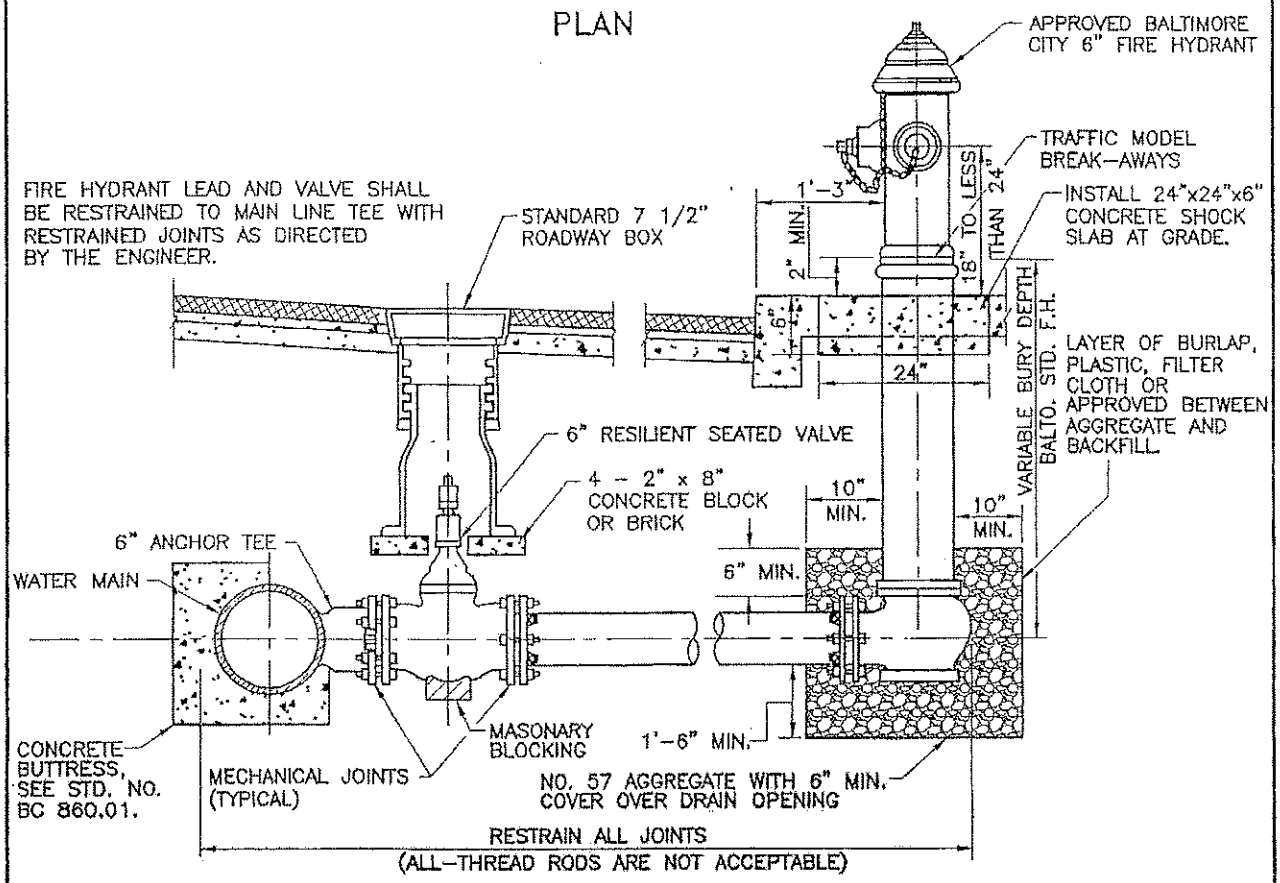

NOTES: 1. BALTIMORE STANDARD FIRE HYDRANT HAS VARIABLE BURY DEPTH, ANY VERTICAL ADJUSTMENT SHALL BE MADE USING BALTIMORE STD. FIRE HYDRANT EXTENSION PIECES.

2. CONCRETE SHALL BE MIX 3.

SECTION A-A

	APPROVED: HEAD, BUREAU OF WATER AND WASTEWATER / DIRECTOR, DEPARTMENT OF PUBLIC WORKS	CITY OF BALTIMORE DEPARTMENT OF PUBLIC WORKS BUREAU OF WATER AND WASTEWATER	ISSUED	REVISED	REVISED
			3 / 2008		
		STANDARD INSTALLATION OF FIRE HYDRANT WITH TEE AND VALVE (ROADWAY BOX)	DETAIL NO. BC 833.02		
			SCALE: NONE	SHEET 1 OF 1	

1.1.1 Placing the machine on an existing concrete foundation

The *narrow* base is attached directly to the foundation using **4** expansion bolts or the like. Maximum bolt diameter is **12** mm.

The bottom plate extends 1.5 mm below the housing of the base meaning that you can place the base directly on top of the foundation.

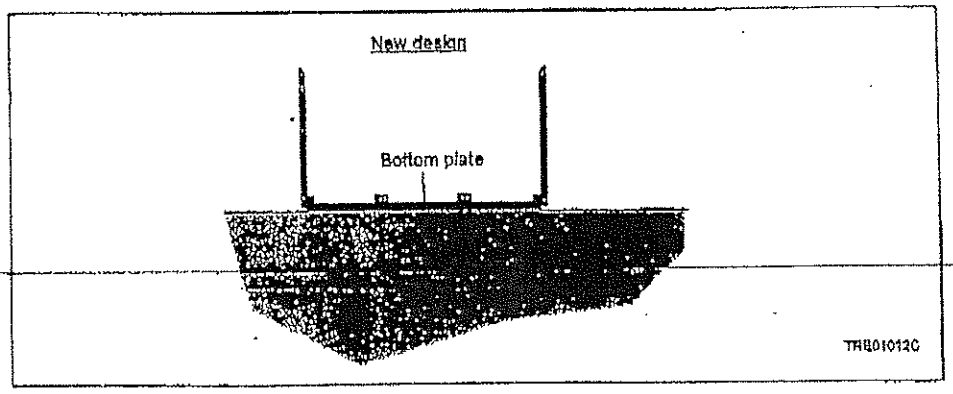

Figure 1. Machine placed directly on the foundation

Use 8 expansion bolts or similar. Maximum bolt diameter is **12** mm.

/// **Avstånd till vägg OK?** *///*

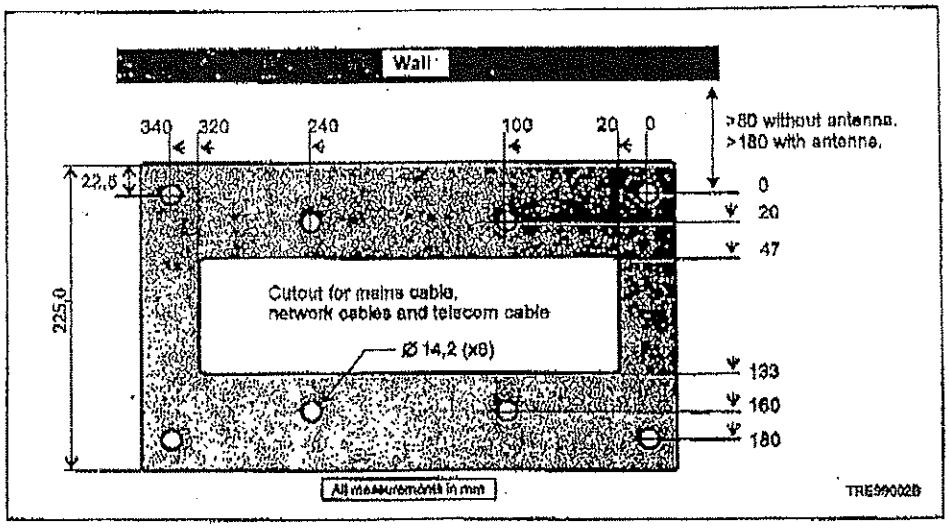

Figure 2. Hole position drawing.

Note that it must be possible to remove the ticket machine to move it or replace it.

Cable for connection to the power grid is drawn through the floor (from the floor below, for example) and into the base through the opening in the mounting frame (optional). Alternatively, a hole can be drilled in the base and the cables drawn in some other way. The cable must be protected against damage. Use proper cable bushing to prevent cable wear and moisture entry into the base.

⚠ **DANGER!** – Follow local regulations regarding electrical installations.

1.1.2 Pouring a new concrete foundation

If the installation site does not have an existing concrete base or the equivalent, you can pour a concrete foundation, casting a base anchor (0403-B0120) into position.

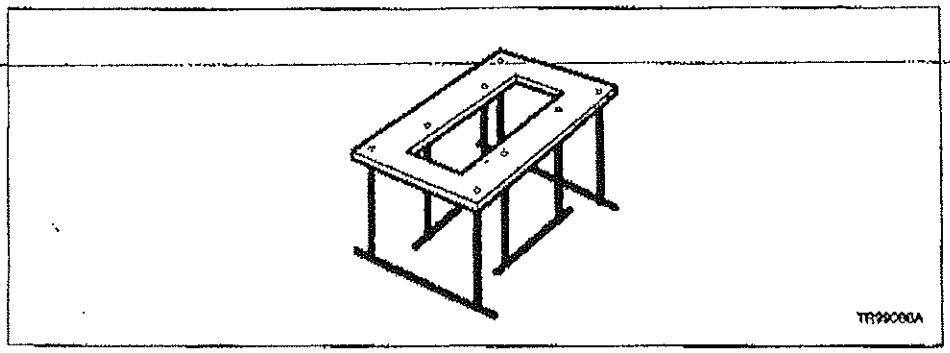

Figure 3. Base anchor 0403-B0120.

1.2 Installing the ticket machine

1.2.1 Putting the machine in place

⚠ WARNING! – The machine weighs over 75–85 kg. If a hoist is unavailable, at least three people should lift it into place.

⚠ WARNING! – Before the machine has been screwed to the foundation, there is a risk that it may tip forward when the door opens.

1. Place the machine on the site that has been prepared. See Section **Error! Reference source not found.** for instructions on preparing the installation site.
2. Fasten the machine with 4–8 expansion bolts (or 4–8 screws M6S 12 x 25 if base anchor 0403-B0120 was used when the foundation was poured).

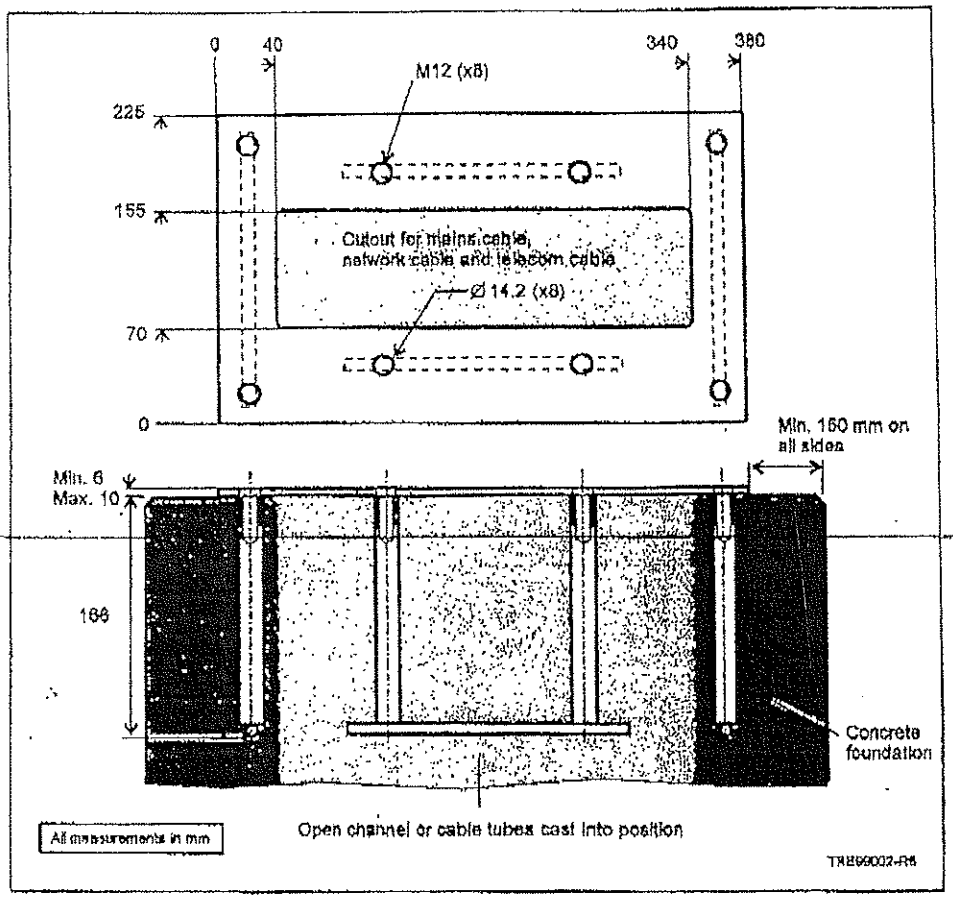

Figure 4. Base anchor

If the power source for the machine will be the grid power supply, a duct must be cast in the concrete foundation so that cable can be drawn in through the bottom of the base. You can cast a plastic pipe in place, or use a piece of wood that is removed after the concrete has hardened.

⚠ **DANGER!** – Follow local regulations regarding electrical installations.

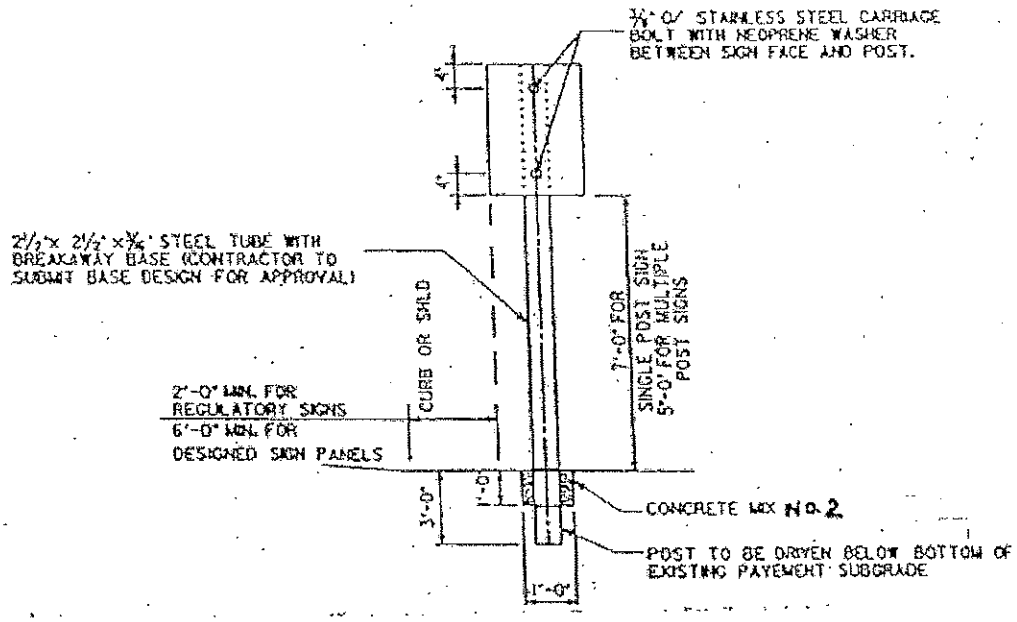

SINGLE POST SUPPORT

CITY OF BALTIMORE DEPARTMENT OF PUBLIC WORKS			FHWA WASHINGTON OFFICE	SIGN POST SUPPORT
APPROVED: HEAD, BUREAU OF ENGINEERING	ISSUED			CATEGORY CODE:
DETAIL No.	REVISED			SCALE: NONE / SHEET 1

BORING LOGS

INCLUDED IN THIS SECTION ARE SOIL BORING LOGS PERFORMED WITHIN THE PROJECT AREAS.

F.A.P. NO STP-3057 (4)N
SHA CONTRACT NO: BC320-001-815
BALTIMORE CITY CONTRACT NO. TR08310

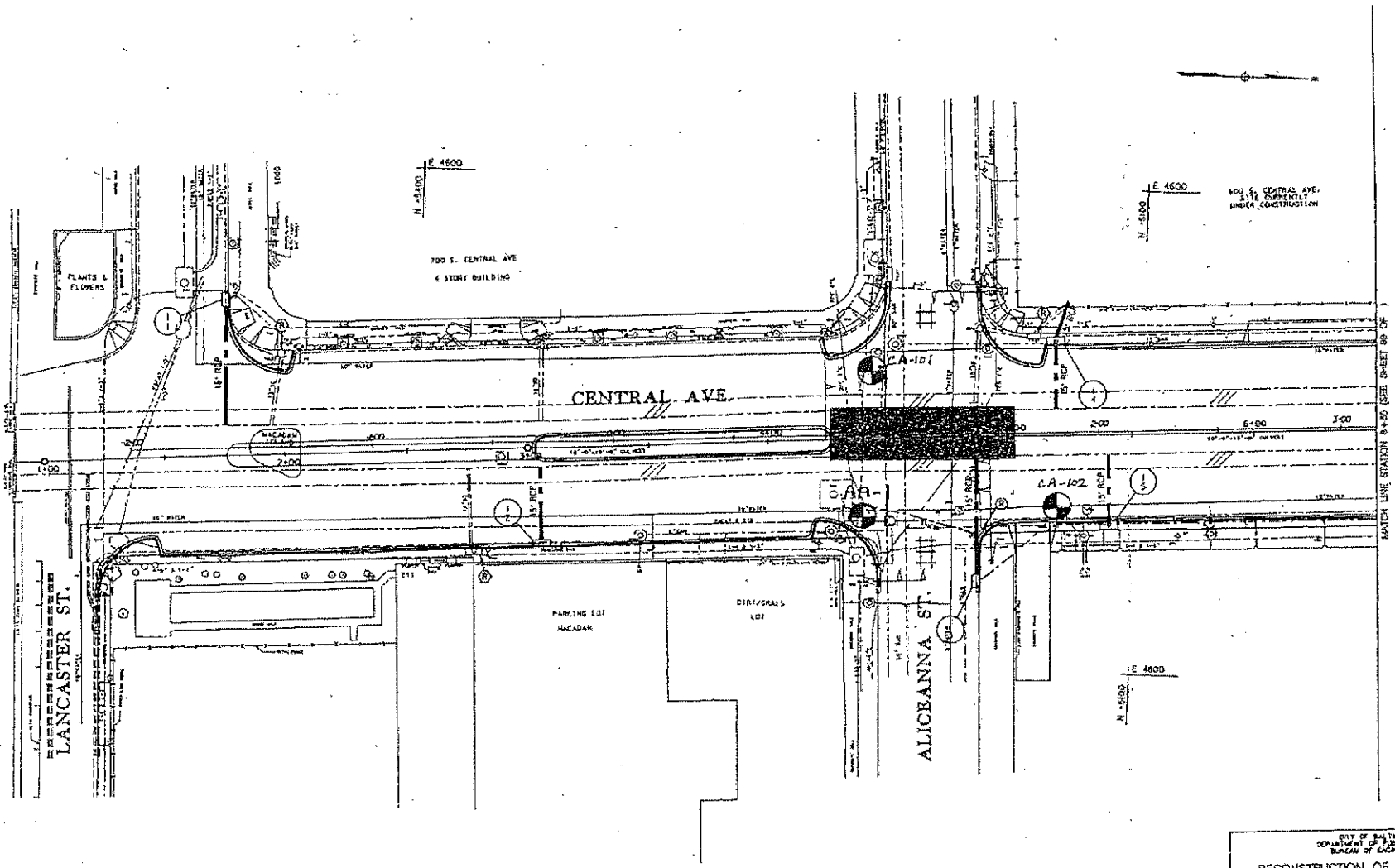

LEGEND

- PROPOSED STORM DRAIN
- PROPOSED ROOF DRAIN
- PROPOSED BOX CULVERT
- PROPOSED 48" STORM DRAIN
- (R) REMOVE EXISTING INLET

CITY OF BALTIMORE
DEPARTMENT OF PUBLIC WORKS
BUREAU OF ENGINEERING

RECONSTRUCTION OF CENTRAL AVENUE
FROM LANCASTER STREET TO
200' NORTH OF MADISON STREET
CONTRACT No. TR00017

STORM DRAIN PLAN
STA. 1+00 TO STA. 6+50

SCALE: 1"=20'

DATED: FEB. 1, 2000

SHEET 3A OF

542

F.A.P. NO STP-3057 (4)N
SHA CONTRACT NO: BC320-001-815
BALTIMORE CITY CONTRACT NO. TR08310

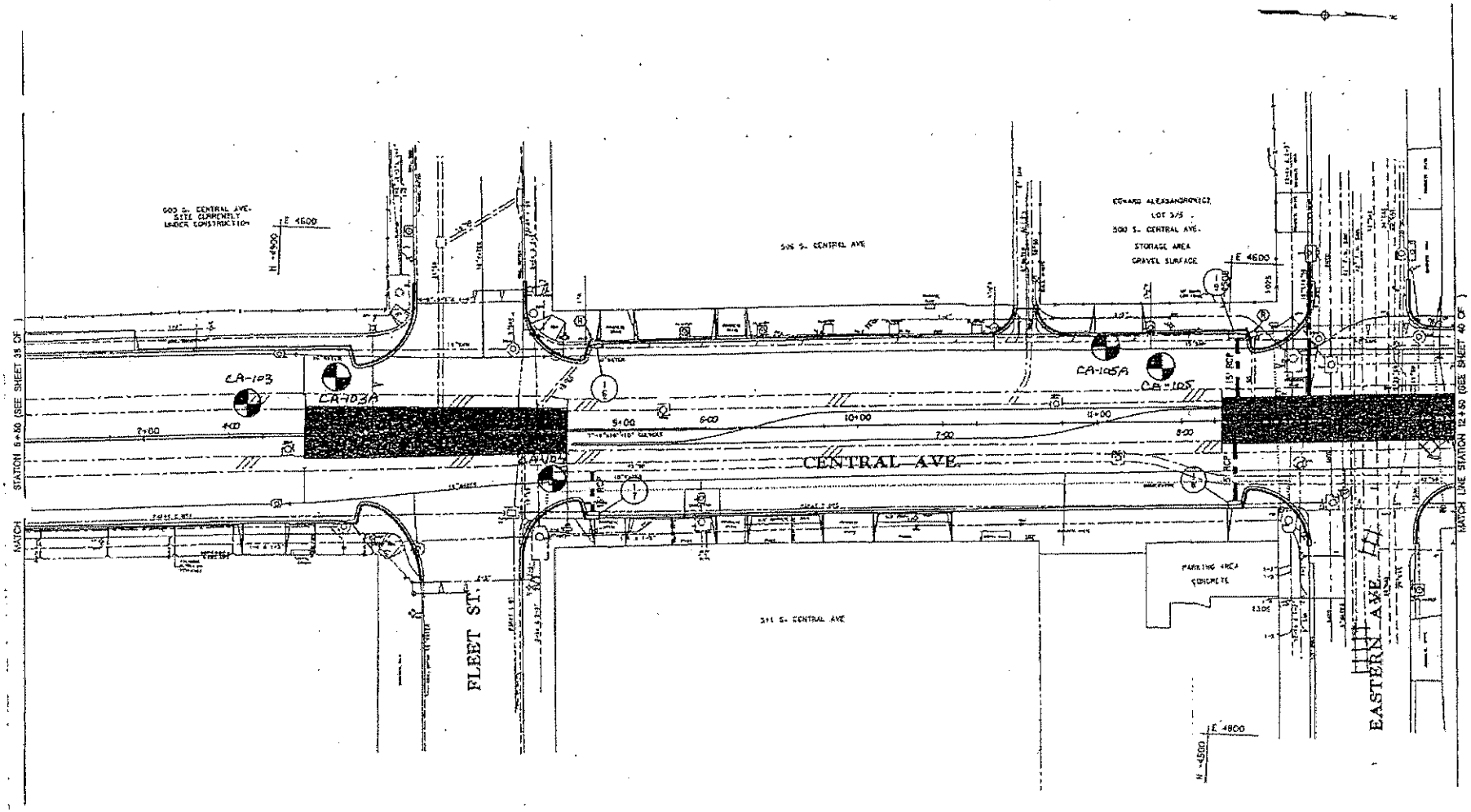

LEGEND

- PROPOSED STORM DRAIN
- PROPOSED ROOF DRAIN
- PROPOSED BOX CULVERT
- PROPOSED 48" STORM DRAIN
- (R) REMOVE EXISTING INLET

CITY OF BALTIMORE
DEPARTMENT OF PUBLIC WORKS
BUREAU OF ENGINEERING

RECONSTRUCTION OF CENTRAL AVENUE
FROM LANCASTER STREET TO
200' NORTH OF MADISON STREET
CONTRACT No. TR00017

STORM DRAIN PLAN
STA. 5+50 TO STA. 12+50

SCALE: 1"=20'

DATE: FEB. 1, 2006

SHEET 39 OF

543

F.A.P. NO STP-3057 (4)N
SHA CONTRACT NO: BC320-001-815
BALTIMORE CITY CONTRACT NO. TR08310

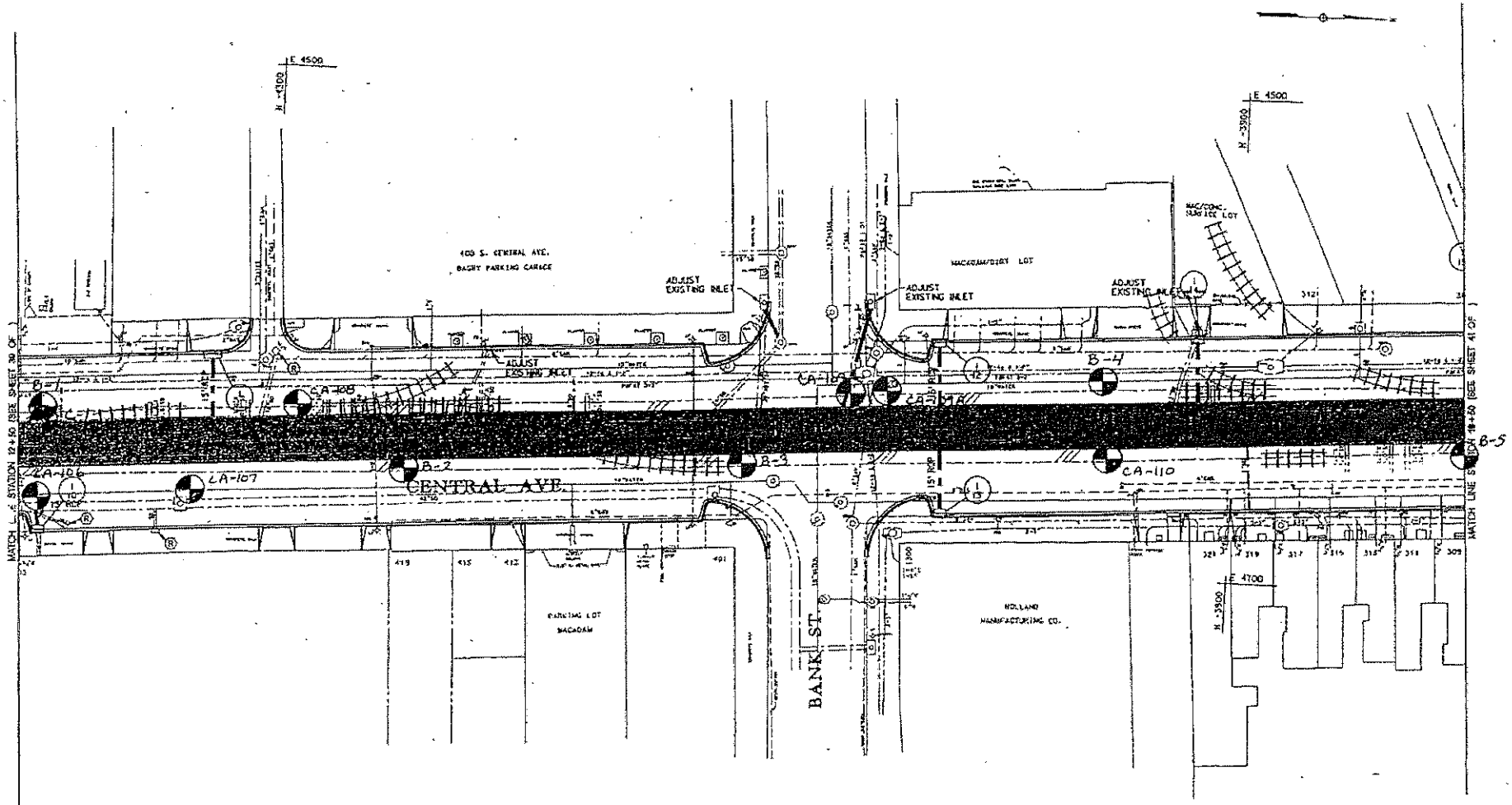

LEGEND

- PROPOSED STORM DRAIN
- PROPOSED ROOF DRAIN
- PROPOSED BOX CULVERT
- PROPOSED 48" STORM DRAIN
- (R) REMOVE EXISTING INLET

CITY OF BALTIMORE
DEPARTMENT OF PUBLIC WORKS
BUREAU OF ENGINEERING

RECONSTRUCTION OF CENTRAL AVENUE
FROM LANCASTER STREET TO
200' NORTH OF MADISON STREET
CONTRACT No. TR00017

STORM DRAIN PLAN
STA. 12+50 TO STA. 18+50

SCALE: 1"=20'

DATE: FEB. 1, 2000

SHEET 40 OF

544

F.A.P. NO STP-3057 (4)N
SHA CONTRACT NO: BC320-001-815
BALTIMORE CITY CONTRACT NO. TR08310

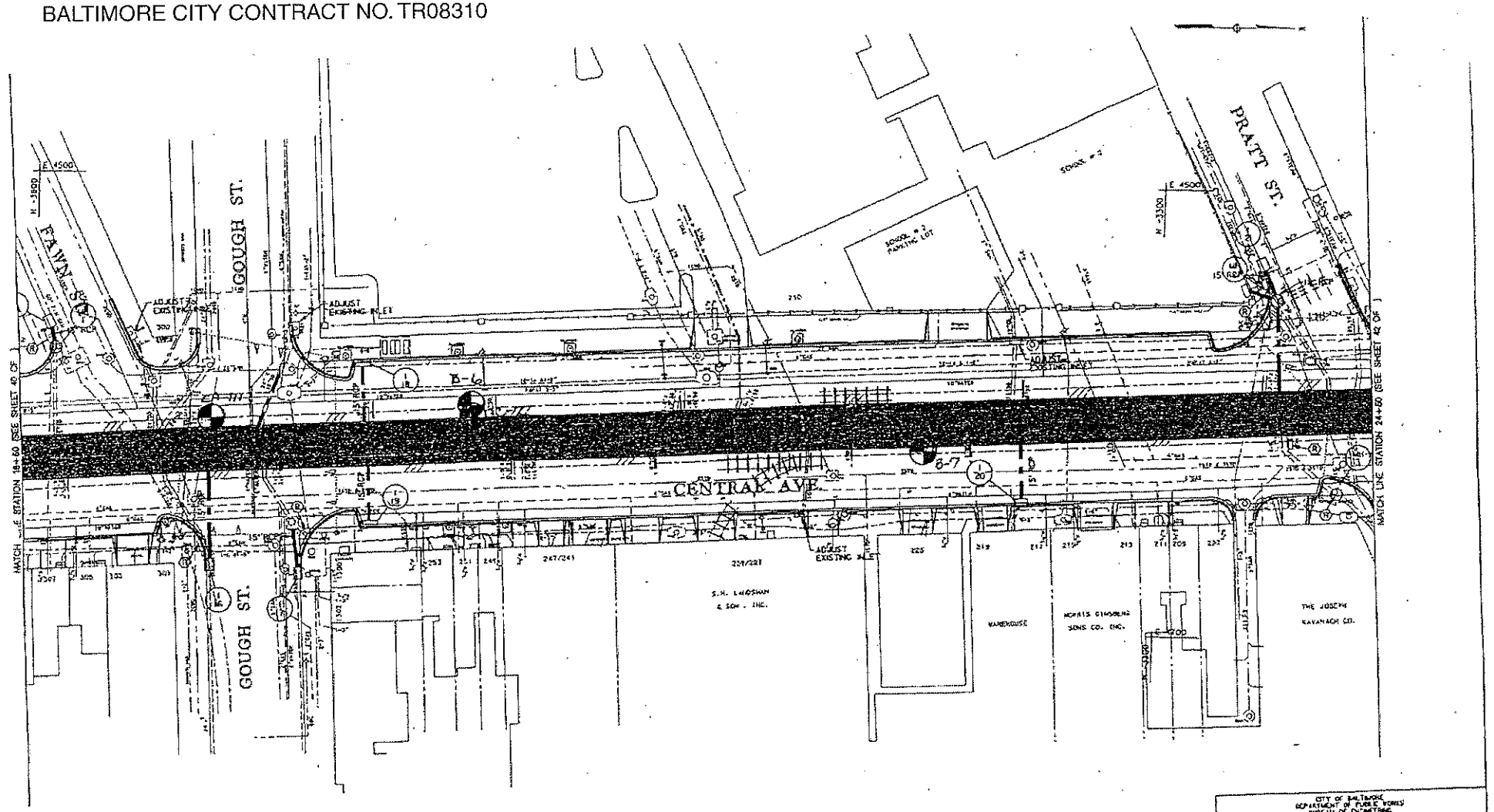

LEGEND

- PROPOSED STORM DRAIN
- PROPOSED ROOF DRAIN
- PROPOSED BOX CULVERT
- PROPOSED 48" STORM DRAIN
- (R) REMOVE EXISTING INLET

CITY OF BALTIMORE
DEPARTMENT OF PUBLIC WORKS
BUREAU OF ENGINEERING

RECONSTRUCTION OF CENTRAL AVENUE
FROM LANCASTER STREET TO
200' NORTH OF MADISON STREET
CONTRACT No. TR00017

STORM DRAIN PLAN
STA 18+50 TO STA 24+50

SCALE: 1"=20'
DATE: FEB. 1, 2000
SHEET 41 OF

F.A.P. NO STP-3057 (4)N
SHA CONTRACT NO: BC320-001-815
BALTIMORE CITY CONTRACT NO. TR08310

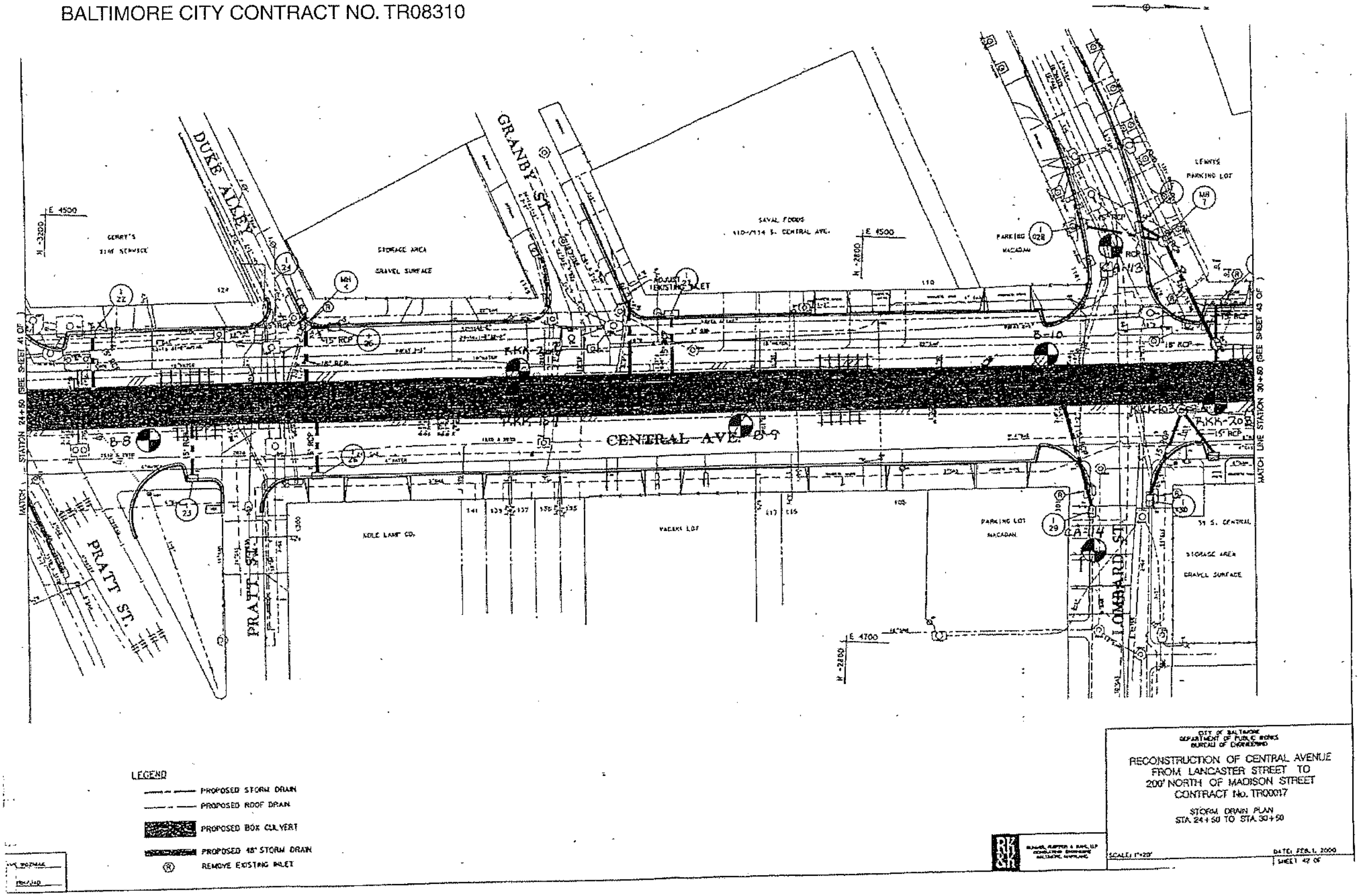

F.A.P. NO STP-3057 (4)N
SHA CONTRACT NO: BC320-001-815
BALTIMORE CITY CONTRACT NO. TR08310

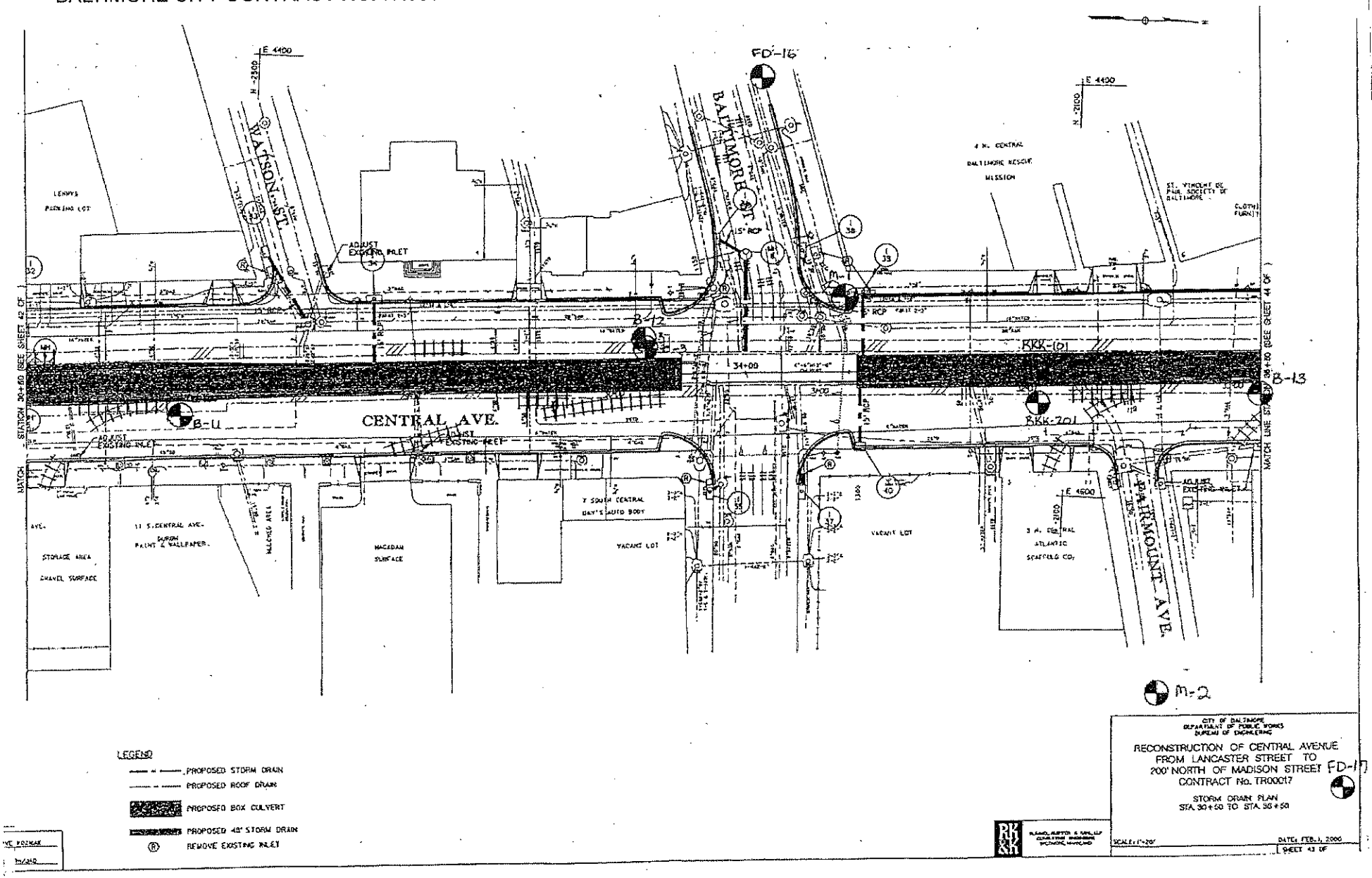

F.A.P. NO STP-3057 (4)N
SHA CONTRACT NO: BC320-001-815
BALTIMORE CITY CONTRACT NO. TR08310

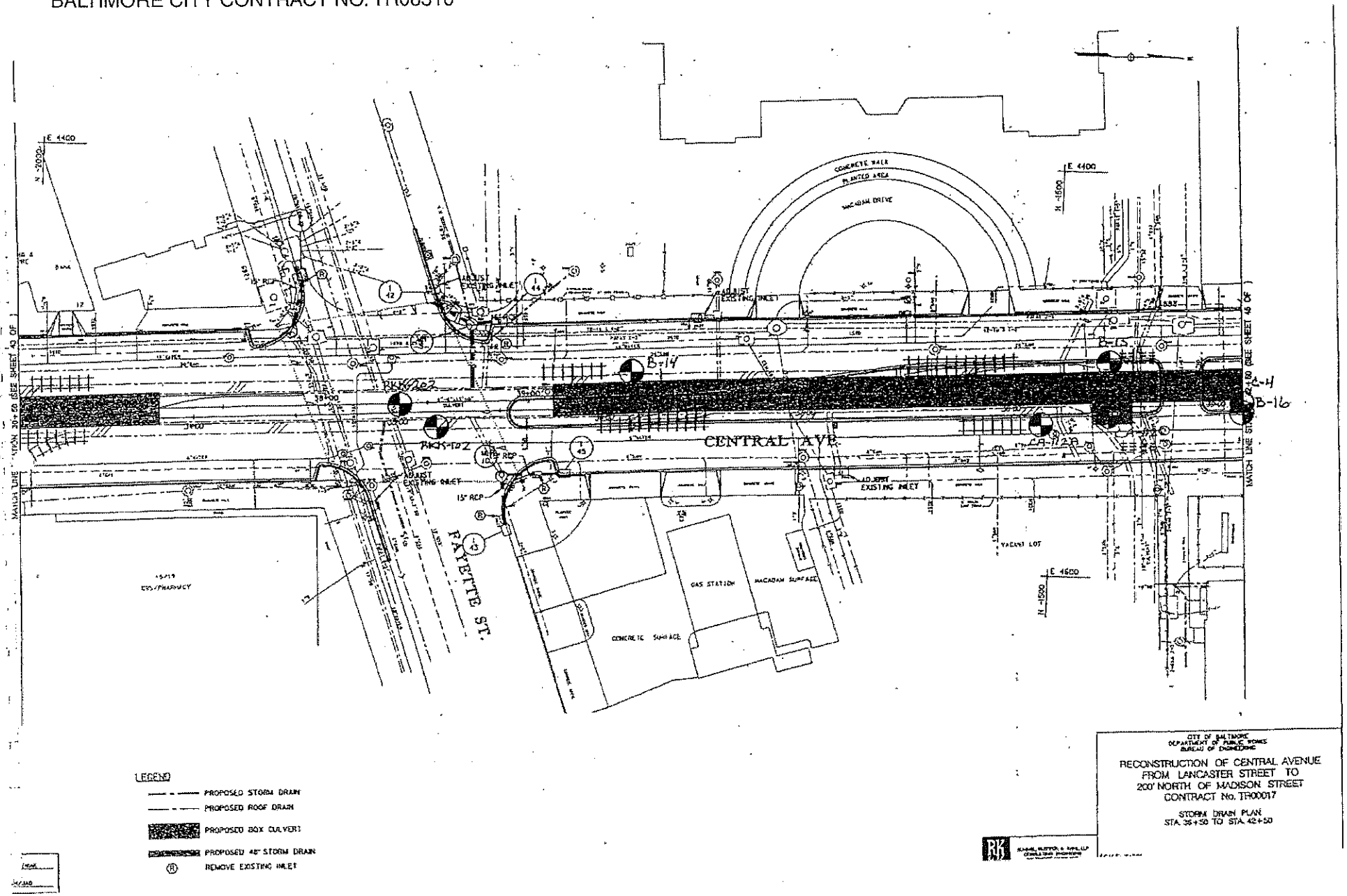

LEGEND

- PROPOSED STORM DRAIN
- PROPOSED ROOF DRAIN
- PROPOSED BOX CULVERT
- PROPOSED 48" STORM DRAIN
- (R) REMOVE EXISTING INLET

CITY OF BALTIMORE
DEPARTMENT OF PUBLIC WORKS
BUREAU OF ENGINEERING

RECONSTRUCTION OF CENTRAL AVENUE
FROM LANCASTER STREET TO
200' NORTH OF MADISON STREET
CONTRACT No. TR00017

STORM DRAIN PLAN
STA. 36+50 TO STA. 42+50

F.A.P. NO STP-3057 (4)N
SHA CONTRACT NO: BC320-001-815
BALTIMORE CITY CONTRACT NO. TR08310

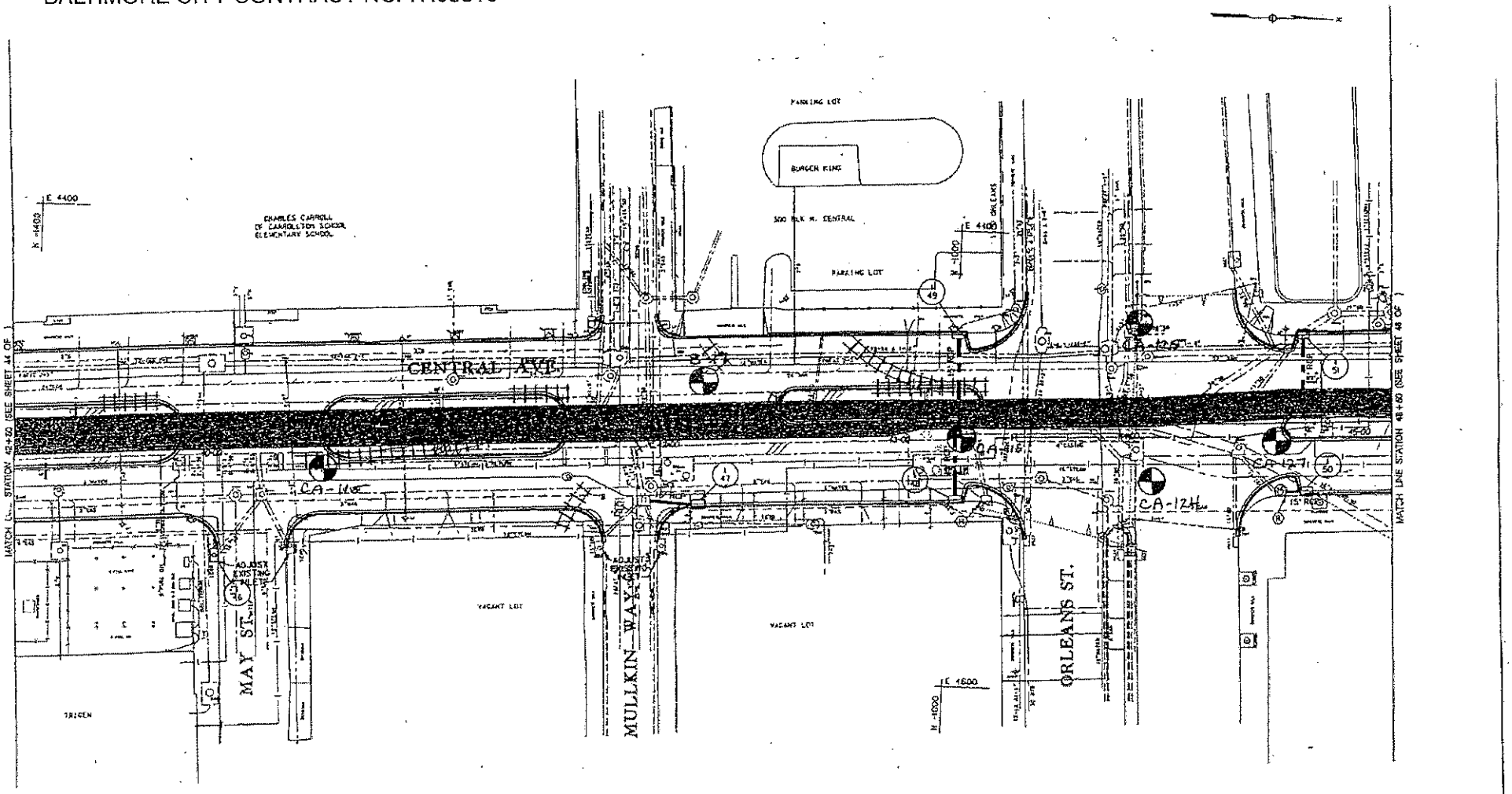

LEGEND

- PROPOSED STORM DRAIN
- PROPOSED ROOF DRAIN
- PROPOSED BOX CULVERT
- PROPOSED 48" STORM DRAIN
- (R) REMOVE EXISTING INLET

CITY OF BALTIMORE
DEPARTMENT OF PUBLIC WORKS
BUREAU OF ENGINEERING

RECONSTRUCTION OF CENTRAL AVENUE
FROM LANCASTER STREET TO
200' NORTH OF MADISON STREET
CONTRACT No. TR00017

STORM DRAIN PLAN
STA. 42+50 TO STA. 48+50

SCALE: 1"=20'

DATE: FEB. 1, 2000

SHEET 45 OF

F.A.P. NO STP-3057 (4)N
SHA CONTRACT NO: BC320-001-815
BALTIMORE CITY CONTRACT NO. TR08310

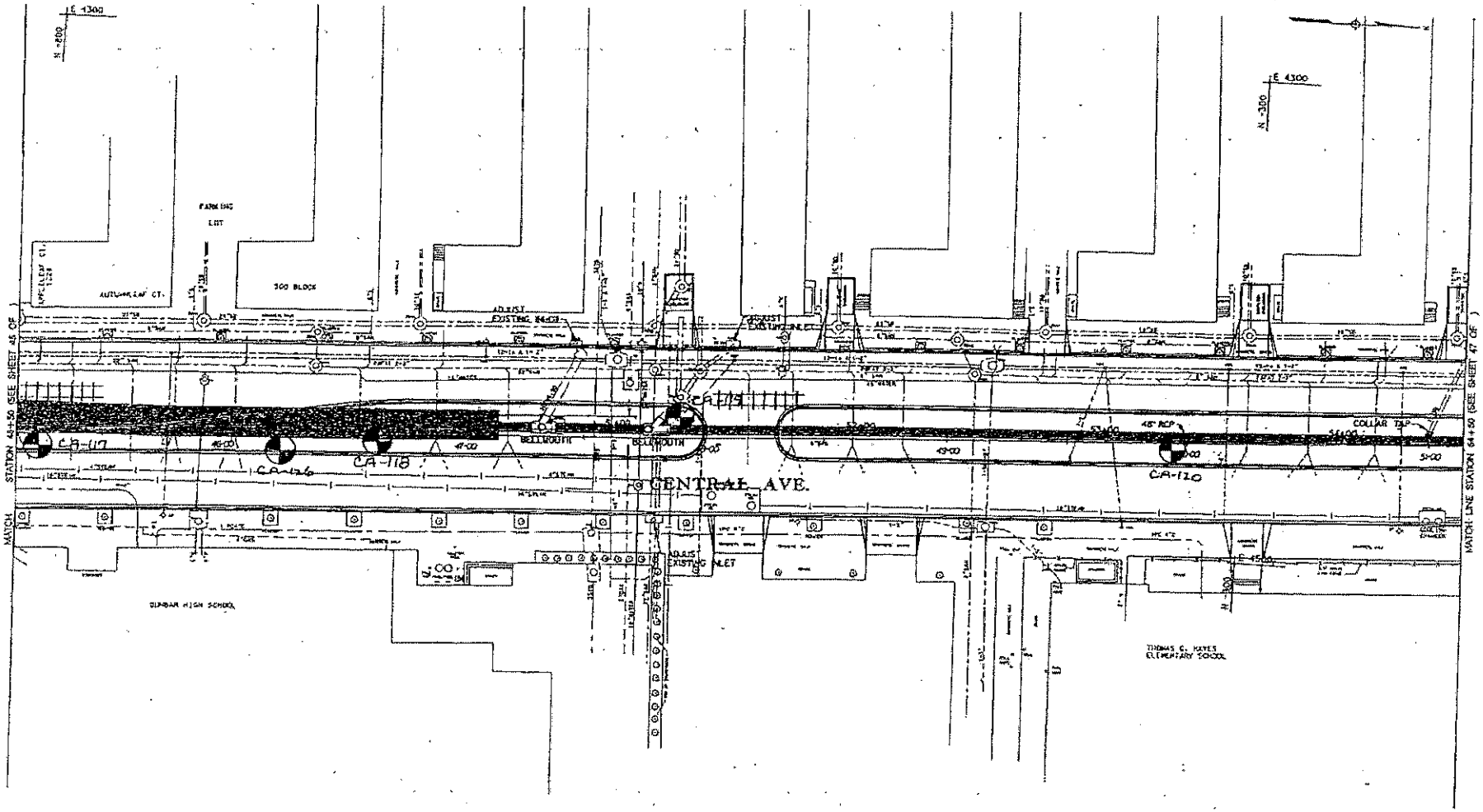

LEGEND

- PROPOSED STORM DRAIN
- PROPOSED ROOF DRAIN
- PROPOSED BOX CULVERT
- PROPOSED 48" STORM DRAIN
- (R) REMOVE EXISTING INLET

CITY OF BALTIMORE
DEPARTMENT OF PUBLIC WORKS
BUREAU OF ENGINEERING

RECONSTRUCTION OF CENTRAL AVENUE
FROM LANCASTER STREET TO
200' NORTH OF MADISON STREET
CONTRACT No. TR000017

STORM DRAIN PLAN
STA. 48+50 TO STA. 54+50

SCALE: 1"=20'

DATE: FEB. 1, 2000

RK&K

F.A.P. NO STP-3057 (4)N
SHA CONTRACT NO: BC320-001-815
BALTIMORE CITY CONTRACT NO. TR08310

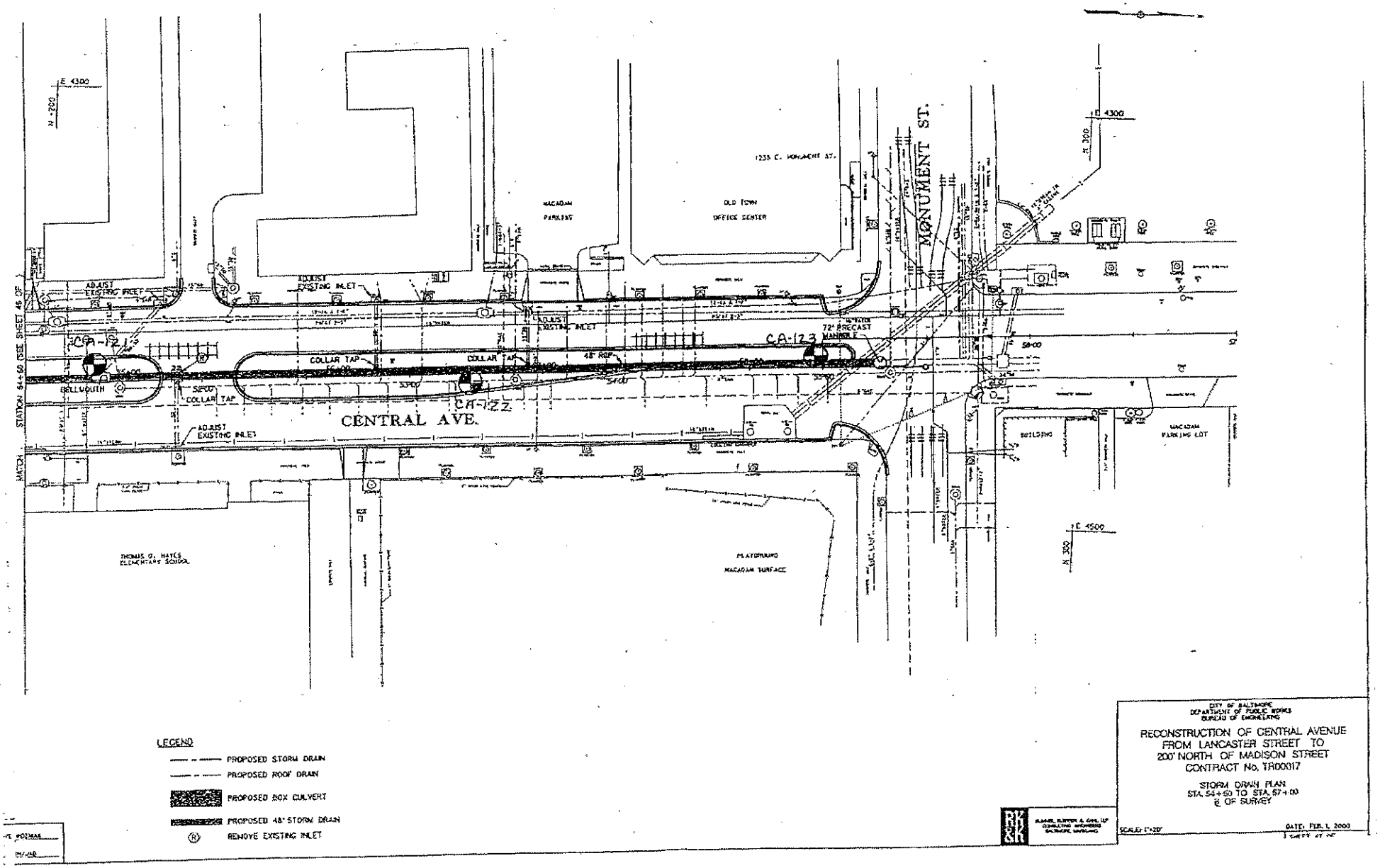

RECORD OF SOIL EXPLORATION

page 1 of 2

KIDDE CONSULTANTS, INC.

Project Name: Central Avenue — Boring: B-1
Location: Baltimore City, MD — Job: 3-85-100
Sta. 12+60, 15.5' Lt.
Sampler: 140 Lbs. — Hammer Wt. — Hammer Drop 30 in. — Surf. Elev. — Ft. — Pipe Size 2"OD in. — Started 7-18-85
Hole Diameter: 8" — Rock Core Dia: X — Boring Method: HSA
Foreman: C.Walker — Inspector: — Date Completed: 7-18-85

Soil Description	Strat. Depth	Depth Scale	Sample Cond.	Blows/6"	No.	Type	Rec.	Boring & Sampling Notes
SURFACE	0.0							
1" blacktop over 3" cobbles 4" concrete	2.0		D	2 1-2	1	DS	14"	boring attempted to run-up at 25.0'-30.0' - 35.0' and 40.0'
Brown moist soft fine sand with trace silt (fill)	8.0	5	D	2 1-1	2	DS	16"	
Black gray moist soft slightly organic.	17.5	10	I	1 1-1	3	DS	16"	
Black moist silty sand	16.0	15	I	1 1-6	4A 4B	DS	14"	
Brown wet medium dense to very dense coarse sand and gravel		20	D	6 7-6	5	DS	14"	
		25	D	5 3-2	6	DS	14"	
		30	D	13 51 27-4"	7	DS	10"	
	37.0	35	D	12 17-50	8	DS	14"	
Brown wet very dense medium sand								

Sampler Type: SS = Standard Split Spoon; PT = Thin-Walled Shelby Tube; CA = Continuous Flight Auger; HS = Hand Sample
Sample Conditions: D = Disturbed; U = Undisturbed; I = Intact
Ground Water Depth: at completion 12.0 ft.; after ___ hrs. ___ ft.; after ___ days ___ ft.
Boring Method: HSA = Hollow Stem Auger; CFA = Continuous Flight Auger; RC = Rotary Core; HS = Hand Sampling

STANDARD PENETRATION TEST-DRIVING 2" OD SAMPLER 1' WITH 140# HAMMER FALLING 30"; COUNT MADE AT 6" INTERVALS

sheet 2 of 2

RECORD OF SOIL EXPLORATION

page 1 of 2

KIDDE CONSULTANTS, INC.

Project Name: Central Avenue — Boring: B-2
Location: Baltimore City, Maryland — Job: 3-85-100
Sta. 14+10, 14.0' Rt.
Sampler: 140 Lbs. — Hammer Wt. — Hammer Drop 30 in. — Surf. Elev. — Ft. — Pipe Size 2"OD in. — Started 7-9-85
Hole Diameter: 8" — Rock Core Dia: X — Boring Method: HSA
Foreman: C.Walker — Inspector: — Date Completed: 7-9-85

Elev.	Soil Description	Strat. Depth	Depth Scale	Sample Cond.	Blows/6"	No.	Type	Rec.	Boring & Sampling Notes
	SURFACE	0.0							
	Brown moist medium dense coarse silty sand and gravel, cobbles and brick (fill)	4.0		D	6 7-6	1	DS	14"	1" blacktop 6" cobblestone
	Brown and gray moist silt with trace fine sand	8.0	5	I	3 3-3	2	DS	6"	
	Dark gray medium stiff organic silt with sand lenses	12.0	10	I	3 1-2	3	DS	18"	very difficult augering 0.0 to 5.0'
	Dark gray to brown wet medium dense coarse silty sand and gravel	17.5	15	D	3 4-6	4	DS	4"	water on rods at 8.5'
	Brown wet medium dense coarse sand with some rock and gravel		20	D	3 6-7	5	DS	6"	very difficult augering 15.0 to 28.0'
			25	D	9 11-14	6	DS	16"	very hard augering 28.0 to 40.0'
	Light brown and tan wet very dense medium to fine sand	28.0	30	I	25 30-30	7	DS	16"	
			35	D	12 30-51	8	DS	16"	

Sampler Type: SS = Standard Split Spoon; PT = Thin-Walled Shelby Tube; CA = Continuous Flight Auger; HS = Hand Sample
Sample Conditions: D = Disturbed; U = Undisturbed; I = Intact
Ground Water Depth: at completion 3.0 ft.; after ___ hrs. ___ ft.; after ___ days ___ ft.
Boring Method: HSA = Hollow Stem Auger; CFA = Continuous Flight Auger; RC = Rotary Core; HS = Hand Sampling

STANDARD PENETRATION TEST-DRIVING 2" OD SAMPLER 1' WITH 140# HAMMER FALLING 30"; COUNT MADE AT 6" INTERVALS

page 2 of 2

RECORD OF SOIL EXPLORATION

KIDDE CONSULTANTS, INC.

Project Name: Central Avenue — Boring: B-1
Location: Baltimore City, MD — Job: 3-85-100
Sta. 12+60, 15.5' Lt.
Sampler: 140 Lbs. — Hammer Wt. — Hammer Drop 30 in. — Surf. Elev. — Ft. — Pipe Size 2"OD in. — Started 7-18-85
Hole Diameter: 8" — Rock Core Dia: X — Boring Method: HSA
Foreman: C.Walker — Inspector: — Date Completed: 7-18-85

Elev.	Soil Description	Strat. Depth	Depth Scale	Sample Cond.	Blows/6"	No.	Type	Rec.	Boring & Sampling Notes
	SURFACE	0.0							
	Brown wet very dense medium sand	41.5		D	10 20-45	9	DS	13"	
			45						
	bottom of test hole at 41.5'								

RECORD OF SOIL EXPLORATION

KIDDE CONSULTANTS, INC.

Project Name: Central Avenue — Boring: B-2
Location: Baltimore City, MD — Job: 3-85-100
Sta. 14+10, 14.0' Rt.
Sampler: 140 Lbs. — Hammer Wt. — Hammer Drop 30 in. — Surf. Elev. — Ft. — Pipe Size 2"OD in. — Started 7-9-85
Hole Diameter: 8" — Rock Core Dia: X — Boring Method: HSA
Foreman: C.Walker — Inspector: — Date Completed: 7-9-85

Elev.	Soil Description	Strat. Depth	Depth Scale	Sample Cond.	Blows/6"	No.	Type	Rec.	Boring & Sampling Notes
	SURFACE	0.0							
	Light brown and tan wet very dense med. to fine sand	41.5		D	12 34-31	9	DS	16"	
			45						
	bottom of test hole at 41.5'								

F.A.P. NO STP-3057 (4)N
SHA CONTRACT NO: BC320-001-815
BALTIMORE CITY CONTRACT NO. TR08310

RECORD OF SOIL EXPLORATION

KIDDE CONSULTANTS, INC.

Project Name: Central Avenue — Boring: B-1
Location: Baltimore City, MD — Job: 1-85-100

Sta. 15+50, 14.75' Rt. SAMPLER
Datum: — Hammer Wt. 140 Lbs. — Hole Diameter 8" — Foreman C.Walker
Surf. Elev. 7' Ft. — Hammer Drop 30 In. — Rock Core Dia X — Inspector
Date Started 7-8-85 — Pipe Size 2"OD In. — Boring Method HSA — Date Completed 7-8-85

ELEV.	SOIL DESCRIPTION (Color, Moisture, Density, Plasticity, Soil, Proportions)	STRA. DEPTH	DEPTH SCALE	SAMPLE COND	Blows/6"	NO.	TYPE	REC.	BORING & SAMPLING NOTES
	SURFACE	0.0							
	Dark brown moist medium dense fine sand with silt and brick fill with wood and cinders	3.6		D	12 9-6	1	DS	14"	6" blacktop
	Brown moist loose to medium dense medium to coarse silty sand and gravel fill with traces of wood (fill)	9.5	5	D	4 2-2	2	DS	8"	
	Wood	13.0	10	D	51 10-6"	3	DS	6"	
	Dark gray wet loose medium silty sand with wood (possible fill)	16.0	15	D	1 2-10	4	DS	14"	Water on rods at 10.0'
	Brown wet medium dense coarse sand and gravel		20	D	14 18-17	5	DS	16"	wood layer from 10.0 to 11.0'
			25	D	6 14-17	6	DS	18"	
	Light tan moist very dense fine sandy silt	28.0	30	D	15 30-40	7	DS	16"	
			35	D	20 32-20	8	DS	14"	
	Tan and gray moist very dense silt	37.5							

SAMPLER TYPE: DS = Denison Split Spoon; PS = Pitcher Sample Tube; SS = Standard Split Spoon; RC = Rock Core
SAMPLE CONDITIONS: D = Disturbed; U = Undisturbed; L = Lost
GROUND WATER DEPTH: At completion 8.5 Ft.; After 24 Hrs. Ft.
BORING METHOD: HSA = Hollow Stem Auger; CFA = Continuous Flight Auger; RC = Rotary Core; HA = Hand Auger

STANDARD PENETRATION TEST-DRIVING 2" OD SAMPLER 18" 1" WITH 140# HAMMER FALLING 30"; COUNT MADE AT 6" INTERVALS

RECORD OF SOIL EXPLORATION

KIDDE CONSULTANTS, INC.

Project Name: Central Avenue — Boring: B-2
Location: Baltimore City, MD — Job: 1-85-100

Sta. 17+00, 14.0' Lt. SAMPLER
Datum: — Hammer Wt. 140 Lbs. — Hole Diameter 8" — Foreman C.Walker
Surf. Elev. Ft. — Hammer Drop 30 In. — Rock Core Dia X — Inspector
Date Started 7-15-85 — Pipe Size 2"OD In. — Boring Method HSA — Date Completed 7-15-85

ELEV.	SOIL DESCRIPTION (Color, Moisture, Density, Plasticity, Soil, Proportions)	STRA. DEPTH	DEPTH SCALE	SAMPLE COND	Blows/6"	NO.	TYPE	REC.	BORING & SAMPLING NOTES
	SURFACE	0.0							
	Dark brown moist loose fine sand and gravel brick, cinders (fill)	3.5		D	4 6-4	1	DS	14"	2" asphalt 5" cobblestone
	Brown moist soft sandy silt trace gravel (fill)	8.0	5	D	2 2-2	2	DS	16"	
	Gray wet medium stiff fine to medium sand trace gravel	12.0	10	D	3 3-3	3	DS	14"	water on rods at 14.0'
	Brown wet medium dense coarse sand and gravel		15	D	5 4-7	4	DS	14"	
			20	D	8 15-12	5	DS	14"	
			25	D	8 15-21	6	DS	16"	
	Tan and light brown wet dense medium fine sand	28.0	30	D	9 17-23	7	DS	14"	
			35	D	9 18-23	8	DS	14"	
	Tan and gray moist hard silt with fine sand	37.0							

SAMPLER TYPE: DS = Denison Split Spoon; PS = Pitcher Sample Tube; SS = Standard Split Spoon; RC = Rock Core
SAMPLE CONDITIONS: D = Disturbed; U = Undisturbed; L = Lost
GROUND WATER DEPTH: At completion 17.0 Ft.; After Hrs. Ft.
BORING METHOD: HSA = Hollow Stem Auger; CFA = Continuous Flight Auger; RC = Rotary Core; HA = Hand Auger

STANDARD PENETRATION TEST-DRIVING 2" OD SAMPLER 18" 1" WITH 140# HAMMER FALLING 30"; COUNT MADE AT 6" INTERVALS

RECORD OF SOIL EXPLORATION

KIDDE CONSULTANTS, INC.

Project Name: Central Avenue — Boring: B-1
Location: Baltimore City, MD — Job: 1-85-100

Sta. 15+50, 14.75' Rt. SAMPLER
Datum: — Hammer Wt. 140 Lbs. — Hole Diameter 8" — Foreman C.Walker
Surf. Elev. Ft. — Hammer Drop 30 In. — Rock Core Dia X — Inspector
Date Started 7-8-85 — Pipe Size 2"OD In. — Boring Method HSA — Date Completed 7-8-85

ELEV.	SOIL DESCRIPTION (Color, Moisture, Density, Plasticity, Soil, Proportions)	STRA. DEPTH	DEPTH SCALE	SAMPLE COND	Blows/6"	NO.	TYPE	REC.	BORING & SAMPLING NOTES
	SURFACE	0.0							
	Tan and gray moist very dense silt	40.5		D	31-3"	9	DS	8"	
	bottom of test hole at 40.5'		45						

RECORD OF SOIL EXPLORATION

KIDDE CONSULTANTS, INC.

Project Name: Central Avenue — Boring: B-2
Location: Baltimore City, MD — Job: 1-85-100

Sta. 17+00, 14.0' Lt. SAMPLER
Datum: — Hammer Wt. 140 Lbs. — Hole Diameter 8" — Foreman C.Walker
Surf. Elev. Ft. — Hammer Drop 30 In. — Rock Core Dia X — Inspector
Date Started 7-15-85 — Pipe Size 2"OD In. — Boring Method HSA — Date Completed 7-15-85

ELEV.	SOIL DESCRIPTION (Color, Moisture, Density, Plasticity, Soil, Proportions)	STRA. DEPTH	DEPTH SCALE	SAMPLE COND	Blows/6"	NO.	TYPE	REC.	BORING & SAMPLING NOTES
	SURFACE	0.0							
	Tan & gray moist hard silt with fine sand	41.5		D	18 30-55	9	DS	10"	
	bottom of test hold at 41.5'		45						

F.A.P. NO STP-3057 (4)N
SHA CONTRACT NO: BC320-001-815
BALTIMORE CITY CONTRACT NO. TR08310

DIVISION	CONSULTANT	CITY OF BALTIMORE DEPARTMENT OF PUBLIC WORKS & STATE HIGHWAY ADMINISTRATION OF MARYLAND INTERSTATE DIVISION FOR BALTIMORE CITY
	Purdum & Jeschke	RECONSTRUCTION OF CENTRAL AVENUE — DRAWN BY

RECORD OF SOIL EXPLORATION

KIDDE CONSULTANTS, INC.

Project Name: Central Avenue — Boring: B-5
Location: Baltimore City, MD — Job: 3-85-100

Sta. 18+50, 15.0' Rt.

SAMPLER
Datum: — Hammer Wt. 140 Lbs. — Hole Diameter 8" — Foreman C.Walker
Surf. Elev. — Ft. Hammer Drop 30 In. — Rock Core Dia — Inspector
Date Started 7-9-85 — Pipe Size 2"OD In. — Boring Method HSA — Date Completed 7-9-85

ELEV.	SOIL DESCRIPTION (Color, Moisture, Density, Plasticity, Soil, Proportions)	STRA. DEPTH	DEPTH SCALE	COND.	Blows/6"	NO.	TYPE	REC.	BORING & SAMPLING NOTES
	SURFACE	0.0							
	Gray moist medium dense fine sand and broken cobblestone with brick (fill)	4.0		D	8 10-9	1	DS	14"	1" blacktop 5" cobblestone
	Brown moist loose fine sand and gravel fill with brick	8.0	5	D	5 4-3	2	DS	14"	
	Gray moist soft organic silt with peat and sand lenses	11.0	10	I	1 2-1	3	DS	18"	
	Gray wet loose coarse sand	18.0	15	D	4 6-4	4	DS	14"	water on rods at 12.0'
	Brown wet medium dense to loose to dense medium to coarse sand some silt in S #6	11.0	20	D	14 11-8	5	DS	18"	difficult augering fro. 20.0 to 30.0'
			25	D	1 1-4	6	DS	14"	
			30	D	10 18-30	7	DS	16"	
	Light brown wet very dense fine to medium sand trace gravel		35	D	30 45-51/3"	8	DS	14"	

SAMPLER TYPE: DS = Driven Split Spoon; PS = Pressured Split Tube; CA = Continuous Flight Auger; RC = Rock Core
SAMPLE CONDITIONS: D = Disturbed; I = Intact; U = Undisturbed; L = Lost
GROUND WATER DEPTH: At Completion 9.0 Ft.; After — Hrs. — Ft.; After — Hrs. — Ft.
BORING METHOD: HSA = Hollow Stem Auger; CFA = Continuous Flight Auger; RC = Rotary Core; HA = Hand Auger

STANDARD PENETRATION TEST-DRIVING 2" OD SAMPLER 1' WITH 140# HAMMER FALLING 30"; COUNT MADE AT 6" INTERVALS

440

RECORD OF SOIL EXPLORATION

KIDDE CONSULTANTS, INC.

Project Name: Central Avenue — Boring: B-6
Location: Baltimore City, MD — Job: 3-85-100

Sta. 20+50, 14.75' Lt.

SAMPLER
Datum: — Hammer Wt. 140 Lbs. — Hole Diameter 10" — Foreman P.Stephens
Surf. Elev. — Ft. Hammer Drop 30 In. — Rock Core Dia X — Inspector
Date Started 7-15-85 — Pipe Size 2"OD In. — Boring Method HSA — Date Completed 7-15-85

ELEV.	SOIL DESCRIPTION (Color, Moisture, Density, Plasticity, Soil, Proportions)	STRA. DEPTH	DEPTH SCALE	COND.	Blows/6"	NO.	TYPE	REC.	BORING & SAMPLING NOTES
	SURFACE	0.0							
	(possible fill) Clay, sand, gravel	7.0	5	D	3 3-3	1	DS	4"	
				D	2 4-3	2	DS	6"	
	Brown moist to wet medium dense medium sand and gravel with trace of clay S #4 - dense S #6,7,8 - very dense		10	D	3 7-7	3	DS	8"	water first encountered at 9.5'
			15	D	5 22-17	4	DS	12"	sand and gravel ran up into augers at 30.0' washed out with water
			20	D	6 7-8	5	DS	10"	kept augers filled with water from 10.0' to 40.0'
			25	D	8 27-32	6	DS	12"	bottom of test hole at 40.5'
			30	D	51 25-6"	7	DS	8"	
		38.0	35	D	16 21-35	8	DS	12"	

SAMPLER TYPE: DS = Driven Split Spoon; PS = Pressured Split Tube; CA = Continuous Flight Auger; RC = Rock Core
SAMPLE CONDITIONS: D = Disturbed; I = Intact; U = Undisturbed; L = Lost
GROUND WATER DEPTH: At Completion 7.0 Ft.; After — Hrs. — Ft.; After — Hrs. — Ft.
BORING METHOD: HSA = Hollow Stem Auger; CFA = Continuous Flight Auger; RC = Rotary Core; HA = Hand Auger

STANDARD PENETRATION TEST-DRIVING 2" OD SAMPLER 1' WITH 140# HAMMER FALLING 30"; COUNT MADE AT 6" INTERVALS

440

RECORD OF SOIL EXPLORATION

KIDDE CONSULTANTS, INC.

Project Name: Central Avenue — Boring: B-5
Location: Baltimore City, MD — Job: 3-85-100

Sta. 18+50, 15.0' Rt.

SAMPLER
Datum: — Hammer Wt. 140 Lbs. — Hole Diameter 8" — Foreman C.Walker
Surf. Elev. — Ft. Hammer Drop 30 In. — Rock Core Dia — Inspector
Date Started 7-9-85 — Pipe Size 2"OD In. — Boring Method HSA — Date Completed 7-9-85

ELEV.	SOIL DESCRIPTION (Color, Moisture, Density, Plasticity, Soil, Proportions)	STRA. DEPTH	DEPTH SCALE	COND.	Blows/6"	NO.	TYPE	REC.	BORING & SAMPLING NOTES
	SURFACE	0.0							
	Light brown wet very dense fine to medium sand trace gravel	41.0	40	D	51 23-6"	9	DS	10"	
	bottom of test hole at 41.0'		45						

RECORD OF SOIL EXPLORATION

KIDDE CONSULTANTS, INC.

Project Name: Central Avenue — Boring: B-6
Location: Baltimore City, MD — Job: 3-85-100

Sta. 20+50, 14.75' Lt.

SAMPLER
Datum: — Hammer Wt. 140 Lbs. — Hole Diameter 10" — Foreman P.Stephens
Surf. Elev. — Ft. Hammer Drop 30 In. — Rock Core Dia X — Inspector
Date Started 7-15-85 — Pipe Size 2"OD In. — Boring Method HSA — Date Completed 7-15-85

ELEV.	SOIL DESCRIPTION (Color, Moisture, Density, Plasticity, Soil, Proportions)	STRA. DEPTH	DEPTH SCALE	COND.	Blows/6"	NO.	TYPE	REC.	BORING & SAMPLING NOTES
	SURFACE	0.0							
	Pink brown moist very dense micaceous silty fine to medium sand	40.5	45	D	51/6"	9	DS	6"	bottom of test hole at 40.5'
	bottom of test hole at 40.5'								

FEDERAL REGION	STATE	PROJECT NO.	SHEET NO.
3	MD	IX-3057(2)	18

page 1 of 2

RECORD OF SOIL EXPLORATION

KIDDE CONSULTANTS, INC.

Project Name: Central Avenue — Boring: B-7
Location: Baltimore City, MD — Job: 3-85-100
Sta. 22+50, 13.25' Rt.
Datum: — Hammer Wt. 140 Lbs. — Hole Diameter 8" — Foreman C. Walker
Surf. Elev. — Ft. Hammer Drop 30 in. — Rock Core Dia. X — Inspector
Date Started 7-9-85 — Pipe Size 2"OD in. — Boring Method HSA — Date Completed 7-9-85

ELEV.	SOIL DESCRIPTION (Color, Moisture, Density, Plasticity, Soil, Proportions)	STRA. DEPTH	DEPTH SCALE	SAMPLE Blows/6"	NO.	TYPE	REC.	BORING & SAMPLING NOTES
	SURFACE	0.0						
	Brown moist medium dense fine sand cobbles and brick (fill)	3.5		I 6 5-7	1	DS	14"	1" blacktop 5" cobblestone
	Brown and gray moist very soft silt with sand (possible fill)	8.0	5	D 1 1-1	2	DS	12"	
	Brown moist to wet medium dense to dense medium to coarse sand and gravel		10	D 2 5-6	3	DS	10"	water on rods at 11.0'
			15	D 3 7-7	4	DS	16"	very difficult augering from 15.0 to 35.0'
			20	D 10 12-9	5	DS	14"	
			25	D 7 15-11	6	DS	14"	
			30	D 10 14-23	7	DS	10"	
	Light gray moist hard micaceous silt	31.0	35	D 10 13-8	8	DS	14"	

SAMPLER TYPE: DS = Driven Split Spoon; PT = Pushed Thin Wall Tube; CA = Continuous Flight Auger; RC = Rock Core
SAMPLE CONDITIONS: D = Disturbed; I = Intact; U = Undisturbed; L = Lost
GROUND WATER DEPTH: AT COMPLETION 9.0 Ft.; After ___ Hrs. ___ Ft.; After ___ Hrs. ___ Ft.
BORING METHOD: HSA = Hollow Stem Auger; CFA = Continuous Flight Auger; DC = Driven Casing; HD = Hand Drilling

STANDARD PENETRATION TEST-DRIVING 2" OD SAMPLER 1' WITH 140# HAMMER FALLING 30"; COUNT MADE AT 6" INTERVALS.

MD

RECORD OF SOIL EXPLORATION page 1 of 2

KIDDE CONSULTANTS, INC.

Project Name: Central Avenue — Boring: B-8
Location: Baltimore City, MD — Job: 3-85-100
Sta. 25+10, 16.5' Rt.
Datum: — Hammer Wt. 140 Lbs. — Hole Diameter 8" — Foreman C. Walker
Surf. Elev. — Ft. Hammer Drop 30 in. — Rock Core Dia. X — Inspector
Date Started 7-19-85 — Pipe Size 2"OD in. — Boring Method HSA — Date Completed 7-19-85

ELEV.	SOIL DESCRIPTION (Color, Moisture, Density, Plasticity, Soil, Proportions)	STRA. DEPTH	DEPTH SCALE	SAMPLE Blows/6"	NO.	TYPE	REC.	BORING & SAMPLING NOTES
	SURFACE	0.0						
	Brown moist medium dense medium sand and gravel fill with brick and trace silt	7.0	5	D 4 9-4	1	DS	14"	1" blacktop over stone
			5	D 3 2-19	2	DS	6"	
	Brown wet medium dense fine sand trace gravel	12.0	10	D 3 8-10	3	DS	14"	
	Brown wet medium dense coarse sand and gravel		15	D 5 9-20	4	DS	16"	water on rods at 12.0'
			20	D 8 10-18	5	DS	14"	
			25	D 15 26-16	6	DS	14"	
			30	D 8 13-15	7	DS	14"	
	Brown and tan moist dense to very dense medium to coarse micaceous silt with trace fine sand (decomposed rock)	32.0	35	D 13 18-20	8	DS	16"	

SAMPLER TYPE: DS = Driven Split Spoon; PT = Pushed Thin Wall Tube; CA = Continuous Flight Auger; RC = Rock Core
SAMPLE CONDITIONS: D = Disturbed; I = Intact; U = Undisturbed; L = Lost
GROUND WATER DEPTH: AT COMPLETION CAVE 10'; After ___ Hrs. ___ Ft.; After ___ Hrs. ___ Ft.
BORING METHOD: HSA = Hollow Stem Auger; CFA = Continuous Flight Auger; DC = Driven Casing; HD = Hand Drilling

STANDARD PENETRATION TEST-DRIVING 2" OD SAMPLER 1' WITH 140# HAMMER FALLING 30"; COUNT MADE AT 6" INTERVALS.

MD

page 2 of 2

RECORD OF SOIL EXPLORATION

KIDDE CONSULTANTS, INC.

Project Name: Central Avenue — Boring: B-7
Location: Baltimore City, MD — Job: 3-85-100
Sta. 22+50, 13.25' Rt.
Datum: — Hammer Wt. 140 Lbs. — Hole Diameter 8" — Foreman C. Walker
Surf. Elev. — Ft. Hammer Drop 30 in. — Rock Core Dia. X — Inspector
Date Started 7-8-85 — Pipe Size 2"OD in. — Boring Method HSA — Date Completed 7-9-85

ELEV.	SOIL DESCRIPTION (Color, Moisture, Density, Plasticity, Soil, Proportions)	STRA. DEPTH	DEPTH SCALE	SAMPLE Blows/6"	NO.	TYPE	REC.	BORING & SAMPLING NOTES
	SURFACE	0.0						
	Light gray moist hard micaceous silt	41.5		D 8 18-24	9	DS	14"	1" blacktop 5" cobblestone
	bottom of test hole at 41.5'		45					

RECORD OF SOIL EXPLORATION page 2 of 2

KIDDE CONSULTANTS, INC.

Project Name: Central Avenue — Boring: B-8
Location: Baltimore City, MD — Job: 3-85-100
Sta. 25+10, 16.5' Rt.
Datum: — Hammer Wt. 140 Lbs. — Hole Diameter 8" — Foreman C. Walker
Surf. Elev. — Ft. Hammer Drop 30 in. — Rock Core Dia. X — Inspector
Date Started 7-19-85 — Pipe Size 2"OD in. — Boring Method HSA — Date Completed 7-19-85

ELEV.	SOIL DESCRIPTION (Color, Moisture, Density, Plasticity, Soil, Proportions)	STRA. DEPTH	DEPTH SCALE	SAMPLE Blows/6"	NO.	TYPE	REC.	BORING & SAMPLING NOTES
	SURFACE	0.0						
	Brown and tan moist dense to very dense medium to coarse micaceous silt with trace fine sand	41.5	45	D 15 28-50	9	DS	15"	
	bottom of test hole at 41.5'							

F.A.P. NO STP-3057 (4)N
SHA CONTRACT NO: BC320-001-815
BALTIMORE CITY CONTRACT NO. TR08310

RECORD OF SOIL EXPLORATION

KIDDE CONSULTANTS, INC.

Project Name: Central Avenue — Boring: B-9
Location: Baltimore City, MD — Job: 3-85-100
Sta. 28+00, 17.0' Rt.

SAMPLER: Datum: — Hammer Wt. 140 Lbs. — Hole Diameter 8" — Foreman C.Walker
Surf. Elev.: — Ft. Hammer Drop 30 In. — Rock Core Dia X — Inspector:
Date Started 7-10-85 — Pipe Size 2"OD In. — Boring Method HSA — Date Completed 7-10-85

ELEV.	SOIL DESCRIPTION (Color, Moisture, Density, Plasticity, Soil, Proportions)	STRA DEPTH	DEPTH SCALE	SAMPLE CONS	Blows/6"	NO	TYPE	REC	BORING & SAMPLING NOTES
	SURFACE	0.0							
	Dark brown moist medium dense coarse silty sand and gravel fill with brick, a cobblestone fragment	4.0	5	D	4 6-7	1	DS	14"	1" blacktop 5" cobblestone
	Brown moist medium dense coarse silty sand and gravel (fill)	11.0	10	D	9 17-12	2	DS	14"	
	Gray wet soft organic silt	19.0	15	D	6 7-9	3	DS	14"	sand attempted to run at 30.0'
	Gray wet medium dense medium silty sand and gravel	23.0	20	I	1 1-2	4	DS	18"	
	Gray wet soft clayey silt with mica	28.0	25	D	2 6-8	5	DS	14"	
	Brown wet medium dense to dense medium silty sand and gravel	30.0	30	I	2 1-3	6	DS	16"	
	Brown wet very dense coarse silty sand & decomposed rock		35	D	3 5-6	7	DS	14"	
					20 22-27	8	DS		

SAMPLER TYPE: D = Driven split spoon; T = Thinwall shelby tube; CA = Continuous flight auger; RC = Rock core
SAMPLE CONDITIONS: D = Disturbed; I = Intact; U = Undisturbed; L = Lost
GROUND WATER DEPTH: At completion 8.0 Ft.; After ___ Hrs. ___ Ft.; After ___ Days ___ Ft.
BORING METHOD: HSA = Hollow stem auger; CFA = Continuous flight auger; RC = Rotary core; MD = Mud drilling

STANDARD PENETRATION TEST: DRIVING 2" OD SAMPLER 1' WITH 140# HAMMER FALLING 30"; COUNT MADE AT 6" INTERVALS

AJO

RECORD OF SOIL EXPLORATION

KIDDE CONSULTANTS, INC.

Project Name: Central Avenue — Boring: B-10
Location: Baltimore City, MD — Job: 3-85-100
Sta. 29+50, 14.0' Lt.

SAMPLER: Datum: — Hammer Wt. 140 Lbs. — Hole Diameter 10" — Foreman F.Stephens
Surf. Elev.: — Ft. Hammer Drop 30 In. — Rock Core Dia X — Inspector:
Date Started 7-15-85 — Pipe Size 2"OD In. — Boring Method HSA — Date Completed 7-15-85

ELEV.	SOIL DESCRIPTION (Color, Moisture, Density, Plasticity, Soil, Proportions)	STRA DEPTH	DEPTH SCALE	SAMPLE CONS	Blows/6"	NO	TYPE	REC	BORING & SAMPLING NOTES
	SURFACE	0.0							
	(possible fill) Asphalt, sand, gravel wood	7.0		D	4 9-9	1	DS	2"	
	Brown dry medium dense clayey sand and gravel (possible fill) & 12 - very loose	7.0	5	T	1 1-2	2	DS	no rec	took auger sample for S-2
	Brown and gray dry to moist loose silty very fine sand with some mica	12.5	10	D	1 2-3	3	DS	18"	
	Dark gray moist very soft organic silt	20.0	15	T	1 1-2	4	DS	18"	
	Gray moist loose silty fine to medium sand with some mica	24.0	20	D	1 3-3	5	DS	18"	water first encountered at 25.0'
	Dark brown and gray moist medium stiff fine sandy silty clay with some mica (organic)	30.0	25	T	1 3-4	6	DS	18"	sand and gravel ran up in augers at 30' washed augers out with water and kept augers filled from 30 to 40'
	Red and brown, wet very dense medium to coarse sand and gravel	32.5	30	D	11 51 21-4"	7	DS	12"	bottom of test hole at 41.0'
	Brown tan gray moist very hard silt		35	T	10 26-43	8	DS	14"	

SAMPLER TYPE: D = Driven split spoon; T = Thinwall shelby tube; CA = Continuous flight auger; RC = Rock core
SAMPLE CONDITIONS: D = Disturbed; I = Intact; U = Undisturbed; L = Lost
GROUND WATER DEPTH: At completion ___ Ft.; After ___ Hrs. ___ Ft.; After ___ Days ___ Ft.
BORING METHOD: HSA = Hollow stem auger; CFA = Continuous flight auger; RC = Rotary core; MD = Mud drilling

STANDARD PENETRATION TEST: DRIVING 2" OD SAMPLER 1' WITH 140# HAMMER FALLING 30"; COUNT MADE AT 6" INTERVALS

AJO

RECORD OF SOIL EXPLORATION

KIDDE CONSULTANTS, INC.

Project Name: Central Avenue — Boring: B-9
Location: Baltimore City, MD — Job: 3-85-100
Sta. 28+00, 17.0' Rt.

SAMPLER: Datum: — Hammer Wt. 140 Lbs. — Hole Diameter 8" — Foreman C.Walker
Surf. Elev.: — Ft. Hammer Drop 30 In. — Rock Core Dia X — Inspector:
Date Started 7-10-85 — Pipe Size 2"OD In. — Boring Method HSA — Date Completed 7-10-85

ELEV.	SOIL DESCRIPTION (Color, Moisture, Density, Plasticity, Soil, Proportions)	STRA DEPTH	DEPTH SCALE	SAMPLE CONS	Blows/6"	NO	TYPE	REC	BORING & SAMPLING NOTES
	SURFACE	0.0							
	Brown wet very dense coarse silty sand and decomposed rock	41.4	45		30 36-51 4"		DS		
	bottom of test hole at 41.4'								

RECORD OF SOIL EXPLORATION

KIDDE CONSULTANTS, INC.

Project Name: Central Avenue — Boring: B-10
Location: Baltimore City, MD — Job: 3-85-100
Sta. 29+50, 14.0' Lt.

SAMPLER: Datum: — Hammer Wt. 140 Lbs. — Hole Diameter 10" — Foreman F.Stephens
Surf. Elev.: — Ft. Hammer Drop 30 In. — Rock Core Dia X — Inspector:
Date Started 7-15-85 — Pipe Size 2"OD In. — Boring Method HSA — Date Completed 7-15-85

ELEV.	SOIL DESCRIPTION (Color, Moisture, Density, Plasticity, Soil, Proportions)	STRA DEPTH	DEPTH SCALE	SAMPLE CONS	Blows/6"	NO	TYPE	REC	BORING & SAMPLING NOTES
	SURFACE	0.0							
	Brown tan moist very hard silt	41.0	45	T	51 18-6"	9	DS	12"	
	bottom of test hole at 41.0'								

F.A.P. NO STP-3057 (4)N
SHA CONTRACT NO: BC320-001-815
BALTIMORE CITY CONTRACT NO. TR08310

FEDERAL REGION	STATE	FED. AID PROJ. NO.	SHEET NO.
3	MD.	IX 3057 (2)	15

page 1 of 2

RECORD OF SOIL EXPLORATION

KIDDE CONSULTANTS, INC.

Project Name: Central Avenue — Boring: B-11
Location: Baltimore City, MD — Job: 3-85-100
Sta. 31+25, 17.0' Rt.
SAMPLER — Hammer Wt. 140 Lbs. — Hole Diameter 8" — Foreman C.Walker
Datum — Hammer Drop 30 In. — Rock Core Dia X — Inspector
Surf. Elev. — Ft. — Pipe Size 2"OD In. — Boring Method HSA — Date Completed 7-15-85
Date Started 7-15-85

ELEV.	SOIL DESCRIPTION	STRA. DEPTH	DEPTH SCALE	SAMPLE COND.	Blows/6"	NO.	TYPE	REC.	BORING & SAMPLING NOTES
	SURFACE	0.0							
	Dark brown moist medium dense sand and brick fill with wood and cinders	4.0		D	4 5-6	1	DS	14"	2" blacktop 4"cobblestone
	Brown moist loose to medium dense to very dense coarse sand with some silt and gravel	13.0	10	D	1 2-4	2	DS	14"	
				D	18 28-30	3	DS	14"	
	Red brown and gray moist very stiff silt with fine sand	22.5	15	D	5 8-15	4	DS	16"	
			20	I	3 4-5	5	DS	18"	
	Multi-colored hard silt with trace clay trace sand lenses	28.0	25	E	11 13-30	6	DS	16"	
	Brown wet very dense medium to coarse sand and gravel	38.0	30	G	23 48-48	7	DS	14"	
			35	D	20 30-48	8	DS	14"	
	Tan and brown wet hard silty clay								

SAMPLER TYPE — SAMPLE CONDITIONS — GROUND WATER DEPTH: AT COMPLETION 12.0 Ft. — BORING METHOD

STANDARD PENETRATION TEST-DRIVING 2" OD SAMPLER 1' WITH 140# HAMMER FALLING 30"; COUNT MADE AT 6" INTERVALS

page 1 of 2

RECORD OF SOIL EXPLORATION

KIDDE CONSULTANTS, INC.

Project Name: Central Avenue — Boring: B-12
Location: Baltimore City, MD — Job: 3-85-100
Sta. 33+50, 16.5' Lt.
SAMPLER — Hammer Wt. 140 Lbs. — Hole Diameter 8" — Foreman C.Walker
Datum — Hammer Drop 30 In. — Rock Core Dia — Inspector
Surf. Elev. — Ft. — Pipe Size 2"OD In. — Boring Method HSA — Date Completed 7-16-85
Date Started 7-16-85

ELEV.	SOIL DESCRIPTION	STRA. DEPTH	DEPTH SCALE	SAMPLE COND.	Blows/6"	NO.	TYPE	REC.	BORING & SAMPLING NOTES
	SURFACE	0.0							
	Dark brown moist medium dense coarse sand and gravel fill with broken cobbles stone & brick	4.0	5	D	12 10-8	1	DS	15"	5" cobblestone
	Brown soft moist silty clay (possible fill)	9.0		I	3 2-2	2	DS	14"	
	Brown wet loose to medium dense medium sand and and gravel	13.0	10	D	2 2-10	3	DS	14"	
	Brown moist to wet medium dense medium sand trace medium gravel	23.0	15	D	2 4-7	4	DS	16"	
			20	D	3 5-8	5	DS	16"	
	Red and tan wet medium stiff soft clay	28.0	25	I	2 3-4	6	DS	14"	
	Tan, wet very stiff clay trace fine sand	34.0	30	I	3 6-15	7	DS	16"	
	Brown wet very dense medium to coarse sand with trace silt and gravel		35	D	8 16-30	8	DS	16"	

SAMPLER TYPE — SAMPLE CONDITIONS — GROUND WATER DEPTH: AT COMPLETION 12.0 Ft. — BORING METHOD

STANDARD PENETRATION TEST-DRIVING 2" OD SAMPLER 1' WITH 140# HAMMER FALLING 30"; COUNT MADE AT 6" INTERVALS

page 2 of 2

RECORD OF SOIL EXPLORATION

KIDDE CONSULTANTS, INC.

Project Name: Central Avenue — Boring: B-11
Location: Baltimore City, MD — Job: 3-85-100
Sta. 31+25, 17.0' Rt.
SAMPLER — Hammer Wt. 140 Lbs. — Hole Diameter 8" — Foreman C.Walker
Datum — Hammer Drop 30 In. — Rock Core Dia X — Inspector
Surf. Elev. — Ft. — Pipe Size 2"OD In. — Boring Method HSA — Date Completed 7-15-85
Date Started 7-15-85

ELEV.	SOIL DESCRIPTION	STRA. DEPTH	DEPTH SCALE	SAMPLE COND.	Blows/6"	NO.	TYPE	REC.	BORING & SAMPLING NOTES
	SURFACE	0.0							
	Tan and brown wet hard silty clay	41.5		D	8 15-21	9	DS	16"	
	bottom of test hole at 41.5'		45						

page 2 of 2

RECORD OF SOIL EXPLORATION

KIDDE CONSULTANTS, INC.

Project Name: Central Avenue — Boring: B-12
Location: Baltimore City, MD — Job: 3-85-100
Sta. 33+50, 16.5' Lt.
SAMPLER — Hammer Wt. 140 Lbs. — Hole Diameter 8" — Foreman C.Walker
Datum — Hammer Drop 30 In. — Rock Core Dia — Inspector
Surf. Elev. — Ft. — Pipe Size 2"OD In. — Boring Method HSA — Date Completed 7-16-85
Date Started 7-16-85

ELEV.	SOIL DESCRIPTION	STRA. DEPTH	DEPTH SCALE	SAMPLE COND.	Blows/6"	NO.	TYPE	REC.	BORING & SAMPLING NOTES
	SURFACE	0.0							
	Brown wet very dense medium to coarse sand with trace silt and gravel	41.5		D	12 20-36	9	DS	14"	
	bottom of test hole at 41.5'		45						

F.A.P. NO STP-3057 (4)N
SHA CONTRACT NO: BC320-001-815
BALTIMORE CITY CONTRACT NO. TR08310

RECORD OF SOIL EXPLORATION

KIDDE CONSULTANTS, INC.

Project Name: Central Avenue — Boring: B-13
Location: Baltimore City, MD — Job: 3-85-100
Sta. 36+50, 13.75' Rt. — Sampler: 140 Lbs. — Hole Diameter: 8" — Foreman: C.Walker
Datum: — Hammer Wt. 140 Lbs. — Rock Core Dia: X — Inspector:
Surf. Elev. 7-16-85 Ft. — Hammer Drop 30 In. — Boring Method: HSA — Date Completed: 7-16-85
Date Started: Pipe Size 2"OD In.

Elev.	Soil Description	Strat. Depth	Depth Scale	Cond.	Blows/6"	No.	Type	Rec.	Boring & Sampling Notes
	SURFACE	0.0							
	Dark brown moist loose medium sandy silt with brick (fill)	8.0		D	2 3-5	1	DS	14"	
	Brown and gray moist medium stiff silty clay (fill)	7.0	5	T	3 2-3	2	DS	16"	
	Brown and moist loose medium silty sand with brick, trace gravel with decomposed rock (fill)	13.0	10	D	3 2-2	3	DS	14"	
	Brown moist to wet very dense coarse sand and gravel	18.0	15	D	5 10-30	4	DS	16"	
	Tan wet very dense fine sand with trace silt	23.0	20	D	12 31-51	5	DS	16"	
	Tan and light brown moist hard clay trace gravel in S-7	33.0	25	T	51/6"	6	DS	6"	
			30	D	51 15-4"	7	DS	10"	
	Brown wet very dense medium to coarse sand and gravel		35	D	25 38-35	8	DS	16"	

Sampler Type: — Sample Conditions: — Ground Water Depth: 11.8 Ft. — Boring Method:

STANDARD PENETRATION TEST-DRIVING 2" OD SAMPLER 1' WITH 140# HAMMER FALLING 30"; COUNT MADE AT 6" INTERVALS

page 2 of 2

RECORD OF SOIL EXPLORATION

KIDDE CONSULTANTS, INC.

Project Name: Central Avenue — Boring: B-13
Location: Baltimore City, MD — Job: 3-85-100
Sta. 36+50, 13.75' Rt. — Sampler: 140 Lbs. — Hole Diameter: 8" — Foreman: C.Walker
Datum: — Hammer Wt. 140 Lbs. — Rock Core Dia: X — Inspector:
Surf. Elev. Ft. — Hammer Drop 30 In. — Boring Method: HSA — Date Completed: 7-16-85
Date Started: 7-16-85 — Pipe Size 2"OD In.

Elev.	Soil Description	Strat. Depth	Depth Scale	Cond.	Blows/6"	No.	Type	Rec.	Boring & Sampling Notes
	SURFACE	0.0							
	Brown wet very dense medium to coarse sand and gravel	41.5		D	9 18-33	9	DS	16"	
	bottom of test hole at 41.5'		45						

RECORD OF SOIL EXPLORATION

KIDDE CONSULTANTS, INC.

Project Name: Central Avenue — Boring: B-14
Location: Baltimore City, MD — Job: 3-85-100
Sta. 39+50, 12.0' Lt. — Sampler: 140 — Hole Diameter: 8" — Foreman: C.Walker
Datum: — Hammer Wt. 140 Lbs. — Rock Core Dia: X — Inspector:
Surf. Elev. Ft. — Hammer Drop 30 In. — Boring Method: HSA — Date Completed: 7-17-85
Date Started: 7-17-85 — Pipe Size 2"OD In.

Elev.	Soil Description	Strat. Depth	Depth Scale	Cond.	Blows/6"	No.	Type	Rec.	Boring & Sampling Notes
	SURFACE	0.0							
	Brown moist medium stiff silt with brick (fill)	3.0		I	6 8-6	1	DS	16"	6" cobblestone
	Brown and gray moist clayey silt (possible fill)	9.0	5	I	2 2-2	2	DS	18"	
	Dark brown moist loose medium silty clayey sand	13.0	10	D	2 3-4	3	DS	18"	
	Brown moist to wet medium dense sand and gravel		15	D	2 6-13	4	DS	12"	
			20	D	7 20-23	5	DS	14"	
			25	D	5 10-18	6	DS	14"	water on rods at 15.0'
		33.0	30	D	3 10-14	7	DS	14"	
	Brown and gray moist hard silt trace fine sand trace clay in samples 8 and 9		35	I	11 27-85	8	DS	16"	

Sampler Type: — Sample Conditions: — Ground Water Depth: Dry 15' — Boring Method:

STANDARD PENETRATION TEST-DRIVING 2" OD SAMPLER 1' WITH 140# HAMMER FALLING 30"; COUNT MADE AT 6" INTERVALS

page 2 of 2

RECORD OF SOIL EXPLORATION

KIDDE CONSULTANTS, INC.

Project Name: Central Avenue — Boring: B-14
Location: Baltimore City, MD — Job: 3-85-100
Sta. 39+50, 12.0' Lt. — Sampler: 140 Lbs. — Hole Diameter: 8" — Foreman: C.Walker
Datum: — Hammer Wt. 140 Lbs. — Rock Core Dia: X — Inspector:
Surf. Elev. Ft. — Hammer Drop 30 In. — Boring Method: HSA — Date Completed: 7-17-85
Date Started: 7-17-85 — Pipe Size 2"OD In.

Elev.	Soil Description	Strat. Depth	Depth Scale	Cond.	Blows/6"	No.	Type	Rec.	Boring & Sampling Notes
	SURFACE	0.0							
	Brown and gray moist hard silt trace fine sand trace clay in samples 8 & 9	41.5		I	12 25-33	9	DS	16"	
	bottom of test hole at 41.5'		45						

F.A.P. NO STP-3057 (4)N
SHA CONTRACT NO: BC320-001-815
BALTIMORE CITY CONTRACT NO. TR08310

RECORD OF SOIL EXPLORATION

KIDDE CONSULTANTS, INC.

Project Name: Central Avenue — Boring: B-15
Location: Baltimore City, MD — Job: 3-85-100

Sta. 41+85, 12.0' Lt. — SAMPLER

Datum: — Hammer Wt. 140 Lbs. — Hole Diameter 8" — Foreman C.Walker
Surf. Elev. — Ft. — Hammer Drop 30 In. — Rock Core Dia x — Inspector
Date Started 7-18-85 — Pipe Size 3A00 In. — Boring Method HSA — Date Completed 7-18-85

ELEV.	SOIL DESCRIPTION (Color, Moisture, Density, Plasticity, Soil Properties)	STRATA DEPTH	DEPTH SCALE	SAMPLE COND	Blows/6"	NO.	TYPE	REC	BORING & SAMPLING NOTES
	SURFACE	0.0							1.0' concrete
	Railroad ties (wood)	2.0		D	eoq.	1	DS	3ar	
	Brown moist soft silty clay trace sand (fill)	7.0	5	I	2 2-3	2	DS	18"	
	Brown moist to wet medium dense medium to coarse sand and gravel		10	D	19 13-14	3	DS	14"	
			15	D	18 15-14	4	DS	16"	water on rods at 15.0'
			20	D	9 20-20	5	DS	14"	
			25	D	6 11-12	6	DS	14"	
	Brown and gray moist stiff to very stiff silty clay	30.5	30	I	17 8-5	7	DS	16"	
			35	I	3 5-8	8	DS	16"	

SAMPLER TYPE — SAMPLE CONDITIONS — GROUND WATER DEPTH: at completion 15.0 Ft. — BORING METHOD

STANDARD PENETRATION TEST-DRIVING 2" OD SAMPLER 1' WITH 140# HAMMER FALLING 30"; COUNT MADE AT 6" INTERVALS

RECORD OF SOIL EXPLORATION — page 1 of 2

KIDDE CONSULTANTS, INC.

Project Name: Central Avenue — Boring: B-16
Location: Baltimore City, MD — Job: 3-85-100

Sta. 42+50, 14.0' Rt. — SAMPLER

Datum: — Hammer Wt. — Lbs. — Hole Diameter — Foreman
Surf. Elev. — Ft. — Hammer Drop — In. — Rock Core Dia — Inspector
Date Started — Pipe Size — In. — Boring Method — Date Completed

ELEV.	SOIL DESCRIPTION (Color, Moisture, Density, Plasticity, Soil Properties)	STRATA DEPTH	DEPTH SCALE	SAMPLE COND	Blows/6"	NO.	TYPE	REC	BORING & SAMPLING NOTES
	SURFACE	0.0							5" cobblestone
	Brown moist soft silty sand and with brick (fill)	4.0		D	3 2-2	1	DS	16"	7" concrete
	Brown moist medium stiff clay (possible fill)	8.0	5	I	2 1-4	2	DS	16"	
	Brown moist to wet medium dense to dense coarse sand and gravel with trace silt		10	I	10 15-21	3	DS	14"	
			15	D	10 5-7	4	DS	16"	water on rods at 15.0'
			20	D	10 15-20	5	DS	14"	
			25	D	14 16-18	6	DS	15	
	Brown and gray moist very stiff to hard medium silt (decomposed rock)	28.0	30	D	8 8-15	7	DS	16"	
			35	I	14 15-27	8	DS	16"	

SAMPLER TYPE — SAMPLE CONDITIONS — GROUND WATER DEPTH: at completion 13.0 Ft. — BORING METHOD

STANDARD PENETRATION TEST-DRIVING 2" OD SAMPLER 1' WITH 140# HAMMER FALLING 30"; COUNT MADE AT 6" INTERVALS

RECORD OF SOIL EXPLORATION — page 2 of 2

KIDDE CONSULTANTS, INC.

Project Name: Central Avenue — Boring: B-15
Location: Baltimore City, MD — Job: 3-85-100

Sta. 41+85, 12.0' Lt. — SAMPLER

Datum: — Hammer Wt. 140 Lbs. — Hole Diameter 8" — Foreman C.Walker
Surf. Elev. — Ft. — Hammer Drop 30 In. — Rock Core Dia x — Inspector
Date Started 7-18-85 — Pipe Size 3A00 In. — Boring Method HSA — Date Completed 7-18-85

ELEV.	SOIL DESCRIPTION (Color, Moisture, Density, Plasticity, Soil Properties)	STRATA DEPTH	DEPTH SCALE	SAMPLE COND	Blows/6"	NO.	TYPE	REC	BORING & SAMPLING NOTES
	SURFACE	44.5							
	Brown and gray moist stiff to very stiff silty clay	41.5		I	5 8-10	9	DS	16"	
			45						
	bottom of test holeat 41.5'								

RECORD OF SOIL EXPLORATION — page 2 of 2

KIDDE CONSULTANTS, INC.

Project Name: Central Avenue — Boring: B-16
Location: Baltimore City, MD — Job: 3-85-100

Sta. 42+50, 14.0' Rt. — SAMPLER

Datum: — Hammer Wt. 140 Lbs. — Hole Diameter 8" — Foreman
Surf. Elev. — Ft. — Hammer Drop 30 In. — Rock Core Dia — Inspector
Date Started 7-19-85 — Pipe Size 3A00 In. — Boring Method HSA — Date Completed 7-19-85

ELEV.	SOIL DESCRIPTION (Color, Moisture, Density, Plasticity, Soil Properties)	STRATA DEPTH	DEPTH SCALE	SAMPLE COND	Blows/6"	NO.	TYPE	REC	BORING & SAMPLING NOTES
	SURFACE	44.5							
	Brown and gray moist very stiff to hard medium silt	41.5		I	14 28-51	9	DS	18"	
			45						
	bottom of test hole at 41.5'								

F.A.P. NO STP-3057 (4)N
SHA CONTRACT NO: BC320-001-815
BALTIMORE CITY CONTRACT NO. TR08310

'ISIONS	CONSULTANT	CITY OF BALTIMORE DEPARTMENT OF PUBLIC WORKS &	STATE HIGHWAY ADMINISTRATION OF MARYLAND INTERSTATE DIVISION FOR BALTIMORE CITY
	Purdum & Jeschke	RECONSTRUCTION OF CENTRAL AVENUE HAZFORD RUN STORM	DRAWN BY / DES. BY

RECORD OF SOIL EXPLORATION

KIDDE CONSULTANTS, INC.

Project Name: Central Avenue — Boring: B-17
Location: Baltimore City, MD — Job: 3-85-100
Sta. 45+50, 16.25' Lt.

SAMPLER
Datum: [illegible] — Hammer Wt. 140 Lbs. — Hole Diameter 8" — Foreman: C.Walker
Surf. Elev. [illegible] Ft. — Hammer Drop 30 In. — Rock Core Dia. X — Inspector:
Date Started 7-17-85 — Pipe Size 3"OD In. — Boring Method HSA — Date Completed 7-17-85

ELEV.	SOIL DESCRIPTION (Color, Moisture, Density, Plasticity, Soil, Proportions)	STRA DEPTH	DEPTH SCALE	SAMPLE COND	Blows/6"	NO.	TYPE	REC	BORING & SAMPLING NOTES
	SURFACE	0.0							2" blacktop over 4" stone
	Wood railroad ties	2.0			sug.	1	CA		
	Brown moist medium dense medium silty sand with coarse gravel	8.0	5	D	8 9-10	2	DS	10"	
	Brown wet medium dense sand	12.0	10	D	8 13-14	3	DS	13"	
	Brown moist medium dense medium to coarse sand	17.0	15	D	6 7-9	4	DS	14"	
	Brown wet dense coarse sand and gravel	24.0	20	D	12 15-25	5	DS	14"	
	Light brown, tan and maroon hard silt with mica and clay		25	I	12 18-23	6	DS	18"	water on rods at 15.0'
			30	I	6 7-10	7	DS	16"	
			35	I	7 15-33	8	DS	16"	

SAMPLER TYPE: [illegible]
SAMPLE CONDITIONS: [illegible]
GROUND WATER DEPTH: AT COMPLETION cave 22' FT; AFTER ___ HRS ___ FT; AFTER ___ HRS ___ FT
BORING METHOD: [illegible]

STANDARD PENETRATION TEST-DRIVING 2" OD SAMPLER 1' WITH 140# HAMMER FALLING 30" COUNT MADE AT 6" INTERVALS

RECORD OF SOIL EXPLORATION

KIDDE CONSULTANTS, INC.

Project Name: Central Avenue — Boring: B-17
Location: Baltimore City, MD — Job: 3-85-100
Sta. 45+50, 16.25' Lt.

SAMPLER
Datum: [illegible] — Hammer Wt. 140 Lbs. — Hole Diameter 8" — Foreman: C.Walker
Surf. Elev. [illegible] Ft. — Hammer Drop 30 In. — Rock Core Dia. X — Inspector:
Date Started 7-11-85 — Pipe Size 3"OD In. — Boring Method HSA — Date Completed 7-11-85

ELEV.	SOIL DESCRIPTION (Color, Moisture, Density, Plasticity, Soil, Proportions)	STRA DEPTH	DEPTH SCALE	SAMPLE COND	Blows/6"	NO.	TYPE	REC	BORING & SAMPLING NOTES
	SURFACE	0.0							
	Light brown, tan and maroon silt with mica and clay	41.5		I	8 18-48	9	DS	16"	
	Bottom of test hole at 41.5'		45						

F.A.P. NO STP-3057 (4)N
SHA CONTRACT NO: BC320-001-815
BALTIMORE CITY CONTRACT NO. TR08310

RECORD OF SOIL EXPLORATION

KIDDE CONSULTANTS, INC.

Project Name: Central Ave. - Culvert Cores — Boring: C-1
Location: Baltimore, MD — Job:
Sta. 12+60, 11.0' Lt.
Datum: — Hammer Wt. ___ Lbs. — Hole Diameter: 7" — Foreman: Holman
Surf. Elev. ___ Ft. — Hammer Drop ___ In. — Rock Core Dia: 2" — Inspector: Carnes
Date Started: 8/9/85 — Pipe Size ___ In. — Boring Method: H.C — Date Completed: 8/9/85

ELEV.	SOIL DESCRIPTION	STRA. DEPTH	DEPTH SCALE	SAMPLE COND.	BLOWS/6"	NO.	TYPE	REC.	BORING & SAMPLING NOTES
	SURFACE	0.0							4" Belgum Block
	Dark grey fine to coarse sand with gravel, brick wood (fill)	3.0							
	Grey, metamorphic rock with mortar joints - fractured -					1	RC	46"	
		11.0				2	RC	24"	Creosote odor in wood
	Dark grey sandy silt with wood	15.5							
	Bottom test hole @ 15.5'								

SAMPLER TYPE — SAMPLE CONDITIONS — GROUND WATER DEPTH — BORING METHOD

STANDARD PENETRATION TEST-DRIVING 2" OD SAMPLER 1' WITH 140# HAMMER FALLING 30"; COUNT MADE AT 6" INTERVALS

RECORD OF SOIL EXPLORATION

KIDDE CONSULTANTS, INC.

Project Name: Central Ave. - Culvert Cores — Boring: C-2
Location: Baltimore, MD — Job:
Sta. 20+50, 10.0' Lt.
Datum: — Hammer Wt. ___ Lbs. — Hole Diameter: 7" — Foreman: Holman
Surf. Elev. ___ Ft. — Hammer Drop ___ In. — Rock Core Dia: 2" — Inspector: Carnes
Date Started: 8/8/85 — Pipe Size ___ In. — Boring Method: H.C — Date Completed: 8/8/85

ELEV.	SOIL DESCRIPTION	STRA. DEPTH	DEPTH SCALE	SAMPLE COND.	BLOWS/6"	NO.	TYPE	REC.	BORING & SAMPLING NOTES
	SURFACE	0.0							4" Belgum Block
	Dark grey to brown sand and gravel with silt, brick and wood (fill)	3.5							
	Grey, metamorphic rock with mortar joints - fractured -					1	RC	65"	
		11.5				2	RC	41	
	Dark grey soft sandy silt	15.5							

SAMPLER TYPE — SAMPLE CONDITIONS — GROUND WATER DEPTH — BORING METHOD

STANDARD PENETRATION TEST-DRIVING 2" OD SAMPLER 1' WITH 140# HAMMER FALLING 30"; COUNT MADE AT 6" INTERVALS

RECORD OF SOIL EXPLORATION

KIDDE CONSULTANTS, INC.

Project Name: Central Ave. - Culvert Cores — Boring: C-3
Location: Baltimore, MD — Job:
Sta. 33+50, 12.5' Lt.
Datum: — Hammer Wt. ___ Lbs. — Hole Diameter: 7" — Foreman: Holman
Surf. Elev. ___ Ft. — Hammer Drop ___ In. — Rock Core Dia: 2" — Inspector: Carnes
Date Started: 8/7/85 — Pipe Size ___ In. — Boring Method: DC — Date Completed: 8/7/85

ELEV.	SOIL DESCRIPTION	STRA. DEPTH	DEPTH SCALE	SAMPLE COND.	BLOWS/6"	NO.	TYPE	REC.	BORING & SAMPLING NOTES
	SURFACE	0.0							4" Belgum Block
	Dark grey to dark brown fine to coarse sand and gravel with trace clay, wood, cobbles (fill)	2.5							
	Grey metamorphic rock w/ mortar joints	5.5				1	RC	59"	
	Brick with mortar joints and concrete					2		31"	
		10.5							
	Concrete	11.5							
	Dark grey organic silty sand (loose)	14.0							
	Bottom test hole @ 14.0'								

RECORD OF SOIL EXPLORATION

KIDDE CONSULTANTS, INC.

Project Name: Central Ave. - Culvert Cores — Boring: C-4
Location: Baltimore, MD — Job:
Sta. 42+50, 10.5' Rt.
Datum: — Hammer Wt. ___ Lbs. — Hole Diameter: 7" — Foreman: Holman
Surf. Elev. ___ Ft. — Hammer Drop ___ In. — Rock Core Dia: 2" — Inspector: Carnes
Date Started: 8/7/85 — Pipe Size ___ In. — Boring Method: DC — Date Completed: 8/7/85

ELEV.	SOIL DESCRIPTION	STRA. DEPTH	DEPTH SCALE	SAMPLE COND.	BLOWS/6"	NO.	TYPE	REC.	BORING & SAMPLING NOTES
	SURFACE	0.0							4" Belgum Block
	Brown to black, moist, silty sand (fill)	6.0							
	Grey metamorphic rock with quartz fragments					1		31"	
		14.0							
	Void	16.0							

F.A.P. NO STP-3057 (4)N
SHA CONTRACT NO: BC320-001-815
BALTIMORE CITY CONTRACT NO. TR08310

RUMMEL · KLEPPER & KAHL

BORING LOG

Project: Central Avenue Storm Drain — Commission No.: 197-42

Location: 23+55 5.0' LT — Date: 11/09/98 to 11/10/98

BORING NO. RKK-104
Page 1 of 2
Boring Method HSA
Ground Surface El. 16.1 ft

BORING METHOD
HSA - Hollow Stem Augers
SSA - Solid Stem Augers
DC - Driving Casing
MD - Mud Drilling

SAMPLER TYPE
DS - Driven Split Barrel Sampler
PT - Pressed Shelby Tube
D- Denison
RC - Rock Core Barrel

GROUND WATER DEPTH
At Completion * ft
Caved Depth ____ ft
After ____ Hrs. ____ ft
Caved Depth ____ ft

STRATA DEPTH ft	SAMPLE DEPTH	SAMPLE NO.	BLOWS/6"		TYPE/SIZE	REC/ATT	P.I.D.	DESCRIPTION (COLOR, DENSITY, MOISTURE, PROPORTION, ETC.)
0.0	0.0							AIR
9.0								EL. 7.1
9.2	9.2	2	WOH	1	DS	24/24		2" Concrete EL. 6.9
			1	1				
	11.2	3	2	3	DS	24/24		Organic Clayey Silt, Trace Mica, Moist, Dark Gray
			3	3				
	13.2	4	WOH	WOH	DS	24/24		Organic Odor
			2	3				
18.5	17.5	5		2	DS	24/24		EL. -2.4
			4	7				
			6					Medium Sand, Trace Silt, Wet, Medium Gray
	20.0	6	2	8	DS	18/18		Running Sand @ 20.0' - 22.5'
			10					
23.5	22.5	7		2	DS	18/18		EL. -7.4
			1	3				EL. -8.9
25.0								Clayey Silt, Moist, Medium - Dark Brown
	25.0	8	1	2	DS	18/18		Clayey Silty Fine Sand, Wet, Dark Brown
27.5			10					EL. -11.4
	27.5	9		4	DS	16/18		
			6	6				Sand and Gravel, Trace Silt, Wet, Medium Brown and Tan EL. -13.9
30.0								
	30.0	10	14	10	DS	18/18		Coarse Sand, Trace - Little Silt, Trace - Small Gravel, Wet, Medium Brown
			14					
33.0	32.5	11		4	DS	16/18		EL. -16.9
			3	10				Sandy Silt, Little Mica, Moist, Tan, White, Medium Brown (Residual Soil)

Standard Penetration Test - Driving 2" O.D. Sampler with 140 LB Hammer freely falling 30".

F.A.P. NO STP-3057 (4)N
SHA CONTRACT NO: BC320-001-815
BALTIMORE CITY CONTRACT NO. TR08310

RUMMEL · KLEPPER & KAHL

BORING LOG

Project: Central Avenue Storm Drain — Commission No.: 197-42

Location: 23+55 5.0' LT — Date: 11/09/98 to 11/10/98

BORING NO. RKK-104
Page 2 of 2
Boring Method HSA
Ground Surface El. 16.1ft

BORING METHOD
HSA - Hollow Stem Augers
SSA - Solid Stem Augers
DC - Driving Casing
MD - Mud Drilling

SAMPLER TYPE
DS - Driven Split Barrel Sampler
PT - Pressed Shelby Tube
D- Denison
RC - Rock Core Barrel

GROUND WATER DEPTH
At Completion * ft
Caved Depth ____ ft
After ____ Hrs. ____ ft
Caved Depth ____ ft

STRATA DEPTH ft	SAMPLE DEPTH	SAMPLE NO.	BLOWS/6"		TYPE/SIZE	REC/ATT	P.I.D.	DESCRIPTION (COLOR, DENSITY, MOISTURE, PROPORTION, ETC.)
	35.0	12	21	13	DS	18/18		Sandy Silt, Damp, Dark Greenish Gray and Tan (Residual Soil)
			13					
	40.0	13	14	20	DS	18/18		
			33					
46.3	45.0	14	14	36	DS	12/18		EL. -30.2
			50/3					Bottom of Boring @ 46.3' *Boring Drilled thru Storm Drain Invert Water and Caved Measurements Not Possible

Standard Penetration Test - Driving 2" O.D. Sampler with 140 LB Hammer freely falling 30".

F.A.P. NO STP-3057 (4)N
SHA CONTRACT NO: BC320-001-815
BALTIMORE CITY CONTRACT NO. TR08310

RUMMEL · KLEPPER & KAHL

BORING LOG

Project: Central Avenue Storm Drain Commission No.: 197-42

Location: 23+55 16.0' LT Date: 11/09/98 to 11/10/98

BORING NO. RKK-204
Page 1 of 1
Boring Method HSA
Ground Surface El. 16.1ft

BORING METHOD
HSA - Hollow Stem Augers
SSA - Solid Stem Augers
DC - Driving Casing
MD - Mud Drilling

SAMPLER TYPE
DS - Driven Split Barrel Sampler
PT - Pressed Shelby Tube
D- Denison
RC - Rock Core Barrel

GROUND WATER DEPTH
At Completion Dry ft
Caved Depth ____ ft
After ____ Hrs. ____ ft
Caved Depth ____ ft

STRATA DEPTH ft	SAMPLE DEPTH	SAMPLE NO.	BLOWS/6"		TYPE/SIZE	REC/ATT	P.I.D.	DESCRIPTION (COLOR, DENSITY, MOISTURE, PROPORTION, ETC.)
0.0	0.0							3" Bituminous Concrete
								9" Portland Cement Concrete
	2.5	1		6	DS	8/18		Mixture of Sand, Wood, Brick, Stone
			7	12				Fragments, Black, Dark Gray, Dry
5.0								Obstruction @ 4.0'
								Moved Boring to 23+53
								Obstruction @ 4.0'
								Moved Boring to 23+48
								Obstruction @ 4.0'
								Abandoned Boring Until Obstruction
								Can be Identified or a New Location is
								Cleared

Standard Penetration Test - Driving 2" O.D.
Sampler with 140 LB Hammer freely falling 30".

F.A.P. NO STP-3057 (4)N
SHA CONTRACT NO: BC320-001-815
BALTIMORE CITY CONTRACT NO. TR08310

RUMMEL · KLEPPER & KAHL

BORING LOG

Project: Central Avenue Storm Drain — Commission No.: 197-42

Location: 35+00 3.0' LT — Date: 11/04/98 to 11/05/98

BORING NO. RKK-202
Page 1 of 2
Boring Method HSA
Ground Surface El. 31.6 ft

BORING METHOD
HSA - Hollow Stem Augers
SSA - Solid Stem Augers
DC - Driving Casing
MD - Mud Drilling

SAMPLER TYPE
DS - Driven Split Barrel Sampler
PT - Pressed Shelby Tube
D- Denison
RC - Rock Core Barrel

GROUND WATER DEPTH
At Completion Dry ft
Caved Depth 18.0 ft
After * Hrs. ____ ft
Caved Depth ____ ft

STRATA DEPTH ft	SAMPLE DEPTH	SAMPLE NO.	BLOWS/6"		TYPE/SIZE	REC/ATT	P.I.D.	DESCRIPTION (COLOR, DENSITY, MOISTURE, PROPORTION, ETC.)
0.0	0.0							3.5" Bituminous Concrete 6" Brick
	2.5	1		5	DS	18/18	2.4	Mixture of Sand, Stone Fragment and Bituminous Concrete (FILL) Dry, Dark Brown and Black
			4	3				
	5.0	2	2	3	DS	12/18	2.1	
7.5			4					EL. 24.1
	7.5	3		2	DS	18/18	2.2	Silty Clay, Moist, Dark Brown
			1	3				
	10.0	4	2	3	DS	15/18	2.1	Trace Gravel and Shells @ 10.0' - 11.5' (FILL)
12.5			6					EL. 19.1
	12.5	5		13	DS	13/18	2.4	Medium - Coarse Sand, Trace - Large Gravel, Brick Fragments, White, Dark Brown, Dry - Damp (FILL)
			22	27				
15.0								EL. 16.6
	15.0	6	8	21	DS	15/18	2.1	Clayey Fine - Medium Sand, Trace Gravel, Medium - Dark Brown
17.5			25					EL. 14.1
	17.5	7		3	DS	16/18	2.3	Sand, Trace Silt, Wet, Dark Brown
			8	6				
20.0								EL. 11.6
	20.0	8	9	14	DS	18/18	2.4	Coarse Sand and Gravel, Trace Clay, Wet, Dark Brown
			17					
	22.5	9		10	DS	15/18	2.6	
			15	10				
25.0								EL. 6.6
	25.0	10	5	9	DS	16/18	2.5	Fine - Medium Sand, Trace Silt and Gravel, Wet, Light Brown and Tan
27.5			9					EL. 4.1
	27.5	11		15	DS	18/18	2.7	Fine Sand, Wet, Tan
			15	18				
30.0								EL. 1.6
	30.0	12	4	7	DS	2/18	2.6	Wet Sand and Gravel
32.5			11					EL. -0.9
	32.5	13		7	DS	16/18		Silty, Clayey, Sand, Moist, Mottled, Dark Brown, White, Tan (Residual Soil)
			5	9				

Standard Penetration Test - Driving 2" O.D. Sampler with 140 LB Hammer freely falling 30".

F.A.P. NO STP-3057 (4)N
SHA CONTRACT NO: BC320-001-815
BALTIMORE CITY CONTRACT NO. TR08310

RUMMEL · KLEPPER & KAHL

BORING LOG

Project: Central Avenue Storm Drain Commission No.: 197-42

Location: 35+00 3.0' LT Date: 11/04/98 to 11/05/98

BORING NO. RKK-202
Page 2 of 2
Boring Method HSA
Ground Surface El. 31.6 ft

BORING METHOD
HSA - Hollow Stem Augers
SSA - Solid Stem Augers
DC - Driving Casing
MD - Mud Drilling

SAMPLER TYPE
DS - Driven Split Barrel Sampler
PT - Pressed Shelby Tube
D- Denison
RC - Rock Core Barrel

GROUND WATER DEPTH
At Completion Dry ft
Caved Depth 18.0 ft
After * Hrs. ____ ft
Caved Depth ____ ft

STRATA DEPTH ft	SAMPLE DEPTH	SAMPLE NO.	BLOWS/6"		TYPE/SIZE	REC/ATT	P.I.D.	DESCRIPTION (COLOR, DENSITY, MOISTURE, PROPORTION, ETC.)
	35.0	14	13	9	DS	18/18		
			9					
	40.0	15	4	6	DS	18/18		
			8					
45.0								EL. -13.4
	45.0	16	4	11	DS	18/18		Clayey Silt, Trace Sand, Moist, White, Dark Greenish Gray (Residual Soil)
			20					
51.5	50.0	17	11	20	DS	18/18		EL. -19.9
			25					
								Bottom of Boring @ 51.5' *Backfilled @ Completion
								Boring Drilled Adjacent to Central Avenue Storm Drain

Standard Penetration Test - Driving 2" O.D. Sampler with 140 LB Hammer freely falling 30".

F.A.P. NO STP-3057 (4)N
SHA CONTRACT NO: BC320-001-815
BALTIMORE CITY CONTRACT NO. TR08310

RUMMEL · KLEPPER & KAHL

BORING LOG

Project: Central Avenue Storm Drain — Commission No.: 197-42

Location: 32+06 5.0' LT — Date: 11/05/98 to 11/06/98

BORING NO. RKK-101
Page 1 of 1
Boring Method HSA
Ground Surface El. 27.8 ft

BORING METHOD
HSA - Hollow Stem Augers
SSA - Solid Stem Augers
DC - Driving Casing
MD - Mud Drilling

SAMPLER TYPE
DS - Driven Split Barrel Sampler
PT - Pressed Shelby Tube
D- Denison
RC - Rock Core Barrel

GROUND WATER DEPTH
At Completion * ft
Caved Depth ____ ft
After ____ Hrs. ____ ft
Caved Depth ____ ft

STRATA DEPTH ft	SAMPLE DEPTH	SAMPLE NO.	BLOWS/6"		TYPE/SIZE	REC/ATT	P.I.D.	DESCRIPTION (COLOR, DENSITY, MOISTURE, PROPORTION, ETC.)
0.0	0.0							
								AIR
								EL. 16.3
11.5								
12.0	11.5	1			RC	5.25/6		
	12.0	2	12	13	DS	8/24	2.1	5.25" Granite Rock EL. 15.8
			13	21				
	14.0	3	6	6	DS	8/24	2.2	Medium - Coarse Sand and Gravel, Trace Silt, Wet, Dark Gray
			12	12				
	16.0	4	6	10	DS	8/24	2.4	
			10	10				
	20.0	5	50/4		DS	4/18	2.1	Large Gravel @ 20.0' - 21.5' and 22.5' - 24.0'
	22.5	6		52	DS	6/18	2.1	
			14	14				EL. 2.8
25.0								
	25.0	7	4	5	DS	15/18	2.2	Fine Sand, Moist - Wet, Tan and Light Gray
			6					
	27.5	8		12	DS	18/18	2.1	
29.0			13	19				EL. -1.2
								Bottom of Boring @ 29.0' *Drilled Through Drain invert. Not Possible to Obtain Water and Caved Measurements

Standard Penetration Test - Driving 2" O.D.
Sampler with 140 LB Hammer freely falling 30".

F.A.P. NO STP-3057 (4)N
SHA CONTRACT NO: BC320-001-815
BALTIMORE CITY CONTRACT NO. TR08310

RUMMEL · KLEPPER & KAHL

BORING LOG

Project: Central Avenue Storm Drain — Commission No.: 197-42

Location: 35+18 8.0' RT — Date: 11/04/98 to 11/05/98

BORING NO. RKK-102
Page 1 of 2
Boring Method HSA
Ground Surface El. 31.6 ft

BORING METHOD
HSA - Hollow Stem Augers
SSA - Solid Stem Augers
DC - Driving Casing
MD - Mud Drilling

SAMPLER TYPE
DS - Driven Split Barrel Sampler
PT - Pressed Shelby Tube
D- Denison
RC - Rock Core Barrel

GROUND WATER DEPTH
At Completion * ft
Caved Depth ____ ft
After ____ Hrs. ____ ft
Caved Depth ____ ft

STRATA DEPTH ft	SAMPLE DEPTH	SAMPLE NO.	BLOWS/6"		TYPE/SIZE	REC/ATT	P.I.D.	DESCRIPTION (COLOR, DENSITY, MOISTURE, PROPORTION, ETC.)
0.0	0.0							
								AIR
12.5								EL. 19.1
13.7	12.5	1			RC	6/14		6" Granite Rock EL. 17.9
	13.7	2		8	DS	24/24	358	
			9	6				Medium Sand, Trace - Little Gravel, Wet, Dark Gray
	15.7	3	5	4	DS	18/24	292	
17.7			5	23				Fuel Odor EL. 13.9
	17.7	4	18	9	DS	22/24	876	
			15	20				
			22					Medium Sand, Damp, Light Gray and Tan
	20.5	5		10	DS	19/18	2500	
			16	13				Trace - Medium Gravel @ 20.5' - 22.0'
23.5								EL. 8.1
	23.5	6		6	DS	15/18	376	
			9	9				Clayey Sand and Gravel, Trace Silt, Tan, Light Brown
27.5	26.0	7	5	7	DS	12/18	677	Water @ 26.0' EL. 4.1
	27.5	8	9	2	DS	10/18	45	
			3	6				Silty, Clayey, Sand, with Quartz Fragments, Tan
	30.0	9	5	6	DS	18/18	16	(Residual Soil)
			6					
	32.5	10		3	DS	15/18	2.1	
			4	7				

Standard Penetration Test - Driving 2" O.D. Sampler with 140 LB Hammer freely falling 30".

F.A.P. NO STP-3057 (4)N
SHA CONTRACT NO: BC320-001-815
BALTIMORE CITY CONTRACT NO. TR08310

RUMMEL · KLEPPER & KAHL

BORING LOG

Project: Central Avenue Storm Drain Commission No.: 197-42

Location: 35+18 8.0' RT Date: 11/04/98 to 11/05/98

BORING NO. RKK-102
Page 2 of 2
Boring Method HSA
Ground Surface El. 31.6 ft

BORING METHOD
HSA - Hollow Stem Augers
SSA - Solid Stem Augers
DC - Driving Casing
MD - Mud Drilling

SAMPLER TYPE
DS - Driven Split Barrel Sampler
PT - Pressed Shelby Tube
D- Denison
RC - Rock Core Barrel

GROUND WATER DEPTH
At Completion * ft
Caved Depth ____ ft
After ____ Hrs. ____ ft
Caved Depth ____ ft

STRATA DEPTH ft	SAMPLE DEPTH	SAMPLE NO.	BLOWS/6"		TYPE/SIZE	REC/ATT	P.I.D.	DESCRIPTION (COLOR, DENSITY, MOISTURE, PROPORTION, ETC.)
	35.0	11	4	5	DS	12/18		Clayey Silty Sand, Damp - Moist, Mottled Tan, White, Medium Brown
			7					
	40.0	12	4	11	DS	14/18		Hard @ 41.0' Large Mica "books" in Sample (Residual Soil)
			50/6					
	45.0	13	8	11	DS	18/18		
			15					
50.0								EL. -18.4
51.5	50.0	14	11	16	DS	18/18		Silty Sand, Damp, Dark Greenish Gray, White, Black (Residual Soil) EL. -19.9
			20					
								Bottom of Boring @ 51.5' *Drilled Through Drain Invert, Water and Caved Measurements Not Possible

Standard Penetration Test - Driving 2" O.D. Sampler with 140 LB Hammer freely falling 30".

F.A.P. NO STP-3057 (4)N
SHA CONTRACT NO: BC320-001-815
BALTIMORE CITY CONTRACT NO. TR08310

RUMMEL · KLEPPER & KAHL

BORING LOG

Project: Central Avenue Storm Drain — Commission No.: 197-42

Location: 32+06 12.0' RT — Date: 11/05/98 to 11/06/98

BORING NO. RKK-201
Page 1 of 1
Boring Method HSA
Ground Surface El. 27.8 ft

BORING METHOD
HSA - Hollow Stem Augers
SSA - Solid Stem Augers
DC - Driving Casing
MD - Mud Drilling

SAMPLER TYPE
DS - Driven Split Barrel Sampler
PT - Pressed Shelby Tube
D- Denison
RC - Rock Core Barrel

GROUND WATER DEPTH
At Completion 17.0 ft
Caved Depth ____ ft
After * Hrs. ____ ft
Caved Depth 22.2 ft

STRATA DEPTH ft	SAMPLE DEPTH	SAMPLE NO.	BLOWS/6"		TYPE/SIZE	REC/ATT	P.I.D.	DESCRIPTION (COLOR, DENSITY, MOISTURE, PROPORTION, ETC.)
0.0	0.0							5" Bituminous Concrete
								9" Crushed Stone
	2.5	1		7	DS	14/18	2.2	Medium Sand with Stone and Brick
			4	5				Fragments, Gravel, Shell Fragments,
								Dry - Moist, Dark Brown
	5.0	2	4	2	DS	14/18	2.4	
			2					
	7.5	3		4	DS	12/18	2.2	(FILL)
			2	5				
10.0								EL. 17.8
	10.0	4	WOH	2	DS	10/18	2.1	Clayey Medium Sand, Trace - Coarse
12.5			3					Sand, Wet, Medium Brown (Fill) EL. 15.3
	12.5	5		26	DS	6/18	2.1	
			46	19				Gravel and Sand with Crushed Stone
15.0								Fragments, Wet, Dark Gray (Fill) EL. 12.8
	15.0	6	16	13	DS	8/18	2.6	Sand and Medium - Large Gravel, Dry -
17.5			17					Damp, Tan, Light Gray, Dark Brown EL. 10.3
	17.5	7		6	DS	10/18	2.1	
			10	10				Fine Sand, Trace - Little Silt, Damp, Tan
	20.0	8	5	11	DS	10/18	2.2	
			12					
	22.5	9		11	DS	12/18	2.4	Wet @ 22.5'
			16	22				
26.5	25.0	10	10	20	DS	16/18	2.1	EL. 1.3
			22					
								Bottom of Boring @ 26.5'
								*Backfilled @ Completion

Standard Penetration Test - Driving 2" O.D. Sampler with 140 LB Hammer freely falling 30".

F.A.P. NO STP-3057 (4)N
SHA CONTRACT NO: BC320-001-815
BALTIMORE CITY CONTRACT NO. TR08310

RUMMEL · KLEPPER & KAHL

BORING LOG

Project: Central Avenue Storm Drain — Commission No.: 197-42

Location: 26+68 4.0' LT — Date: 11/08/98 to 11/09/98

BORING NO. RKK-103
Page 1 of 2
Boring Method HSA
Ground Surface El. 19.2 ft

BORING METHOD
HSA - Hollow Stem Augers
SSA - Solid Stem Augers
DC - Driving Casing
MD - Mud Drilling

SAMPLER TYPE
DS - Driven Split Barrel Sampler
PT - Pressed Shelby Tube
D- Denison
RC - Rock Core Barrel

GROUND WATER DEPTH
At Completion * ft
Caved Depth ____ ft
After ____ Hrs. ____ ft
Caved Depth ____ ft

STRATA DEPTH ft	SAMPLE DEPTH	SAMPLE NO.	BLOWS/6"		TYPE/SIZE	REC/ATT	P.I.D.	DESCRIPTION (COLOR, DENSITY, MOISTURE, PROPORTION, ETC.)
0.0	0.0							
								AIR
8.0								4" Brick EL. 11.2
8.5	8.0	1	6	RC	6/6			2" Portland Cement Concrete EL. 10.7
	8.5	2	3	2	DS	6/24	2.1	Sand and Gravel, Trace Silt, Wet, Dark Gray EL. 8.2
11.0	10.5	3	3	18	DS	16/24	2.3	
			4	3				Clayey Fine Sand, Moist, Dark Gray
13.0	12.5	4	3	6	DS	24/24	2.1	EL. 6.2
			4	4				Silty Clay, Moist, Dark Gray
			3					Organics in Samples
	15.0	5	3	2	DS	18/18	2.2	
	16.5	6	3	PT	PT	24/24	2.1	
			PT	PT				
19.0	18.5	7	PT	4	DS	16/18	2.1	EL. 0.2
			3	3				Interbedded Silty Fine Sand, Trace Clay and Medium - Coarse Sand, Wet, Medium to Dark Gray
	22.5	8		4	DS	18/18	2.3	Trace Wood, Organics @ 22.5' - 24.0'
			3	2				
25.0								EL. -5.8
	25.0	9	4	3	DS	18/18	2.2	Coarse Sand, Wet, Dark Gray
			5					
28.0	27.5	10		2	DS	18/18	2.3	EL. -8.8
			2	4				Organic Clayey Sand and Sand, Trace Wood, Moist, Dark Gray EL. -10.8
30.0								
31.0	30.0	11	3	8	DS	18/18		Fine Sand, Trace Silt, Moist, Medium Gray EL. -11.8
			24					
	32.5	12		8	DS	16/18		Sand and Gravel, Trace Silt, Wet, Medium Gray
			12	15				

Standard Penetration Test - Driving 2" O.D. Sampler with 140 LB Hammer freely falling 30".

F.A.P. NO STP-3057 (4)N
SHA CONTRACT NO: BC320-001-815
BALTIMORE CITY CONTRACT NO. TR08310

RUMMEL · KLEPPER & KAHL

BORING LOG

Project: Central Avenue Storm Drain Commission No.: 197-42

Location: 26+68 4.0' LT Date: 11/08/98 to 11/09/98

BORING NO. RKK-103
Page 2 of 2
Boring Method HSA
Ground Surface El. 19.2 ft

BORING METHOD
HSA - Hollow Stem Augers
SSA - Solid Stem Augers
DC - Driving Casing
MD - Mud Drilling

SAMPLER TYPE
DS - Driven Split Barrel Sampler
PT - Pressed Shelby Tube
D- Denison
RC - Rock Core Barrel

GROUND WATER DEPTH
At Completion * ft
Caved Depth ____ ft
After ____ Hrs. ____ ft
Caved Depth ____ ft

STRATA DEPTH ft	SAMPLE DEPTH	SAMPLE NO.	BLOWS/6"		TYPE/SIZE	REC/ATT	P.I.D.	DESCRIPTION (COLOR, DENSITY, MOISTURE, PROPORTION, ETC.)
	35.0	13	11	16	DS	16/18		Silt with Sand and Trace Clay, Dry - Damp, Dark Brown, Tan, Dark Gray (Residual Soil)
			21					
	40.0	14	35	37	DS	18/18		
			46					
46.5	45.0	15	11	29	DS	18/18		EL. -27.3
			37					
								Bottom of Boring @ 46.5' *Boring Drilled Through Drain Invert. Water and Caved Measurements Not Possible

Standard Penetration Test - Driving 2" O.D. Sampler with 140 LB Hammer freely falling 30".

F.A.P. NO STP-3057 (4)N
SHA CONTRACT NO: BC320-001-815
BALTIMORE CITY CONTRACT NO. TR08310

RUMMEL · KLEPPER & KAHL

BORING LOG

Project: Central Avenue Storm Drain — Commission No.: 197-42

Location: 26+95 7.0' RT — Date: 11/08/98 to 11/09/98

BORING NO. RKK-203	BORING METHOD	SAMPLER TYPE	GROUND WATER DEPTH
Page 1 of 2	HSA - Hollow Stem Augers	DS - Driven Split Barrel Sampler	At Completion 9.3 ft
Boring Method HSA	SSA - Solid Stem Augers	PT - Pressed Shelby Tube	Caved Depth ____ ft
Ground Surface El. 19.2 ft	DC - Driving Casing	D- Denison	After * Hrs. ____ ft
	MD - Mud Drilling	RC - Rock Core Barrel	Caved Depth 19.1 ft

STRATA DEPTH ft	SAMPLE DEPTH	SAMPLE NO.	BLOWS/6"		TYPE/SIZE	REC/ATT	P.I.D.	DESCRIPTION (COLOR, DENSITY, MOISTURE, PROPORTION, ETC.)
0.0	0.0							3" Bituminous Concrete
								6" Stone
	2.5	1		7	DS	12/18		Mixture of Sand, Wood, Brick Fragments,
			4	4				Shells, Silt, Dark Gray, Brown Red
								(FILL)
	5.0	2	1	2	DS	4/18		Wood @ 5.0' - 6.5'
			2					
	7.5	3		4	DS	16/18		Sand, Clay, Stone Fragments @ 7.5' -
			5	1				9.0'
								Fuel Odor @ 7.5' - 12.5'
	10.0	4	2	7	DS	14/18		
12.5			8					EL. 6.7
	12.5	5		1	DS	14/18		
			1	2				Clayey Silt, Moist, Medium - Dark
15.0								Grayish Brown . Wet @ 12.5' EL. 4.2
	15.0	6	1	2	DS	18/18		Organic Silty Clay, Moist, Dark Gray,
			3					Trace Wood
18.5	17.5	7		WOH	DS	18/18		EL. 0.7
			WOH	6				
								Medium Sand Interbedded with Clayey
	20.0	8	3	2	DS	18/18		Sand, Wet, Dark Gray, Trace Wood
22.5			3					Fragments EL. -3.3
	22.5	9		6	DS	18/18		
			6	12				Medium Sand, Wet, Medium Gray
25.0								Running Sand @ 22.5' - 30.0' EL. -5.8
	25.0	10	2	6	DS	16/18		Coarse Sand, Trace Gravel, Wet,
			9					Medium Gray and Tan
	27.5	11		5	DS	14/18		
			4	4				
30.0								EL. -10.8
	30.0	12	1	2	DS	18/18		Organic Clayey Silt, Moist, Medium -
			3					Dark Grayish Brown
33.5	32.5	13		7	DS	14/18		EL. -14.3
			8	17				Silty Sand, Trace Clay, Moist, Tan, Dark
								Brown (Residual Soil)

Standard Penetration Test - Driving 2" O.D. Sampler with 140 LB Hammer freely falling 30".

F.A.P. NO STP-3057 (4)N
SHA CONTRACT NO: BC320-001-815
BALTIMORE CITY CONTRACT NO. TR08310

RUMMEL · KLEPPER & KAHL

BORING LOG

Project: Central Avenue Storm Drain Commission No.: 197-42

Location: 26+95 7.0' RT Date: 11/08/98 to 11/09/98

BORING NO. RKK-203
Page 2 of 2
Boring Method HSA
Ground Surface El. 19.2 ft

BORING METHOD
HSA - Hollow Stem Augers
SSA - Solid Stem Augers
DC - Driving Casing
MD - Mud Drilling

SAMPLER TYPE
DS - Driven Split Barrel Sampler
PT - Pressed Shelby Tube
D- Denison
RC - Rock Core Barrel

GROUND WATER DEPTH
At Completion 9.3 ft
Caved Depth ____ ft
After * Hrs. ____ ft
Caved Depth 19.1 ft

STRATA DEPTH ft	SAMPLE DEPTH	SAMPLE NO.	BLOWS/6"		TYPE/SIZE	REC/ATT	P.I.D.	DESCRIPTION (COLOR, DENSITY, MOISTURE, PROPORTION, ETC.)
	35.0	14	10	26	DS	18/18		Silty Sand, Trace Clay, Moist, Dark Brown, Tan, Light Gray (Residual Soil)
			28					
	40.0	15	11	15	DS	18/18		Dry - Damp @ 40.0' - 41.5'
			21					
46.5	45.0	16	7	12	DS	18/18		Clayey Sand with Large Mica Flakes @ 45.0' - 46.5' EL. -27.3
			11					
								Bottom of Boring @ 46.5' *Backfilled @ Completion

Standard Penetration Test - Driving 2" O.D. Sampler with 140 LB Hammer freely falling 30".

F.A.P. NO STP-3057 (4)N
SHA CONTRACT NO: BC320-001-815
BALTIMORE CITY CONTRACT NO. TR08310

RUMMEL KLEPPER & KAHL

BORING LOG

Project: Central Avenue Commission No.: 197-42

Location: Station 1+08.0 26.3 LT Date: 10/06 - 10/07/99

BORING NO. CA-101
Page 1 of 2
Boring Method HSA
Ground Surface El. 6.11 ft.

BORING METHOD
HSA - Hollow Stem Augers
SSA - Solid Stem Augers
DC - Driving Casing
MD - Mud Drilling

SAMPLER TYPE
DS - Driven Split Barrel Sampler
PT - Pressed Shelby Tube
D- Denison
RC - Rock Core Barrel

GROUND WATER DEPTH
At Completion 4.0 ft.
Caved Depth 6.6 ft.
After * Hrs. * ft.
Caved Depth * ft.

STRATA DEPTH ft.	SAMPLE DEPTH	SAMPLE NO.	BLOWS ft.		TYPE - SIZE	REC/ATT (ft.)	DESCRIPTION (color density, moisture, proportion, etc.)
0.0	0.6						2" Bituminous Concrete 6" Cobblestones
	2.5	1		6	DS	0/18	Mixture of Wood Fragments, Sand, Clay, Stone Fragments, Brick Fragments, Shells, Wet, Black with Red, Organic Odor
			5	3			
	5.0	2	3	2	DS	10/18	Fill
			3				
	7.5	3		7	DS	8/18	
9.5			5	4			EL. -3.39
	10.0	4	1	1	DS	14/18	Interlayered Micaceous Silt and Sand, Wet, Dark Gray and Black EL. -6.39
12.5			1				
	12.5	5		1	DS	18/18	Micaceous Silt, Trace - Fine Sand, Moist, Dark Gray and Black EL. -8.89
			1	1			
15.0							
	15.0	6	1	1	DS	18/18	Micaceous Silt, Trace - Little Clay, Moist, Dark Gray and Black
			1				
	17.5	7		1	DS	18/18	
			1	2			EL. -13.89
20.0							
	20.0	8	3	5	DS	10/18	Sand with Clayey Silt Lenses, Moist - Wet, Dark Gray and Black EL. -16.39
22.5			5				
	22.5	9		5	DS	12/18	Silty Sand and Small to Large Gravel, Wet, Light - Dark Brown and White
			11	14			
26.1	25.0	10	10	18	DS	14/18	EL. -19.99
			10				
	27.5	11		8	DS	18/18	Interlayered Fine Silty Sand and Silt, Moist - Wet, White, Tan, Light Gray, Dark Brownish Red EL. -23.89
			20	23			
30.0							
	30.0	12	40	31	DS	14/18	Silty Medium Sand, Wet, Tan, Light Gray, White, Dark Brownish Red
			35				
	32.5	13		21	DS	18/18	Running Sand @ 30.0' - 39.5'
			28	44			

Standard Penetration Test - Driving 50.8 mm. O.D. Sampler with 63.5 kg. Hammer freely falling 0.76 m.

F.A.P. NO STP-3057 (4)N
SHA CONTRACT NO: BC320-001-815
BALTIMORE CITY CONTRACT NO. TR08310

RUMMEL KLEPPER & KAHL

BORING LOG

Project: Central Avenue — Commission No.: 197-42

Location: Station 1+08.0 26.3 LT — Date: 10/06 - 10/07/99

BORING NO. CA-101
Page 2 of 2
Boring Method HSA
Ground Surface El. 6.11 ft.

BORING METHOD
HSA - Hollow Stem Augers
SSA - Solid Stem Augers
DC - Driving Casing
MD - Mud Drilling

SAMPLER TYPE
DS - Driven Split Barrel Sampler
PT - Pressed Shelby Tube
D- Denison
RC - Rock Core Barrel

GROUND WATER DEPTH
At Completion 4.0 ft.
Caved Depth 6.6 ft.
After * Hrs. * ft.
Caved Depth * ft.

STRATA DEPTH ft.	SAMPLE DEPTH	SAMPLE NO.	BLOWS ft.		TYPE - SIZE	REC/ATT (ft.)	DESCRIPTION (color density, moisture, proportion, etc.)
	35.0	14	36	74	DS	18/18	Silty Medium Sand, Wet, Tan, Light Gray, White, Dark Brownish Red
			100/4				
							EL. -33.89
40.0	39.5	15		6	DS	18/18	
41.0			10	28			Clayey Coarse Sand, Moist, White and Light Gray (Residual Soil) EL. -34.89
							Bottom of Boring @ 41.0'
							*Backfilled @ Completion

Standard Penetration Test - Driving 50.8 mm. O.D. Sampler with 63.5 kg. Hammer freely falling 0.76 m.

F.A.P. NO STP-3057 (4)N
SHA CONTRACT NO: BC320-001-815
BALTIMORE CITY CONTRACT NO. TR08310

RUMMEL KLEPPER & KAHL

BORING LOG

Project: Central Avenue — Commission No.: 197-42

Location: Station 1+83.5 27.6 RT — Date: 10/06 - 10/07/99

BORING NO. CA-102
Page 1 of 2
Boring Method HSA
Ground Surface El. 6.52 ft.

BORING METHOD
HSA - Hollow Stem Augers
SSA - Solid Stem Augers
DC - Driving Casing
MD - Mud Drilling

SAMPLER TYPE
DS - Driven Split Barrel Sampler
PT - Pressed Shelby Tube
D- Denison
RC - Rock Core Barrel

GROUND WATER DEPTH
At Completion 6.8 ft.
Caved Depth 9.8 ft.
After * Hrs. * ft.
Caved Depth * ft.

STRATA DEPTH ft.	SAMPLE DEPTH	SAMPLE NO.	BLOWS ft.		TYPE - SIZE	REC/ATT (ft.)	DESCRIPTION (color density, moisture, proportion, etc.)
0.0	0.6						2" Bituminous Concrete 6" Cobblestones EL. 5.92
	2.5	1		17	DS	14/18	Mixture of Sand, Gravel, Silt, Wood and Brick Fragments, Wet, Black, Red (Fill)
			19	20			
	5.0	2	8	6	DS	3/18	Water on Rods @ 5.0' EL. -0.98
7.5			4				
	7.5	3		1	DS	10/18	Silty Sand, Trace Clay, Wet, Dark Gray, Black EL. -3.98
			3	2			
10.5							
	10.0	4	3	1	DS	12/18	Silt, Trace Clay, Wet, Black and Dark Gray Interlayered Sand Lenses @ 12.5' - 14.0' EL. -8.48
			1				
	12.5	5		1	DS	16/18	
			1	2			
15.0							
	15.0	6	1	2	DS	16/18	Clayey Micaceous Silt, Wet, Dark Gray EL. -10.98
17.5			2				
	17.5	7		1	DS	12/18	Silty Clay, Trace Fine Sand and Gravel, Wet, Dark Gray EL. -12.98
19.5			1	2			
	20.0	8	6	13	DS	12/18	Silty Sand and Small to Large Gravel, Trace Clay, Wet, Light - Dark Brown
			18				
	22.5	9		13	DS	12/18	
			13	6			
	25.0	10		4	DS	18/18	5.0' Running Sand and Gravel @ 25.0' EL. -20.98
27.5			15	14			
	27.5	11		12	DS	14/18	Silty Medium Sand, Wet, White, Light Gray, Dark Brown
			14	24			
	30.0	12	28	40	DS	18/18	EL. -25.98
32.5			80				
	32.5	13		18	DS	18/18	Fine Silty Sand with Silt Lenses - Moist - Wet, Tan, Medium - Dark Brown
			49	89			

Standard Penetration Test - Driving 50.8 mm. O.D. Sampler with 63.5 kg. Hammer freely falling 0.76 m.

F.A.P. NO STP-3057 (4)N
SHA CONTRACT NO: BC320-001-815
BALTIMORE CITY CONTRACT NO. TR08310

RUMMEL KLEPPER & KAHL

BORING LOG

Project: Central Avenue Commission No.: 197-42

Location: Station 1+83.5 27.6 RT Date: 10/06 - 10/07/99

BORING NO. CA-102
Page 2 of 2
Boring Method HSA
Ground Surface El. 6.52 ft.

BORING METHOD
HSA - Hollow Stem Augers
SSA - Solid Stem Augers
DC - Driving Casing
MD - Mud Drilling

SAMPLER TYPE
DS - Driven Split Barrel Sampler
PT - Pressed Shelby Tube
D- Denison
RC - Rock Core Barrel

GROUND WATER DEPTH
At Completion 6.8 ft.
Caved Depth 9.8 ft.
After * Hrs. * ft.
Caved Depth * ft.

STRATA DEPTH ft.	SAMPLE DEPTH	SAMPLE NO.	BLOWS ft.		TYPE - SIZE	REC/ATT (ft.)	DESCRIPTION (color density, moisture, proportion, etc.)
36.5	35.0	14	21	30	DS	18/18	EL. -29.98
	36.5		67				
							Bottom of Boring @ 36.5'
							*Backfilled @ Completion

Standard Penetration Test - Driving 50.8 mm. O.D.
Sampler with 63.5 kg. Hammer freely falling 0.76 m.

F.A.P. NO STP-3057 (4)N
SHA CONTRACT NO: BC320-001-815
BALTIMORE CITY CONTRACT NO. TR08310

RUMMEL KLEPPER & KAHL

BORING LOG

Project: Central Avenue Commission No.: 197-42

Location: Station 4+12.9 12.0 LT Date: 10/11 - 10/12/99

BORING NO. CA-103
Page 1 of 1
Boring Method HSA
Ground Surface El. 8.6 ft.

BORING METHOD
HSA - Hollow Stem Augers
SSA - Solid Stem Augers
DC - Driving Casing
MD - Mud Drilling

SAMPLER TYPE
DS - Driven Split Barrel Sampler
PT - Pressed Shelby Tube
D- Denison
RC - Rock Core Barrel

GROUND WATER DEPTH
At Completion DRY ft.
Caved Depth _____ ft.
After _____ Hrs. _____ ft.
Caved Depth _____ ft.

STRATA DEPTH ft.	SAMPLE DEPTH	SAMPLE NO.	BLOWS ft.		TYPE - SIZE	REC/ATT (ft.)	DESCRIPTION (color density, moisture, proportion, etc.)
0.0	0.8						4" Bituminous Concrete
							6" Cobblestones
	2.5	1		2	DS		Sand with Clay, Brick Fragments, Fill
4.2			1	2			EL. 4.4
							Hit Obstruction @ 4.2 Feet. Boring Abandoned
							Boring Backfilled

Standard Penetration Test - Driving 50.8 mm. O.D. Sampler with 63.5 kg. Hammer freely falling 0.76 m.

F.A.P. NO STP-3057 (4)N
SHA CONTRACT NO: BC320-001-815
BALTIMORE CITY CONTRACT NO. TR08310

RUMMEL KLEPPER & KAHL

BORING LOG

Project: Central Avenue Commission No.: 197-42

Location: Station 4+45.0 22.4 LT Date: 10/22 - 10/23/99

BORING NO. CA-103A
Page 1 of 1
Boring Method HSA
Ground Surface El. 9.28 ft.

BORING METHOD
HSA - Hollow Stem Augers
SSA - Solid Stem Augers
DC - Driving Casing
MD - Mud Drilling

SAMPLER TYPE
DS - Driven Split Barrel Sampler
PT - Pressed Shelby Tube
D- Denison
RC - Rock Core Barrel

GROUND WATER DEPTH
At Completion DRY ft.
Caved Depth _____ ft.
After _____ Hrs. _____ ft.
Caved Depth _____ ft.

STRATA DEPTH ft.	SAMPLE DEPTH	SAMPLE NO.	BLOWS ft.	TYPE - SIZE	REC/ATT (ft.)	DESCRIPTION (color density, moisture, proportion, etc.)
0.0	0.0					4" Bituminous Concrete
	1.5					6" Cobblestones
						Refusal of Rock @ 1.5' EL. 7.78
						Boring Backfilled

Standard Penetration Test - Driving 50.8 mm. O.D. Sampler with 63.5 kg. Hammer freely falling 0.76 m.

F.A.P. NO STP-3057 (4)N
SHA CONTRACT NO: BC320-001-815
BALTIMORE CITY CONTRACT NO. TR08310

RUMMEL KLEPPER & KAHL

BORING LOG

Project: Central Avenue — Commission No.: 197-42

Location: Station 5+36.3 21.1 RT — Date: 10/7 - 10/08/99

BORING NO. CA-104
Page 1 of 2
Boring Method HSA
Ground Surface El. 9.13 ft.

BORING METHOD
HSA - Hollow Stem Augers
SSA - Solid Stem Augers
DC - Driving Casing
MD - Mud Drilling

SAMPLER TYPE
DS - Driven Split Barrel Sampler
PT - Pressed Shelby Tube
D- Denison
RC - Rock Core Barrel

GROUND WATER DEPTH
At Completion 8.5 ft.
Caved Depth 13.9 ft.
After 96 Hrs. 7.0 ft.
Caved Depth 9.8 ft.

STRATA DEPTH ft.	SAMPLE DEPTH	SAMPLE NO.	BLOWS ft.		TYPE - SIZE	REC/ATT (ft.)	DESCRIPTION (color density, moisture, proportion, etc.)
0.0	0.75						9" Portland Concrete Cement EL. 8.38
	2.5	1	2	1 3	DS	12/18	Mixture of Sand, Clay, Gravel, Stone Fragments, Brick Fragments, Wood, Wet, Black, Dark Gray, Red (Fill) EL. 2.63
6.5	5.0	2	4	5 3	DS	5/18	
	7.5	3	2	1 2	DS	18/18	Clayey Micaceous Silt, Trace Organics, Moist - Wet, Dark Gray, Black
	10.0	4	1	2 1	DS	8/18	Trace Gravel and Sand @ 10.0' - 11.5' Water @ 10.0' During Drilling
	12.5	5	2	3 1	DS	16/18	Trace Sand @ 12.5' - 14.0'
	15.0	6	1	2 2	DS	18/18	
	17.5	7	1	2 2	DS	18/18	
21.0	20.0	8	3	1 2	DS	14/18	EL. -11.87
22.0	22.5	9	33	17 34	DS	12/18	Silty Sand, Trace Clay, Medium - Dark Gray, Medium Brown, Moist - Wet EL. -12.87
	25.0	10	6	5 8	DS	10/18	Silty Sand and Small to Large Gravel, Wet, Medium - Dark Brown, Tan with Light - Medium Gray Running Sand @ 22.0' - 30.0' EL. -21.37
	27.5	11	7	7 6	DS	14/18	
30.5	30.0	12	58	7 40	DS	16/18	
	32.5	13	25	20 35	DS	18/18	Silty Sand, Wet, Tan, Light Brown Trace Gravel @ 32.5' - 34.0' Little Gravel 35.0' - 40.8'

Standard Penetration Test - Driving 50.8 mm. O.D. Sampler with 63.5 kg. Hammer freely falling 0.76 m.

F.A.P. NO STP-3057 (4)N
SHA CONTRACT NO: BC320-001-815
BALTIMORE CITY CONTRACT NO. TR08310

RUMMEL KLEPPER & KAHL

BORING LOG

Project: Central Avenue — Commission No.: 197-42

Location: Station 5+36.3 21.1 RT — Date: 10/07 - 10/08/99

BORING NO. CA-104
Page 2 of 2
Boring Method HSA
Ground Surface El. 9.13 ft.

BORING METHOD
HSA - Hollow Stem Augers
SSA - Solid Stem Augers
DC - Driving Casing
MD - Mud Drilling

SAMPLER TYPE
DS - Driven Split Barrel Sampler
PT - Pressed Shelby Tube
D- Denison
RC - Rock Core Barrel

GROUND WATER DEPTH
At Completion 8.5 ft.
Caved Depth 13.9 ft.
After 96 Hrs. 7.0 ft.
Caved Depth 9.8 ft.

STRATA DEPTH ft.	SAMPLE DEPTH	SAMPLE NO.	BLOWS ft.		TYPE - SIZE	REC/ATT (ft.)	DESCRIPTION (color density, moisture, proportion, etc.)
	35.0	14	8	21	DS	16/18	Silty Sand, Wet, Tan, Light Brown
			30				
							Trace Gravel @ 32.5' - 34.0'
							Little Gravel @ 35.0' - 40.8'
40.8	39.5	15		31	DS	14/18	EL. -31.67
	40.8		40	100/3			Bottom of Boring @ 40.8'

Standard Penetration Test - Driving 50.8 mm. O.D. Sampler with 63.5 kg. Hammer freely falling 0.76 m.

F.A.P. NO STP-3057 (4)N
SHA CONTRACT NO: BC320-001-815
BALTIMORE CITY CONTRACT NO. TR08310

RUMMEL KLEPPER & KAHL

BORING LOG

Project: Central Avenue Commission No.: 197-42

Location: Station 7+91.5 22.0 LT Date: 10/11 - 10/12/99

BORING NO. CA-105
Page 1 of 1
Boring Method HSA
Ground Surface El. 8.02 ft.

BORING METHOD
HSA - Hollow Stem Augers
SSA - Solid Stem Augers
DC - Driving Casing
MD - Mud Drilling

SAMPLER TYPE
DS - Driven Split Barrel Sampler
PT - Pressed Shelby Tube
D- Denison
RC - Rock Core Barrel

GROUND WATER DEPTH
At Completion DRY ft.
Caved Depth _____ ft.
After _____ Hrs. _____ ft.
Caved Depth _____ ft.

STRATA DEPTH ft.	SAMPLE DEPTH	SAMPLE NO.	BLOWS ft.		TYPE - SIZE	REC/ATT (ft.)	DESCRIPTION (color density, moisture, proportion, etc.)
0.0							9.5" Portland Concrete Cement
	1.5						9" Crushed Stone
	2.5	1		12	DS	6/12	Mixture of Sand and Rock Fragments
			16				Boring Halted During Split Barrel Sampling on an Obstruction @ 3.5 Feet EL. 4.52
							Boring Backfilled @ Completion

Standard Penetration Test - Driving 50.8 mm. O.D. Sampler with 63.5 kg. Hammer freely falling 0.76 m.

F.A.P. NO STP-3057 (4)N
SHA CONTRACT NO: BC320-001-815
BALTIMORE CITY CONTRACT NO. TR08310

RUMMEL KLEPPER & KAHL

BORING LOG

Project: Central Avenue Commission No.: 197-42

Location: Station 7+68.7 30.3 LT Date: 10/22 - 10/23/99

BORING NO. CA-105A
Page 1 of 1
Boring Method HSA
Ground Surface El. 7.78 ft.

BORING METHOD
HSA - Hollow Stem Augers
SSA - Solid Stem Augers
DC - Driving Casing
MD - Mud Drilling

SAMPLER TYPE
DS - Driven Split Barrel Sampler
PT - Pressed Shelby Tube
D- Denison
RC - Rock Core Barrel

GROUND WATER DEPTH
At Completion DRY ft.
Caved Depth _____ ft.
After _____ Hrs. _____ ft.
Caved Depth _____ ft.

STRATA DEPTH ft.	SAMPLE DEPTH	SAMPLE NO.	BLOWS ft.	TYPE - SIZE	REC/ATT (ft.)	DESCRIPTION (color density, moisture, proportion, etc.)
0.0						9" Concrete
	1.4					8" Crushed Stone EL. 6.38
						Mixture of Sand, Clay, Stone, Damp, Light Brown
5.0						Refusal on Concrete @ 5.0' EL. 2.78
	5.0					Bottom of Boring @ 5.0'

Standard Penetration Test - Driving 50.8 mm. O.D. Sampler with 63.5 kg. Hammer freely falling 0.76 m.

F.A.P. NO STP-3057 (4)N
SHA CONTRACT NO: BC320-001-815
BALTIMORE CITY CONTRACT NO. TR08310

RUMMEL KLEPPER & KAHL

BORING LOG

Project: Central Avenue Commission No.: 197-42

Location: Station 9+22.4 22.0 RT Date: 10/07 - 10/08/99

BORING NO. CA-106
Page 1 of 1
Boring Method HSA
Ground Surface El. 8.07 ft.

BORING METHOD
HSA - Hollow Stem Augers
SSA - Solid Stem Augers
DC - Driving Casing
MD - Mud Drilling

SAMPLER TYPE
DS - Driven Split Barrel Sampler
PT - Pressed Shelby Tube
D- Denison
RC - Rock Core Barrel

GROUND WATER DEPTH
At Completion DRY ft.
Caved Depth _____ ft.
After _____ Hrs. _____ ft.
Caved Depth _____ ft.

STRATA DEPTH ft.	SAMPLE DEPTH	SAMPLE NO.	BLOWS ft.		TYPE - SIZE	REC/ATT (ft.)	DESCRIPTION (color density, moisture, proportion, etc.)
0.0	0.9						4" Bituminous Concrete
							6" Cobblestones EL. 7.17
	2.5	1		4	DS		Mixture of Sand, Silt, Gravel, Stone
			3	4			Fragments, Brick Fragments, Moist, Dark
							Brown, Red
	5.0	2	5	9	DS		
7.5			18				EL. 0.57
	7.5						
							Obstruction @ 7.5'
							Boring Backfilled

F.A.P. NO STP-3057 (4)N
SHA CONTRACT NO: BC320-001-815
BALTIMORE CITY CONTRACT NO. TR08310

Standard Penetration Test - Driving 50.8 mm. O.D. Sampler with 63.5 kg. Hammer freely falling 0.76 m.

RUMMEL KLEPPER & KAHL

BORING LOG

Project: Central Avenue — Commission No.: 197-42

Location: Station 9+86 20.5 RT — Date: 10/11 - 10/12/99

BORING NO. CA-107
Page 1 of 2
Boring Method HSA
Ground Surface El. 8.17 ft.

BORING METHOD
HSA - Hollow Stem Augers
SSA - Solid Stem Augers
DC - Driving Casing
MD - Mud Drilling

SAMPLER TYPE
DS - Driven Split Barrel Sampler
PT - Pressed Shelby Tube
D- Denison
RC - Rock Core Barrel

GROUND WATER DEPTH
At Completion 7.5 ft.
Caved Depth 14.3 ft.
After * Hrs. * ft.
Caved Depth * ft.

STRATA DEPTH ft.	SAMPLE DEPTH	SAMPLE NO.	BLOWS ft.		TYPE - SIZE	REC/ATT (ft.)	DESCRIPTION (color density, moisture, proportion, etc.)
0.0	0.9						4" Bituminous Concrete
							6" Cobblestones EL. 7.27
	2.5	1		5	DS	10/18	Mixture of Sand, Silt, Clay with Stone
			5	6			Fragments, Brick Fragments, Dark Brown,
							Black, Red, Moist - Wet (Fill)
	5.0	2	3	2	DS	12/18	
7.5			3				EL. 0.67
	7.5	3		2	DS	14/18	
			2	3			Silt, Trace Fine Sand, Organic Odor, Moist,
10.0							Dark Gray and Black EL. -1.83
	10.0	4	2	1	DS	8/18	Silty Clay Interlayered with Medium Sand,
12.5			1				Moist - Wet, Dark Brown Black, Dark Gray
	12.5	5		2	DS	10/18	EL. -4.33
			1	4			Clayey Fine Sand and Interlayered Fine
							Sandy Clay, Wet, Dark Gray, Dark Brown
	15.0	6	2	1	DS	6/18	Water on Rods @ 12.0'
17.5			1				EL. -9.33
	17.5	7		4	DS	14/18	
			3	3			Silty Sand and Gravel, Wet, Medium - Dark
							Brown
	20.0	8	5	4	DS	8/18	Little Gravel @ 20.0' - 21.5'
			2				
	22.5	9		5	DS	8/18	
			5	7			
	25.0	10	6	7	DS	5/18	
			9				
28.0	27.5	11		12	DS	18/18	EL. -19.83
			32	94			Fine Sand, Wet, White, Light Brown, Light
							Gray
	30.0	12	7	22	DS	18/18	Running Sand @ 30.0' - 36.5'
			77				
	32.5	13		20	DS	10/18	
			100/5				

Standard Penetration Test - Driving 50.8 mm. O.D. Sampler with 63.5 kg. Hammer freely falling 0.76 m.

F.A.P. NO STP-3057 (4)N
SHA CONTRACT NO: BC320-001-815
BALTIMORE CITY CONTRACT NO. TR08310

RUMMEL KLEPPER & KAHL

BORING LOG

Project: Central Avenue Commission No.: 197-42

Location: Station 9+86.0 20.5 RT Date: 10/11 - 10/12/99

BORING NO. CA-107
Page 2 of 2
Boring Method HSA
Ground Surface El. 8.17 ft.

BORING METHOD
HSA - Hollow Stem Augers
SSA - Solid Stem Augers
DC - Driving Casing
MD - Mud Drilling

SAMPLER TYPE
DS - Driven Split Barrel Sampler
PT - Pressed Shelby Tube
D- Denison
RC - Rock Core Barrel

GROUND WATER DEPTH
At Completion 7.5 ft.
Caved Depth 14.3 ft.
After * Hrs. * ft.
Caved Depth * ft.

STRATA DEPTH ft.	SAMPLE DEPTH	SAMPLE NO.	BLOWS ft.		TYPE - SIZE	REC/ATT (ft.)	DESCRIPTION (color density, moisture, proportion, etc.)
36.5	35.0	14	16	36	DS	18/18	EL. -28.33
	36.5		37				
							Bottom of Boring @ 36.5'
							* Backfilled @ Completion

Standard Penetration Test - Driving 50.8 mm. O.D. Sampler with 63.5 kg. Hammer freely falling 0.76 m.

F.A.P. NO STP-3057 (4)N
SHA CONTRACT NO: BC320-001-815
BALTIMORE CITY CONTRACT NO. TR08310

RUMMEL KLEPPER & KAHL

BORING LOG

Project: Central Avenue — Commission No.: 197-42

Location: Station 10+30.8 15.5 LT — Date: 10/12 - 10/13/99

BORING NO. CA-108
Page 1 of 1
Boring Method HSA
Ground Surface El. 8.76 ft.

BORING METHOD
HSA - Hollow Stem Augers
SSA - Solid Stem Augers
DC - Driving Casing
MD - Mud Drilling

SAMPLER TYPE
DS - Driven Split Barrel Sampler
PT - Pressed Shelby Tube
D- Denison
RC - Rock Core Barrel

GROUND WATER DEPTH
At Completion 7.5 ft.
Caved Depth 11.6 ft.
After 24 Hrs. 7.5 ft.
Caved Depth 11.3 ft.

STRATA DEPTH ft.	SAMPLE DEPTH	SAMPLE NO.	BLOWS ft.		TYPE - SIZE	REC/ATT (ft.)	DESCRIPTION (color density, moisture, proportion, etc.)
0.0	0.7						9" Portland Concrete Cement EL. 8.06
	2.5	1	4	5	DS	2/18	Mixture of Sandy Clay, Gravel, Wet, Dark Brown (Fill)
			4				
5.0							
	5.0	2	4	6	DS	10/18	
7.5			6				Clayey Sand and Gravel @ 7.5' - 10.0', Wet
	7.5	3		2	DS	2/18	
			2	3			
10.0							Silty Sand with Cobbles, Zones of Clay
	10.0	4	3	4	DS	10/18	EL. -1.24
12.5			3				EL. -3.74
	12.5	5		3	DS	8/18	
			5	8			Silty Clay with Sand, Trace Shells, Wet, Dark Gray EL. - 6.24
15.0							
	15.0	6	1	1	DS	15/18	Silty Clay with Zones of Silty Sand, Wet, Dark Gray, Trace Organics
			2				
	17.5	7		7	DS	18/18	
19.0			8	8			EL. -10.24
	20.0	8	5	6	DS	8/18	Sand and Gravel, Wet, Tan, Dark Brown Running Sand @ 19.0' - 25.0'
			16				
	22.5	9		2	DS	6/18	
			4	6			
	25.0	10	3	7	DS	15/18	Hard Drilling 27.0' - 28.0'
28.0			7				Refusal @ 28.0' EL. -19.24
	27.5	11		100/2	DS	1/18	
	28.0	12	100/0				Bottom of Boring @ 28.0'

Standard Penetration Test - Driving 50.8 mm. O.D. Sampler with 63.5 kg. Hammer freely falling 0.76 m.

F.A.P. NO STP-3057 (4)N
SHA CONTRACT NO: BC320-001-815
BALTIMORE CITY CONTRACT NO. TR08310

RUMMEL KLEPPER & KAHL

BORING LOG

Project: Central Avenue Commission No.: 197-42

Location: Station 12+60.6 17.0 LT Date: 10/05 - 10/06/99

BORING NO. CA-109
Page 1 of 1
Boring Method HSA
Ground Surface El. 9.95 ft.

BORING METHOD
HSA - Hollow Stem Augers
SSA - Solid Stem Augers
DC - Driving Casing
MD - Mud Drilling

SAMPLER TYPE
DS - Driven Split Barrel Sampler
PT - Pressed Shelby Tube
D- Denison
RC - Rock Core Barrel

GROUND WATER DEPTH
At Completion DRY ft.
Caved Depth _____ ft.
After _____ Hrs. _____ ft.
Caved Depth _____ ft.

STRATA DEPTH ft.	SAMPLE DEPTH	SAMPLE NO.	BLOWS ft.		TYPE - SIZE	REC/ATT (ft.)	DESCRIPTION (color density, moisture, proportion, etc.)
0.0							4' Bituminous Concrete
							12" Portland Concrete Cement
	2.5	1		15	DS	5/18	Sand, Stone, Brick, Wood, Silt, Wet, Black
			9	7			Fill
5.0							EL. 4.95
	5.0						Bottom of Boring @ 5.0'
							Hit Obstruction @ 5.0'
							Boring Abandoned

Standard Penetration Test - Driving 50.8 mm. O.D. Sampler with 63.5 kg. Hammer freely falling 0.76 m.

F.A.P. NO STP-3057 (4)N
SHA CONTRACT NO: BC320-001-815
BALTIMORE CITY CONTRACT NO. TR08310

RUMMEL KLEPPER & KAHL

BORING LOG

Project: Central Avenue Commission No.: 197-42

Location: Station 12+74.5 17.5 LT Date: 10/05 - 10/06/99

BORING NO. CA-109A
Page 1 of 1
Boring Method HSA
Ground Surface El. 9.99 ft.

BORING METHOD
HSA - Hollow Stem Augers
SSA - Solid Stem Augers
DC - Driving Casing
MD - Mud Drilling

SAMPLER TYPE
DS - Driven Split Barrel Sampler
PT - Pressed Shelby Tube
D- Denison
RC - Rock Core Barrel

GROUND WATER DEPTH
At Completion DRY ft.
Caved Depth _____ ft.
After _____ Hrs. _____ ft.
Caved Depth _____ ft.

STRATA DEPTH ft.	SAMPLE DEPTH	SAMPLE NO.	BLOWS ft.		TYPE - SIZE	REC/ATT (ft.)	DESCRIPTION (color density, moisture, proportion, etc.)
0.0							7" Bituminous Concrete
	1.4						10" Portland Concrete Cement
	2.5	1		5	DS	10/18	Medium Sand, Trace Gravel, Clay, Burnt
			12	18			Wood, Coal Black Wet, Fill
5.0							EL. 4.99
	5.0						Bottom of Boring @ 5.0'
							Hit Obstruction @ 5.0'
							Boring Abandoned

Standard Penetration Test - Driving 50.8 mm. O.D. Sampler with 63.5 kg. Hammer freely falling 0.76 m.

F.A.P. NO STP-3057 (4)N
SHA CONTRACT NO: BC320-001-815
BALTIMORE CITY CONTRACT NO. TR08310

RUMMEL KLEPPER & KAHL

BORING LOG

Project: Central Avenue — Commission No.: 197-42

Location: Station 13+65.7 12.5 RT — Date: 10/05 - 10/06/99

BORING NO. CA-110
Page 1 of 1
Boring Method HSA
Ground Surface El. 10.37 ft.

BORING METHOD
HSA - Hollow Stem Augers
SSA - Solid Stem Augers
DC - Driving Casing
MD - Mud Drilling

SAMPLER TYPE
DS - Driven Split Barrel Sampler
PT - Pressed Shelby Tube
D- Denison
RC - Rock Core Barrel

GROUND WATER DEPTH
At Completion DRY ft.
Caved Depth _____ ft.
After _____ Hrs. _____ ft.
Caved Depth _____ ft.

STRATA DEPTH ft.	SAMPLE DEPTH	SAMPLE NO.	BLOWS ft.		TYPE - SIZE	REC/ATT (ft.)	DESCRIPTION (color density, moisture, proportion, etc.)
0.0	0.5						6" Bituminous Concrete
	2.5	1		6	DS	3/18	Mixture of Sand, Stone, Wood, Silt, Clay, Brick, Black, Wet (Fill)
			9	12			
5.0							EL. 5.37
	5.0						Bottom of Boring @ 5.0' Hit Obstruction @ 5.0' Boring Abandoned

Standard Penetration Test - Driving 50.8 mm. O.D. Sampler with 63.5 kg. Hammer freely falling 0.76 m.

F.A.P. NO STP-3057 (4)N
SHA CONTRACT NO: BC320-001-815
BALTIMORE CITY CONTRACT NO. TR08310

RUMMEL KLEPPER & KAHL

BORING LOG

Project: Central Avenue — Commission No.: 197-42

Location: Station 15+99.0 17.5 LT — Date: 10/12 - 10/13/99

BORING NO. CA-111
Page 1 of 2
Boring Method HSA
Ground Surface El. 11.71 ft.

BORING METHOD
HSA - Hollow Stem Augers
SSA - Solid Stem Augers
DC - Driving Casing
MD - Mud Drilling

SAMPLER TYPE
DS - Driven Split Barrel Sampler
PT - Pressed Shelby Tube
D- Denison
RC - Rock Core Barrel

GROUND WATER DEPTH
At Completion 7.3 ft.
Caved Depth 14.9 ft.
After 24 Hrs. 7.5 ft.
Caved Depth 12.6 ft.

STRATA DEPTH ft.	SAMPLE DEPTH	SAMPLE NO.	BLOWS ft.		TYPE - SIZE	REC/ATT (ft.)	DESCRIPTION (color density, moisture, proportion, etc.)
0.0							5" Bituminous Concrete
	1.2						9" Portland Concrete Cement EL. 10.51
	2.5	1		4	DS	10/18	Mixtures of Sand, Stone, Brick Fragments,
			5	5			Moist to Wet, Dark Brown EL. 9.21
	5.0	2	2	3	DS	16/18	Clayey Sand, Trace Silt @ 5.0' - 7.5'
			4				
	7.5	3		2	DS	5/18	Sandy Stone Fragments @ 7.5' - 10.0'
			2	2			
	10.0	4	7	5	DS	8/18	Silty Sand and Gravel @ 10.0' - 12.5'
			5				
	12.5	5		1	DS	4/18	Sand, Gravel, Stone Fragments @ 12.5' - 15.0' (Fill)
			2	2			
15.0							EL. -3.29
	15.0	6	2	2	DS	8/18	Medium Sand, Trace - Little Gravel, Trace Silt and Clay, Wet, Dark Gray
			5				
	17.5	7		12	DS	14/18	
			5	8			
20.0							EL. -8.29
	20.0	8	7	9	DS	14/18	Silty Sand with Some to and Gravel, Wet, Light - Dark Brown
			8				
	22.5	9		6	DS	14/18	Running Sand @ 22.5' - 39.5'
			5	5			
	25.0	10	4	5	DS	14/18	
			7				
	27.5	11		6	DS	16/18	
			6	5			
	30.0	12	7	28	DS	16/18	
			19				
	32.5	13		28	DS	12/18	
			33	44			

Standard Penetration Test - Driving 50.8 mm. O.D. Sampler with 63.5 kg. Hammer freely falling 0.76 m.

F.A.P. NO STP-3057 (4)N
SHA CONTRACT NO: BC320-001-815
BALTIMORE CITY CONTRACT NO. TR08310

RUMMEL KLEPPER & KAHL

BORING LOG

Project: Central Avenue | Commission No.: 197-42

Location: Station 15+99.0 17.5 LT | Date: 10/12 - 10/13/99

BORING NO. CA-111
Page 2 of 2
Boring Method HSA
Ground Surface El. 11.71 ft.

BORING METHOD
HSA - Hollow Stem Augers
SSA - Solid Stem Augers
DC - Driving Casing
MD - Mud Drilling

SAMPLER TYPE
DS - Driven Split Barrel Sampler
PT - Pressed Shelby Tube
D- Denison
RC - Rock Core Barrel

GROUND WATER DEPTH
At Completion 7.3 ft.
Caved Depth 14.9 ft.
After 24 Hrs. 7.5 ft.
Caved Depth 12.6 ft.

STRATA DEPTH ft.	SAMPLE DEPTH	SAMPLE NO.	BLOWS ft.		TYPE - SIZE	REC/ATT (ft.)	DESCRIPTION (color density, moisture, proportion, etc.)
	35.0	14	44	100/5	DS	8/18	Silty Sand and Gravel, Wet, Light - Dark Brown
	39.5	15		28	DS	12/18	
41.0	41.0		44	96			EL. -29.29
							Bottom of Boring @ 41.0'

Standard Penetration Test - Driving 50.8 mm. O.D. Sampler with 63.5 kg. Hammer freely falling 0.76 m.

F.A.P. NO STP-3057 (4)N
SHA CONTRACT NO: BC320-001-815
BALTIMORE CITY CONTRACT NO. TR08310

RUMMEL KLEPPER & KAHL

BORING LOG

Project: Central Avenue

Commission No.: 197-42

Location: 38+15.7 13.5 RT

Date: 10/13 - 10/14/99

BORING NO. CA-112A
Page 1 of 1
Boring Method HSA
Ground Surface El. 32.23 ft.

BORING METHOD
HSA - Hollow Stem Augers
SSA - Solid Stem Augers
DC - Driving Casing
MD - Mud Drilling

SAMPLER TYPE
DS - Driven Split Barrel Sampler
PT - Pressed Shelby Tube
D- Denison
RC - Rock Core Barrel

GROUND WATER DEPTH
At Completion DRY ft.
Caved Depth _____ft.
After _____ Hrs. _____ft.
Caved Depth _____ft.

STRATA DEPTH ft.	SAMPLE DEPTH	SAMPLE NO.	BLOWS ft.	TYPE - SIZE	REC/ATT (ft.)	DESCRIPTION (color density, moisture, proportion, etc.)
1.5						18" Portland Concrete Cement EL. 30.73
	1.5					Crushed Stone, Sand, Brown Fragments, Fill
3.5						Refusal on Concrete @ 3.5' EL. 28.73
	3.5					Bottom of Boring @ 3.5'
						Boring Backfilled

Standard Penetration Test - Driving 50.8 mm. O.D. Sampler with 63.5 kg. Hammer freely falling 0.76 m.

F.A.P. NO STP-3057 (4)N
SHA CONTRACT NO: BC320-001-815
BALTIMORE CITY CONTRACT NO. TR08310

RUMMEL KLEPPER & KAHL

BORING LOG

Project: Central Avenue — Commission No.: 197-42

Location: 38+48.7 9.3 RT — Date: 10/22 - 10/23/99

BORING NO. CA-112
Page 1 of 2
Boring Method HSA
Ground Surface El. 32.71 ft.

BORING METHOD
HSA - Hollow Stem Augers
SSA - Solid Stem Augers
DC - Driving Casing
MD - Mud Drilling

SAMPLER TYPE
DS - Driven Split Barrel Sampler
PT - Pressed Shelby Tube
D- Denison
RC - Rock Core Barrel

GROUND WATER DEPTH
At Completion 14.4 ft.
Caved Depth 15.7 ft.
After * Hrs. * ft.
Caved Depth * ft.

STRATA DEPTH ft.	SAMPLE DEPTH	SAMPLE NO.	BLOWS ft.		TYPE - SIZE	REC/ATT (ft.)	DESCRIPTION (color density, moisture, proportion, etc.)
0.0	0.6						2" Bituminous Concrete 6" Cobblestones EL. 32.11
	2.5	1		5	DS	10/18	Mixture of Sand, Clay, Gravel, Stone Fragments, Coal, Brick, Moist to Wet, Black, Brown, Red (Fill)
			5	5			
	5.0	2	2	3	DS	12/18	
			3				
	7.5	3		5	DS	8/18	
			3	4			
10.0							EL. 22.71
	10.0	4	12	16	DS	3/18	Medium - Coarse Sand and Small to Large Gravel, Trace Clay, Moist, Medium - Dark Brown
			10				
	12.5	5		15	DS	14/18	
			21	10			
							Water on Rods @ 14.0'
	15.0	6	28	62	DS	14/18	
			56				
	17.5	7		20	DS	16/18	
			21	24			Wet @ 17.5' - 34.0'
	20.0	8	15	20	DS	10/18	
			26				
	23.5	9		12	DS	14/18	Running Sand @ 23.5' - 34.0'
			14	17			
	28.5	10		22	DS	4/18	
			11	13			
34.0							
	33.5	11		5	DS	14/18	EL. -1.29
			6	10			

Standard Penetration Test - Driving 50.8 mm. O.D. Sampler with 63.5 kg. Hammer freely falling 0.76 m.

F.A.P. NO STP-3057 (4)N
SHA CONTRACT NO: BC320-001-815
BALTIMORE CITY CONTRACT NO. TR08310

RUMMEL KLEPPER & KAHL

BORING LOG

Project: Central Avenue Commission No.: 197-42

Location: 38+48.7 9.3 RT Date: 10/22 - 10/23/99

BORING NO. CA-112
Page 2 of 2
Boring Method HSA
Ground Surface El. 32.71 ft.

BORING METHOD
HSA - Hollow Stem Augers
SSA - Solid Stem Augers
DC - Driving Casing
MD - Mud Drilling

SAMPLER TYPE
DS - Driven Split Barrel Sampler
PT - Pressed Shelby Tube
D- Denison
RC - Rock Core Barrel

GROUND WATER DEPTH
At Completion 14.4 ft.
Caved Depth 15.7 ft.
After * Hrs. * ft.
Caved Depth * ft.

STRATA DEPTH ft.	SAMPLE DEPTH	SAMPLE NO.	BLOWS ft.		TYPE - SIZE	REC/ATT (ft.)	DESCRIPTION (color density, moisture, proportion, etc.)
							Clayey Silt with Trace - Little Coarse Sand, Moist, Light Gray, Medium Brown (Residual Soil)
	38.5	12		8	DS	14/18	
40.0			16	27			EL. -7.29
							Bottom of Boring @ 40.0' *Backfilled @ Completion

Standard Penetration Test - Driving 50.8 mm. O.D. Sampler with 63.5 kg. Hammer freely falling 0.76 m.

F.A.P. NO STP-3057 (4)N
SHA CONTRACT NO: BC320-001-815
BALTIMORE CITY CONTRACT NO. TR08310

RUMMEL KLEPPER & KAHL

BORING LOG

Project: Central Avenue Commission No.: 197-42

Location: Station 26+45.0 71.9 LT Date: 10/18/99

BORING NO. CA-113
Page 1 of 2
Boring Method HSA
Ground Surface El. 17.69 ft.

BORING METHOD
HSA - Hollow Stem Augers
SSA - Solid Stem Augers
DC - Driving Casing
MD - Mud Drilling

SAMPLER TYPE
DS - Driven Split Barrel Sampler
PT - Pressed Shelby Tube
D- Denison
RC - Rock Core Barrel

GROUND WATER DEPTH
At Completion 13.5 ft.
Caved Depth 29.6 ft.
After * Hrs. * ft.
Caved Depth * ft.

STRATA DEPTH ft.	SAMPLE DEPTH	SAMPLE NO.	BLOWS ft.		TYPE - SIZE	REC/ATT (ft.)	DESCRIPTION (color density, moisture, proportion, etc.)
0.0	0.95						11.5" Bituminous Concrete Crushed Stone EL. 16.74
	3.5	1		5	DS	12/18	Clayey Silt, Moist, Mottled, Dark Gray, Dark Brown
			7	8			
8.5							EL. 1.19
	8.5	2		4	DS	12/18	
			5	5			Silt, Trace Fine Sand, Mica, Moist - Wet, Dark Gray and Dark Brown Wet @ 9.5'
13.5							EL. 4.19
	13.5	3		3	DS	18/18	
			3	4			Clay, Trace Silt, Moist, Dark Gray, Dark Brown
19.0	18.5	4		3	DS	18/18	EL. -1.31
			3	5			Micaceous Silt, Trace Fine Sand, Clay, Wood Fragments, Organic Odor, Moist, Dark Gray, Black
	23.5	5		3	DS	18/18	
			4	4			
29.0	28.5	6		1/12	DS	18/18	Silty Clay @ 28.5' - 29.5' with Wood Fragments EL. -11.31
			8				
34.5	33.5	7		8	DS	18/18	Silty Sand and Gravel, Wet, Dark Brown EL. -16.81
			11	12			

Standard Penetration Test - Driving 50.8 mm. O.D. Sampler with 63.5 kg. Hammer freely falling 0.76 m.

F.A.P. NO STP-3057 (4)N
SHA CONTRACT NO: BC320-001-815
BALTIMORE CITY CONTRACT NO. TR08310

RUMMEL KLEPPER & KAHL

BORING LOG

Project: Central Avenue Commission No.: 197-42

Location: Station 26+45.0 71.9 LT Date: 10/18/99

BORING NO. CA-113
Page 2 of 2
Boring Method HSA
Ground Surface El. 17.69 ft.

BORING METHOD
HSA - Hollow Stem Augers
SSA - Solid Stem Augers
DC - Driving Casing
MD - Mud Drilling

SAMPLER TYPE
DS - Driven Split Barrel Sampler
PT - Pressed Shelby Tube
D- Denison
RC - Rock Core Barrel

GROUND WATER DEPTH
At Completion 13.5 ft.
Caved Depth 29.6 ft.
After * Hrs. * ft.
Caved Depth * ft.

STRATA DEPTH ft.	SAMPLE DEPTH	SAMPLE NO.	BLOWS ft.		TYPE - SIZE	REC/ATT (ft.)	DESCRIPTION (color density, moisture, proportion, etc.)
							Mica Silt, Trace Sand, Damp, Light Gray, Dark Brown (Residual Soil)
39.0	38.5	8	86		DS	6/18	EL. -21.31
	39.0						Bottom of Boring @ 39.0' Backfilled @ Completion

Standard Penetration Test - Driving 50.8 mm. O.D. Sampler with 63.5 kg. Hammer freely falling 0.76 m.

F.A.P. NO STP-3057 (4)N
SHA CONTRACT NO: BC320-001-815
BALTIMORE CITY CONTRACT NO. TR08310

RUMMEL KLEPPER & KAHL

BORING LOG

Project: Central Avenue — Commission No.: 197-42

Location: 26+57.0 78.1 RT — Date: 10/14 to 10/15/99

BORING NO. CA-114
Page 1 of 2
Boring Method HSA
Ground Surface El. 17.23 ft.

BORING METHOD
HSA - Hollow Stem Augers
SSA - Solid Stem Augers
DC - Driving Casing
MD - Mud Drilling

SAMPLER TYPE
DS - Driven Split Barrel Sampler
PT - Pressed Shelby Tube
D- Denison
RC - Rock Core Barrel

GROUND WATER DEPTH
At Completion 11.5 ft.
Caved Depth 15.6 ft.
After 22 Hrs. 10.8 ft.
Caved Depth 13.4 ft.

STRATA DEPTH ft.	SAMPLE DEPTH	SAMPLE NO.	BLOWS ft.		TYPE - SIZE	REC/ATT (ft.)	DESCRIPTION (color density, moisture, proportion, etc.)
0.0	0.8						5" Bituminous Concrete
							5" Crushed Stone EL. 16.43
	2.5	1		4	DS	10/18	Mixture of Clay, Sand, Stone Fragments,
			2	2			Moist, Dark Gray (Fill)
5.0							EL. 12.23
	5.0	2	2	1	DS	12/18	Clayey Fine - Medium Sand, Moist, Dark
7.5			1				Gray EL. 9.73
	7.5	3		2	DS	10/18	
			3	4			Medium Sand, Trace - Little Clay, and Silt,
10.0							Moist, Dark Brown and Gray EL. 7.23
	10.0	4	2	3	DS	18/18	Silt, Trace Fine Sand and Mica, Moist,
			3				Dark Gray and Dark Brown
	12.5	5		4	DS	18/18	
			3	3			
15.0							Water @ 14.0' During Drilling EL. 2.23
	15.0	6	3	5	DS	18/18	
			6				Silty Sand, Wet, Dark Gray
	17.5	7		1	DS	18/18	
			1	1			
							Wood Fragments @ 19.5'
	20.0	8	1	2	DS	16/18	Running Sand 2.0'- 4.0' Throughout This
			2				Material
	22.5	9		2	DS	16/18	
			3	3			
	25.0	10	2	1	DS	18/18	
			1				
	27.5	11		1	DS	18/18	
			4	6			
30.5							EL. -13.27
	30.0	12	5	8	DS	12/18	
			8				Silty Sand and Gravel, Wet, Medium
							Brown

Standard Penetration Test - Driving 50.8 mm. O.D. Sampler with 63.5 kg. Hammer freely falling 0.76 m.

F.A.P. NO STP-3057 (4)N
SHA CONTRACT NO: BC320-001-815
BALTIMORE CITY CONTRACT NO. TR08310

RUMMEL KLEPPER & KAHL

BORING LOG

Project: Central Avenue Commission No.: 197-42

Location: Station 26+37.0 78.1 RT Date: 10/14 to 10/15/99

BORING NO. CA-114
Page 2 of 2
Boring Method HSA
Ground Surface El. 17.23 ft.

BORING METHOD
HSA - Hollow Stem Augers
SSA - Solid Stem Augers
DC - Driving Casing
MD - Mud Drilling

SAMPLER TYPE
DS - Driven Split Barrel Sampler
PT - Pressed Shelby Tube
D- Denison
RC - Rock Core Barrel

GROUND WATER DEPTH
At Completion 11.5 ft.
Caved Depth 15.6 ft.
After 22 Hrs. 10.8 ft.
Caved Depth 13.4 ft.

STRATA DEPTH ft.	SAMPLE DEPTH	SAMPLE NO.	BLOWS ft.		TYPE - SIZE	REC/ATT (ft.)	DESCRIPTION (color density, moisture, proportion, etc.)
36.5	35.0	13	10	23	DS	14/18	EL. -19.27
	36.5		32				
							Bottom of Boring @ 36.5'

Standard Penetration Test - Driving 50.8 mm. O.D. Sampler with 63.5 kg. Hammer freely falling 0.76 m.

F.A.P. NO STP-3057 (4)N
SHA CONTRACT NO: BC320-001-815
BALTIMORE CITY CONTRACT NO. TR08310

RUMMEL KLEPPER & KAHL

BORING LOG

Project: Central Avenue - North Commission No.: 197-42

Location: Station 43+85 17.0' RT Date: 01/11 - 01/12/00

BORING NO. CA-115
Page 1 of 1
Boring Method HSA
Ground Surface El. 33.0 ft.

BORING METHOD
HSA - Hollow Stem Augers
SSA - Solid Stem Augers
DC - Driving Casing
MD - Mud Drilling

SAMPLER TYPE
DS - Driven Split Barrel Sampler
PT - Pressed Shelby Tube
D- Denison
RC - Rock Core Barrel

GROUND WATER DEPTH
At Completion 7.3 ft.
Caved Depth 10.1 ft.
After * Hrs. * ft.
Caved Depth * ft.

STRATA DEPTH ft.	SAMPLE DEPTH	SAMPLE NO.	BLOWS ft.		TYPE - SIZE	REC/ATT (ft.)	DESCRIPTION (color density, moisture, proportion, etc.)
							5 inches Cobblestones
							Mixtures of Silty Sand and Sand, with Stone
	3.0	1	3	3	DS	12/18	and Brick Fragments, Trales of Silt and
			3				Clay, Medium to Dark Brown
							Pockets of Wet Sand
	6.0	2	2	2	DS	12/18	(Fill)
			6				
	9.0	3	2	3	DS	4/18	
			6				
12.5	12.0	4	7	24	DS	14/18	
			49				Sand and Gravel, Angular Gravel Fragments,
15.0							Trace Silt, Medium Brown, Wet @ 13.0'
	15.0	5	5	10	DS	15/19	Medium Sand, Trace Silt and Small Gravel
			15				@ 18.0 - 19.5', Medium Brown, Tan and
							White, Wet
	18.0	6	10	16	DS	18/18	Running Sand @ 15.0' - 21.0'
			16				1' - 3' in Augers
21.0							
	21.0	7	23	42	DS	18/18	Silty Sand and Round/Angular Small to
			39				Large Gravel. Medium - Dark Brown
							Running Sand and Gravel up to 6.0' in
	24.0	8	16	11	DS	16/18	Augers
			22				
	27.0	9	33	50	DS	18/18	
			28				
30.5	30.0	10	19	22	DS	18/18	
31.5			50				Sandy Silt, Trace Clay, Damp, White, Light
							Gray, Residual Soil
							Bottom of Boring @ 31.5'
							*Backfilled @ Completion

Standard Penetration Test - Driving 50.8 mm. O.D. Sampler with 63.5 kg. Hammer freely falling 0.76 m.

F.A.P. NO STP-3057 (4)N
SHA CONTRACT NO: BC320-001-815
BALTIMORE CITY CONTRACT NO. TR08310

RUMMEL KLEPPER & KAHL

BORING LOG

Project: Centrl Avenue - North Commission No.: 197-42

Location: Station 46+62 9.0' RT Date: 01/11 - 01/12/00

BORING NO. CA-116
Page 1 of 1
Boring Method HSA
Ground Surface El. 34.0 ft.

BORING METHOD
HSA - Hollow Stem Augers
SSA - Solid Stem Augers
DC - Driving Casing
MD - Mud Drilling

SAMPLER TYPE
DS - Driven Split Barrel Sampler
PT - Pressed Shelby Tube
D- Denison
RC - Rock Core Barrel

GROUND WATER DEPTH
At Completion 5.5 ft.
Caved Depth 14.0 ft.
After * Hrs. * ft.
Caved Depth * ft.

STRATA DEPTH ft.	SAMPLE DEPTH	SAMPLE NO.	BLOWS ft.		TYPE - SIZE	REC/ATT (ft.)	DESCRIPTION (color density, moisture, proportion, etc.)
							1 inch Bituminous Concrete
							2 inches Crushed Stone
							6 inches Concrete
	3.0	1	3	4	DS	8/18	
			4				Mixture of Sand, Stone, Brick Fragments,
							Tile Fragments, Trace Silt, Gravel, Damp
	6.0	2	5	3	DS	2/18	to Moist, Few Wet Zones, Dark Brown
			4				(Fill)
	9.0	3	10	11	DS	6/18	
			9				
12.0	12.0	4	17	21	DS	5/18	
			21				Silty Sand and Small to Medium Gravel,
							Wet, Trace Clay, Light Gray
	15.0	5	34	46	DS	14/18	Running Sand and Gravel @ 12.0' - 25.5'
			49				Up To 6' of Granular Soil in Augers @ 24.0'
	18.0	6	28	50/5	DS	12/18	
	21.0	7	48	50/5	DS	8/18	
	24.0	8	18	32	DS	18/18	
25.5	25.5		32				
							Bottom of Boring @ 25.5'
							*Backfilled @ Completion
							Could Not Keep Running Sand and Gravel
							Out of Augers. Will Switch to Mud Drilling

F.A.P. NO STP-3057 (4)N
SHA CONTRACT NO: BC320-001-815
BALTIMORE CITY CONTRACT NO. TR08310

Standard Penetration Test - Driving 50.8 mm. O.D. Sampler with 63.5 kg. Hammer freely falling 0.76 m.

RUMMEL KLEPPER & KAHL

BORING LOG

Project: Central Avenue - North Commission No.: 197-42

Location: Station 48+60 9.0' RT Date: 01/12 - 01/13/00

BORING NO. CA-117
Page 1 of 1
Boring Method MD
Ground Surface El. 34.0 ft.

BORING METHOD
HSA - Hollow Stem Augers
SSA - Solid Stem Augers
DC - Driving Casing
MD - Mud Drilling

SAMPLER TYPE
DS - Driven Split Barrel Sampler
PT - Pressed Shelby Tube
D- Denison
RC - Rock Core Barrel

GROUND WATER DEPTH
At Completion 14.0 ft.
Caved Depth 18.2 ft.
After * Hrs. * ft.
Caved Depth * ft.

STRATA DEPTH ft.	SAMPLE DEPTH	SAMPLE NO.	BLOWS ft.		TYPE - SIZE	REC/ATT (ft.)	DESCRIPTION (color density, moisture, proportion, etc.)
							5 inches Brick
							2 inches Gravel
							6 inches Cobblestones
	3.0	1	2	3	DS	12/18	Silty Clay, Trace - Fine Sand, Moist, Dark Brown
			3				
							(Fill)
6.5	6.0	2	7	6	DS	12/18	
			14				Fine Sand, Trace Silt, Moist, Medium Brown
9.0							
	9.0	3	8	4	DS	10/18	Clayey Sand and Large Gravel, Wet, Dark Brown
			5				
12.0							
	12.0	4	8	17	DS	16/18	Fine Sandy Clay, Trace Medium Gravel, Wet, Dark Brown
			14				
15.0							
	15.0	5	8	8	DS	12/18	Silty Sand and Gravel, Wet, Dark Brown
			6				
18.0							
	18.0	6	10	18	DS	6/18	Silty Clay, Trace - Coarse Sand, Wet, Dark Brown
			14				
21.0							
	21.0	7	6	12	DS	18/18	Interbedded White Silt and Silty Sand with Gravel, Moist - Wet, Light Gray, White
			18				
	24.0	8	18	18	DS	16/18	
25.5	25.5		24				
							Bottom of Boring @ 25.5'
							*Backfilled @ Completion
							Used Straight Bentonite Mud. Encountered Running Sand @ 24.0'

Standard Penetration Test - Driving 50.8 mm. O.D. Sampler with 63.5 kg. Hammer freely falling 0.76 m.

F.A.P. NO STP-3057 (4)N
SHA CONTRACT NO: BC320-001-815
BALTIMORE CITY CONTRACT NO. TR08310

RUMMEL KLEPPER & KAHL

BORING LOG

Project: Central Avenue - North Commission No.: 197-42

Location: Station 50 + 50 6.0' RT Date: 01/14 - 01/15/00

BORING NO. CA-118
Page 1 of 1
Boring Method HSA
Ground Surface El. 34.0 ft.

BORING METHOD
HSA - Hollow Stem Augers
SSA - Solid Stem Augers
DC - Driving Casing
MD - Mud Drilling

SAMPLER TYPE
DS - Driven Split Barrel Sampler
PT - Pressed Shelby Tube
D- Denison
RC - Rock Core Barrel

GROUND WATER DEPTH
At Completion 16.5 ft.
Caved Depth 16.8 ft.
After * Hrs. * ft.
Caved Depth * ft.

STRATA DEPTH ft.	SAMPLE DEPTH	SAMPLE NO.	BLOWS ft.		TYPE - SIZE	REC/ATT (ft.)	DESCRIPTION (color density, moisture, proportion, etc.)
							2 inches Bituminous Concrete
							6 inches Brick
							6 inches Cobblestones
	3.0	1	3	4	DS	5/18	Mixture of Sand, Silt, Stone, Gravel and
			3				Brick Fragments, Damp to Wet, Dark
							Brown
	6.0	2	2	2	DS	5/18	(Fill)
			1				
9.0							
	9.0	3	2	2	DS	10/18	Silty Medium - Coarse Sand, Trace Clay,
			2				Small Gravel Layers, Wet, Dark Brown
12.0							
	12.0	4	4	3	DS	18/18	Interbedded Silty Clay, Trace Sand and
			9				Clayey Medium Sand, Moist, Light Gray
15.0							and Dark Brown
	15.0	5	8	11	DS	4/18	Silty Medium-Coarse Sand and Small to
			13				Large Gravel, Trace Clay, Wet, Light Gray
18.0							
	18.0	6	20	35	DS	16/18	Silty Medium Sand and Small to Medium
			45				Gravel, Wet, Dark Brown and Light Gray
	21.0	7	16	25	DS	16/18	
			31				
	24.0	8	29	34	DS	12/18	
25.5			39				
							Bottom of Boring @ 25.5'
							*Backfilled @ Completion

Standard Penetration Test - Driving 50.8 mm. O.D. Sampler with 63.5 kg. Hammer freely falling 0.76 m.

F.A.P. NO STP-3057 (4)N
SHA CONTRACT NO: BC320-001-815
BALTIMORE CITY CONTRACT NO. TR08310

RUMMEL KLEPPER & KAHL

BORING LOG

Project: Central Avenue - North Commission No.: 197-42

Location: Station 51+26 6.0' LT Date: 01/14 - 01/15/00

BORING NO. CA-119
Page 1 of 1
Boring Method HSA
Ground Surface El. 34.0 ft.

BORING METHOD
HSA - Hollow Stem Augers
SSA - Solid Stem Augers
DC - Driving Casing
MD - Mud Drilling

SAMPLER TYPE
DS - Driven Split Barrel Sampler
PT - Pressed Shelby Tube
D- Denison
RC - Rock Core Barrel

GROUND WATER DEPTH
At Completion 10.0 ft.
Caved Depth 10.4 ft.
After * Hrs. * ft.
Caved Depth * ft.

STRATA DEPTH ft.	SAMPLE DEPTH	SAMPLE NO.	BLOWS ft.		TYPE - SIZE	REC/ATT (ft.)	DESCRIPTION (color density, moisture, proportion, etc.)
							6 inches Bituminous Concrete
							4 inches Crushed Stone
							6 inches Cobblestones
	3.0	1	5	4	DS	10/18	Mixture of Sand, Silt, Clay with Stone
			8				Fragments, Moist (Fill)
	6.0	2	7	17	DS	6/18	Large Gravel @ 6.0' - 7.5'
			25				
9.0							
	9.0	3	24	23	DS	14/18	Silty Medium - Coarse Sand and Small to
			13				Large Angular Gravel, Wet, Dark Brown
	12.0	4	7	18	DS	12/18	Coarse Sand, Small Gravel @ 13.0' - 13.3'
			33				
	15.0	5	12	18	DS	12/18	
			23				
	18.0	6	22	38	DS	14/18	White to Light Gray @ 18.5' - 19.5'
			50				
							Large Gravel @ 21.0' - 21.9'
21.9	21.0	7	32	50/4	DS	8/18	
							Bottom of Boring @ 21.9'
							*Backfilled @ Completion

Standard Penetration Test - Driving 50.8 mm. O.D. Sampler with 63.5 kg. Hammer freely falling 0.76 m.

F.A.P. NO STP-3057 (4)N
SHA CONTRACT NO: BC320-001-815
BALTIMORE CITY CONTRACT NO. TR08310

RUMMEL KLEPPER & KAHL

BORING LOG

Project: Central Avenue - North Commission No.: 197-42

Location: Station 53+30 5.0' RT Date: 01/14 - 01/15/00

BORING NO. CA-120
Page 1 of 1
Boring Method HSA
Ground Surface El. 34.5 ft.

BORING METHOD
HSA - Hollow Stem Augers
SSA - Solid Stem Augers
DC - Driving Casing
MD - Mud Drilling

SAMPLER TYPE
DS - Driven Split Barrel Sampler
PT - Pressed Shelby Tube
D- Denison
RC - Rock Core Barrel

GROUND WATER DEPTH
At Completion 12.4 ft.
Caved Depth 12.8 ft.
After * Hrs. * ft.
Caved Depth * ft.

STRATA DEPTH ft.	SAMPLE DEPTH	SAMPLE NO.	BLOWS ft.		TYPE - SIZE	REC/ATT (ft.)	DESCRIPTION (color density, moisture, proportion, etc.)
							2 inches Bituminous Concrete
							6 inches Brick
							6 inches Cobblestones
	3.0	1	2	3	DS	8/18	
			2				Mixture of Sand and Gravel with Silt and
							Stone, Brick Fragments, Moist, Dark Brown
	6.0	2	20	19	DS	8/18	
			28				
	9.0	3	29	26	DS	2/18	Large Gravel @ 9.0'
			17				
12.0							
	12.0	4	10	13	DS	10/18	Coarse Silty Sand and Medium Gravel, Wet,
			10				Dark Brown
15.0							
	15.0	5	16	22	DS	12/18	Silty, Medium Sand, Trace - Little Gravel,
			27				Wet, Dark Brown
18.0							
	18.0	6	19	21	DS	14/18	Silty Medium Sand and Small to Medium
			23				Gravel, Wet, Dark Brown
	21.0	7	27	27	DS	18/18	4.0' Running Sand at 21.0'
22.5			25				
							Bottom of Boring @ 22.5'
							*Backfilled @ Completion

Standard Penetration Test - Driving 50.8 mm. O.D. Sampler with 63.5 kg. Hammer freely falling 0.76 m.

F.A.P. NO STP-3057 (4)N
SHA CONTRACT NO: BC320-001-815
BALTIMORE CITY CONTRACT NO. TR08310

RUMMEL KLEPPER & KAHL

BORING LOG

Project: Central Avenue - North Commission No.: 197-42

Location: 54+83 7.5' LT Date: 01/24 - 01/25/00

BORING NO. CA-121
Page 1 of 1
Boring Method HSA
Ground Surface El. 36 ft.

BORING METHOD
HSA - Hollow Stem Augers
SSA - Solid Stem Augers
DC - Driving Casing
MD - Mud Drilling

SAMPLER TYPE
DS - Driven Split Barrel Sampler
PT - Pressed Shelby Tube
D- Denison
RC - Rock Core Barrel

GROUND WATER DEPTH
At Completion 11.0 ft.
Caved Depth 13.4 ft.
After * Hrs. * ft.
Caved Depth * ft.

STRATA DEPTH ft.	SAMPLE DEPTH	SAMPLE NO.	BLOWS ft.		TYPE - SIZE	REC/ATT (ft.)	DESCRIPTION (color density, moisture, proportion, etc.)
							1" Bituminous Concrete
							4" Brick
							2" Sand
	3.0	1	3	3	DS	14/18	6" Portland Concrete Cement
			4				Clayey Sand, Trace Brick Fragments and
6.0							Gravel, Wet, Dark Brown (Fill)
	6.0	2	10	15	DS	18/18	Medium Sand, Trace - Little Silt, Damp,
			18				Dark Brown
							Trace Gravel @ 9.3' to 9.5'
	9.0	3	15	14	DS	17/18	Silty Clay Layer @ 10.1' - 10.5'
11.0			10				
	12.0	4	8	11	DS	8/18	Silty Medium to Coarse Sand and Small to
			12				Large Gravel, Wet, Medium Dark Brown
	15.0	5	9	16	DS	10/18	Trace Clay @ 15.0' - 16.5'
			14				Clayey Sand Layer @ 19.0' - 19.5'
	18.0	6	9	11	DS	16/18	
			16				
	21.0	7	10	8	DS	5/18	
			8				
25.0	24.0	8	8	11	DS	18/18	
25.5			11				Silt, Trace Clay, Damp - Moist, Light Gray and Dark Brown Red
							Bottom of Boring @ 25.5'
							*Backfilled @ Completion

Standard Penetration Test - Driving 50.8 mm. O.D. Sampler with 63.5 kg. Hammer freely falling 0.76 m.

F.A.P. NO STP-3057 (4)N
SHA CONTRACT NO: BC320-001-815
BALTIMORE CITY CONTRACT NO. TR08310

RUMMEL KLEPPER & KAHL

BORING LOG

Project: Central Avenue - North

Commission No.: 197-42

Location: 56+65 5.5' RT

Date: 01/24 - 01/25/00

BORING NO. CA-122
Page 1 of 1
Boring Method HSA
Ground Surface El. 38.0 ft.

BORING METHOD
HSA - Hollow Stem Augers
SSA - Solid Stem Augers
DC - Driving Casing
MD - Mud Drilling

SAMPLER TYPE
DS - Driven Split Barrel Sampler
PT - Pressed Shelby Tube
D- Denison
RC - Rock Core Barrel

GROUND WATER DEPTH
At Completion 10.1 ft.
Caved Depth 12.6 ft.
After * Hrs. * ft.
Caved Depth * ft.

STRATA DEPTH ft.	SAMPLE DEPTH	SAMPLE NO.	BLOWS ft.		TYPE - SIZE	REC/ATT (ft.)	DESCRIPTION (color density, moisture, proportion, etc.)
							5" Bituminous Concrete
							5" Brick
							6" Cobblestone
	3.0	1	3	5	DS	12/18	
			8				Silt, Trace - Little Fine Sand, Damp, Dark Gray
6.0							
	6.0	2	11	7	DS	18/18	Silt and Fine - Medium Sand, Large and Medium Gravel, Damp, Light Gray and Brown
			7				
9.0							
	9.0	3	9	4	DS	16/18	Fine - Medium Sandy Silt, Trace Clay, Moist, Light Gray and Brown
			7				
12.0							
	12.0	4	7	12	DS	16/18	Silty Sand and Gravel, Wet, Dark Brown
			15				
	15.0	5	5	7	DS	10/18	
			9				
	18.0	6	10	6	DS	8/18	Running Sand @ 18.0' and 21.0'
			6				
	21.0	7	13	14	DS	8/18	
22.5			7				Bottom of Boring @ 22.5'
							*Backfilled @ Completion

Standard Penetration Test - Driving 50.8 mm. O.D. Sampler with 63.5 kg. Hammer freely falling 0.76 m.

F.A.P. NO STP-3057 (4)N
SHA CONTRACT NO: BC320-001-815
BALTIMORE CITY CONTRACT NO. TR08310

RUMMEL KLEPPER & KAHL

BORING LOG

Project: Central Avenue - North Commission No.: 197-42

Location: 58+32 5.5' LT Date: 01/24 - 01/25/00

BORING NO. CA-123
Page 1 of 1
Boring Method HSA
Ground Surface El. 40.0 ft.

BORING METHOD
HSA - Hollow Stem Augers
SSA - Solid Stem Augers
DC - Driving Casing
MD - Mud Drilling

SAMPLER TYPE
DS - Driven Split Barrel Sampler
PT - Pressed Shelby Tube
D- Denison
RC - Rock Core Barrel

GROUND WATER DEPTH
At Completion 9.0 ft.
Caved Depth 10.0 ft.
After * Hrs. * ft.
Caved Depth * ft.

STRATA DEPTH ft.	SAMPLE DEPTH	SAMPLE NO.	BLOWS ft.		TYPE - SIZE	REC/ATT (ft.)	DESCRIPTION (color density, moisture, proportion, etc.)
							6" Bituminous Concrete
							6" Concrete
	3.0	1	5	11	DS	14/18	Clayey Sand, Trace - Large Gravel, Moist, Dark Gray and Tan (FILL)
			9				
6.0							
	6.0	2	14	14	DS	12/18	Sand and Medium - Large Gravel, Dry - Damp, White and Light Gray
			18				
	9.0	3	12	20	DS	8/18	
			20				
	12.0	4	12	25	DS	0/18	
			26				
15.0							
	15.0	5	7	12	DS	10/18	Silty Sand and Gravel, Small to Large Gravel, Wet
			14				
	18.0	6	12	11	DS	12/18	
			10				
	21.0	7	15	14	DS	12/18	Coarse Sand with Light Gravel @ 24.0' - 25.5'
			10				
	24.5	8	4	10	DS	10/18	
25.5			13				
							Bottom of Boring @ 25.5'
							*Backfilled at Completion

Standard Penetration Test - Driving 50.8 mm. O.D. Sampler with 63.5 kg. Hammer freely falling 0.76 m.

F.A.P. NO STP-3057 (4)N
SHA CONTRACT NO: BC320-001-815
BALTIMORE CITY CONTRACT NO. TR08310

RUMMEL KLEPPER & KAHL

BORING LOG

Project: Central Avenue - North Commission No.: 197-42

Location: Station 47+46 29.0' RT Date: 01/12 - 01/18/00

BORING NO. CA-124
Page 1 of 1
Boring Method MD
Ground Surface El. 32.0 ft.

BORING METHOD
HSA - Hollow Stem Augers
SSA - Solid Stem Augers
DC - Driving Casing
MD - Mud Drilling

SAMPLER TYPE
DS - Driven Split Barrel Sampler
PT - Pressed Shelby Tube
D- Denison
RC - Rock Core Barrel

GROUND WATER DEPTH
At Completion 9.0 ft.
Caved Depth 9.5 ft.
After__ Hrs.___ ft.
Caved Depth __ft.

STRATA DEPTH ft.	SAMPLE DEPTH	SAMPLE NO.	BLOWS ft.		TYPE - SIZE	REC/ATT (ft.)	DESCRIPTION (color density, moisture, proportion, etc.)
							5 inches Bituminous Concrete
							6 inches Cobblestones
	3.0	1	3	3	DS	12/18	Medium Sand, Damp, Trace Stone
			3				Fragments, Dark Brown
							(Fill)
7.1	6.0	2	3	8	DS	12/18	
			9				
							Silty Sand and Gravel, Moist, Medium - Dark
	9.0	3	5	4	DS	10/18	Brown
			7				Wet @ 9.0'
	12.0	4	12	10	DS	10/18	Small - Large Gravel Fragments Throughout
			16				Samples
15.0							
	15.0	5	4	4	DS	10/18	Medium Sand, Trace Silt and Clay, Small
			8				Gravel, Damp - Moist, Light - Medium Gray
18.0							
	18.0	6	9	10	DS	14/18	Fine Sand, Trace Silt, Mica, Clay, Damp,
			14				Light Gray, White
21.0							
	21.0	7	10	19	DS	14/18	Medium to Coarse Sand, Little - Some, Small
			18				to Large Gravel Zones, Moist to Wet, Light
							Gray, White
	24.0	8	10	12	DS	12/18	
			14				
27.0							
	27.0	9	12	16	DS	14/18	Silty Medium - Coarse Sand with Medium to
			18				Large Gravel, Wet, Dark Brown
	30.0	10	10	18	DS	10/18	
32.0			23				Hard Drilling 32.0' - 33.0'
							Silty Clay, Moist, Light and Medium Gray
	33.0	11	21	26	DS	6/18	(Residual Soil)
34.5	34.5		32				

* Backfilled @ Completion Bottom of Boring @ 34.5'

Standard Penetration Test - Driving 50.8 mm. O.D. Sampler with 63.5 kg. Hammer freely falling 0.76 m.

F.A.P. NO STP-3057 (4)N
SHA CONTRACT NO: BC320-001-815
BALTIMORE CITY CONTRACT NO. TR08310

RUMMEL KLEPPER & KAHL

BORING LOG

Project: Central Avenue - North Commission No.: 197-42

Location: Station 47+40 40' LT Date: 01/12 - 01/13/00

BORING NO. CA-125
Page 1 of 1
Boring Method MD
Ground Surface El. 32.0 ft.

BORING METHOD
HSA - Hollow Stem Augers
SSA - Solid Stem Augers
DC - Driving Casing
MD - Mud Drilling

SAMPLER TYPE
DS - Driven Split Barrel Sampler
PT - Pressed Shelby Tube
D- Denison
RC - Rock Core Barrel

GROUND WATER DEPTH
At Completion 7.0 ft.
Caved Depth 7.5 ft.
After * Hrs. * ft.
Caved Depth * ft.

STRATA DEPTH ft.	SAMPLE DEPTH	SAMPLE NO.	BLOWS ft.		TYPE - SIZE	REC/ATT (ft.)	DESCRIPTION (color density, moisture, proportion, etc.)
							12 inches Bituminous Concrete
							Sand, Brick Fragments, Stone Fragments,
	3.0	1	4	1	DS	5/18	Concrete Fragments, Black, Dark Brown
			1				(Fill)
							Abandoned PF&T Conduit @ 3.1' to 4.4'
	6.0	2	4	3	DS	6/18	
8.5			4				
	9.0	3	17	16	DS	10/18	Silty Sand and Medium - Large Gravel, Wet,
			15				Dark Brown
	12.0	4	6	3	DS	6/18	Running Sand and Gravel @ 15.0' Begin
			2				Using Mud
15.0							
	15.0	5	18	30	DS	16/18	Medium Sand, Moist, Light Brown
			39				
18.0							
	18.0	6	10	18	DS	14/18	Fine Sandy Silt, Trace Clay, Moist, Light
			20				Gray
21.0							
	21.0	7	21	31	DS	14/18	Medium Sand, and Small to Coarse Gravel,
			35				Medium - Dark Brown and Light Gray, Wet
	24.0	8	18	32	DS	12/18	Small - Medium Gravel @ 24.0' - 25.5'
			46				
	27.0	9	22	33	DS	14/18	
			36				
							Large Gravel with Sand @ 30.0' - 31.5'
31.0	30.0	10	30	50/6	DS	5/18	Running Sand @ 31.5'
							Bottom of Boring @ 31.0'
							*Backfilled @ Completion

Standard Penetration Test - Driving 50.8 mm. O.D. Sampler with 63.5 kg. Hammer freely falling 0.76 m.

F.A.P. NO STP-3057 (4)N
SHA CONTRACT NO: BC320-001-815
BALTIMORE CITY CONTRACT NO. TR08310

RUMMEL KLEPPER & KAHL

BORING LOG

Project: Central Avenue

Commission No.: 197-42

Location: Station 49+60 10' RT

Date: 02/22/00

BORING NO. CA-126
Page 1 of 1
Boring Metho HSA
Ground Surface El. 34.4 ft.

BORING METHOD
HSA - Hollow Stem Augers
SSA - Solid Stem Augers
DC - Driving Casing
MD - Mud Drilling

SAMPLER TYPE
DS - Driven Split Barrel Sampler
PT - Pressed Shelby Tube
D- Denison
RC - Rock Core Barrel

GROUND WATER DEPTH
At Completion 12.5 ft.
Caved Depth 13 ft.
After * Hrs. * ft.
Caved Depth * ft.

STRATA DEPTH ft.	SAMPLE DEPTH	SAMPLE NO.	BLOWS ft.		TYPE - SIZE	REC/ATT (ft.)	DESCRIPTION (color density, moisture, proportion, etc.)
							5" Asphalt 6" Concrete
3.0							
4.0	3.0	1	3 4	3	DS	18/18	Silty Sand, Dry, Yellowish-Tan
7.0	6.0	2	12 26	17	DS	18/18	Silty Sand, Some Gravel, Damp, Dark Brown, Organic Smell
9.0	9.0	3	5 5	5	DS	18/18	Coarse Sand and Gravel, Some Quartz Fragments, Trace Silt and Clay, Damp, Tan To Brown
12.0	12.0	4	9 16	18	DS	7/18	Clayey Silt, Interbedded Layers of Fine Sand, Moist, Tannish - Brown Silty Coarse Sand and Quartz Fragments, Trace Clay, Moist to Wet, Medium Brown
15.0	15.0	5	10 15	21	DS	6/18	Coarse Sand and Gravel, Some Clay and Quartz Fragments, Wet, Yellowish-Brown. Began Using Mud @ This Sample
18.0	18.0	6	12 37	26	DS	18/18	Coarse Sand and Gravel, Some Quartz Fragments, Wet, Yellowish-Tan
	21.0	7	16 42	31	DS	12/18	
	24.0	8	36 53	60	DS	18/18	
27.0	27.0	9	28 64	45	DS	18/18	Silty Fine Sand, Trace Clay, Wet, Tannish-Gray Bottom of Boring @ 28.5'

Standard Penetration Test - Driving 50.8 mm. O.D.

Sampler with 63.5 kg. Hammer freely falling 0.76 m.

F.A.P. NO STP-3057 (4)N
SHA CONTRACT NO: BC320-001-815
BALTIMORE CITY CONTRACT NO. TR08310

RUMMEL KLEPPER & KAHL

BORING LOG

Project: Central Avenue Commission No.: 197-42

Location: Station 48+00 12' RT Date: 02/22/00

BORING NO. CA-127
Page 1 of 1
Boring Method HSA
Ground Surface El. 34.2 ft.

BORING METHOD
HSA - Hollow Stem Augers
SSA - Solid Stem Augers
DC - Driving Casing
MD - Mud Drilling

SAMPLER TYPE
DS - Driven Split Barrel Sampler
PT - Pressed Shelby Tube
D- Denison
RC - Rock Core Barrel

GROUND WATER DEPTH
At Completion Dry ft.
Caved Depth 9.0 ft.
After * Hrs. * ft.
Caved Depth * ft.

STRATA DEPTH ft.	SAMPLE DEPTH	SAMPLE NO.	BLOWS ft.		TYPE - SIZE	REC/ATT (ft.)	DESCRIPTION (color density, moisture, proportion, etc.)
							5" Asphalt 5" Concrete
	3.0	1	9 30	15	DS	14/18	Fine to Medium Sand, Some Gravel, Trace Asphalt Fragments, Dry to Damp, Brownish-Tan
	6.0	2	24 42	42	DS	18/18	
	9.0	3	10 8	2	DS	13/18	
	12.0	4	8 7	9	DS	12/18	
15.5							
	15.0	5	7 10	6	DS	18/18	Medium - Coarse Sand, Wet, Gray and Tan Began Using Mud @ Water Level 15.5' Depth
	18.0	6	8 19	15	DS	18/18	
21.0							
	21.0	7	15 42	24	DS	18/18	Coarse Sand, Wet, Gray
24.0							
25.0	24.0	8	15 18	14	DS	16/18	Coarse Sand and Gravel, Some Quartz Fragments, Wet, Brownish-Yellow Coarse Sand and Gravel, Wet, Light Tan - Brown - Gray
28.25	27.0	9	22 3	10	DS	18/18	
31.0	30.0	10	11 100/3"	27	DS	18/18	Silty Clay, Dry, Tan - Gray
							Silty, Medium - Fine Sand, Minor Clay, Dry, Red - Tan - Yellow - Brown (Residual Soil) Bottom of Boring @ 31.25'

Standard Penetration Test - Driving 50.8 mm. O.D. Sampler with 63.5 kg. Hammer freely falling 0.76 m.

F.A.P. NO STP-3057 (4)N
SHA CONTRACT NO: BC320-001-815
BALTIMORE CITY CONTRACT NO. TR08310

RUMMEL KLEPPER & KAHL

BORING LOG

Project: Central Avenue Commission No.: 197-42

Location: Station 1+03, 34' Rt. Date: 01/31/01

BORING NO. AA-1
Page 1 of 3
Boring Method HSA
Ground Surface El. +/-6.0 ft.

BORING METHOD
HSA - Hollow Stem Augers
SSA - Solid Stem Augers
DC - Driving Casing
MD - Mud Drilling

SAMPLER TYPE
DS - Driven Split Barrel Sampler
PT - Pressed Shelby Tube
D- Denison
RC - Rock Core Barrel

GROUND WATER DEPTH
At Completion 7.0 ft.
Caved Depth ____ ft.
After * Hrs. * ft.
Caved Depth * ft.

STRATA DEPTH ft.	SAMPLE DEPTH	SAMPLE NO.	BLOWS ft.		TYPE - SIZE	REC/ATT (ft.)	DESCRIPTION (color density, moisture, proportion, etc.)
							12" Bituminous Concrete
1.8							8" - 10" Air Space Between Bituminous Concrete and Soil EL. +/- 4.2
	3.5	1		7	DS	3/18	
			3	2			Sand, Little Gravel, Trace Silt, Damp, Reddish-Brown (Possible Fill) EL. +/- -2.5
8.5	8.5	2		3	DS	13/18	
			1	1			Silty Fine Sand, Trace Clay to Clayey Silt, Little Fine Sand, Wet, Brownish-Black EL. +/- -6.5
	10.0	3	2	1	DS	18/18	
			1				
12.5	12.5	4		WOH/6	DS	18/18	
			2	1			Fine Sandy Silt, Little Clay, Wet, Brownish-Black EL. +/- -9.0
15.0							
	15.0	5	2	1	DS	18/18	
			1				Clayey Silt, Trace Fine Sand, Damp, Brownish-Black Wood Remnants at 18.0' and 18.5' EL. +/- -14.5
	17.5	6		2	DS	18/18	
			2	2			
20.5	20.0	7	3	4	DS	12/18	
			5				Silt, Little Clay, Damp to Wet, Greenish-Gray EL. +/- -19.5
25.5	25.0	8	12	13	DS	15/18	
			11				Gravelly Sand, Wet, Orangish-Brown EL. +/- - 24.0
30.0							
	30.0	9	12	11	DS	18/18	Fine Sandy Silt, Micaceous, Damp, Grayish-White and Orange (Residual Soil)
			14				
35.0							EL. +/- -29.0

Standard Penetration Test - Driving 2" O.D. Sampler with 140 LB Hammer freely falling 30".

F.A.P. NO STP-3057 (4)N
SHA CONTRACT NO: BC320-001-815
BALTIMORE CITY CONTRACT NO. TR08310

RUMMEL KLEPPER & KAHL

BORING LOG

Project: Central Avenue Commission No.: 197-42

Location: Station 1+03, 34' Rt. Date: 01/31/01

BORING NO. AA-1
Page 2 of 3
Boring Method HSA
Ground Surface El. +/-6.0 ft.

BORING METHOD
HSA - Hollow Stem Augers
SSA - Solid Stem Augers
DC - Driving Casing
MD - Mud Drilling

SAMPLER TYPE
DS - Driven Split Barrel Sampler
PT - Pressed Shelby Tube
D- Denison
RC - Rock Core Barrel

GROUND WATER DEPTH
At Completion 7.0 ft.
Caved Depth____ ft.
After __*__ Hrs. __*__ ft.
Caved Depth __*__ ft.

STRATA DEPTH ft.	SAMPLE DEPTH	SAMPLE NO.	BLOWS ft.			TYPE - SIZE	REC/ATT (ft.)	DESCRIPTION (color density, moisture, proportion, etc.)
	35.0	10	13	24		DS	18/18	Silty Fine Sand, Micaceous, Damp, Grayish-White and Orange (Residual Soil)
			34					
40.0								EL. +/- -34.0
	40.0	11	28	50/5		DS	11/11	Fine Sandy Silt, Micaceous, Wet, Orange, Red, and Grayish-White (Residual Soil)
45.0								EL. +/- -39.0
	45.0	12	8	31		DS	18/18	Fine Sandy Silt, Some Mica, Little Gravel, Dry, Grayish-White and Orange (Residual Soil)
			33					
51.0	50.0	13	16	21		DS	18/18	EL. +/- -45.0
			36					Fine Sandy Silt, Little Gravel, Trace to Some Mica, Dry, Orangish-Brown (Residual Soil)
	55.0	14	24	39		DS	16/18	
			46					
60.0								EL. +/- -54.0
	60.0	15	8	13		DS	18/18	Mica and Sine Sandy Silt, Trace Clay, Dry, Orange, White, and Black (Residual Soil)
			21					
65.0								EL. +/- -59.0
	65.0	16	14	31		DS	18/18	Mica and Silty Sand, Little Fine Gravel, Dry, White, Gray, and Black (Residual Soil)
			48					
70.0								EL. +/- -64.0

Standard Penetration Test - Driving 2" O.D. Sampler with 140 LB Hammer freely falling 30".

F.A.P. NO STP-3057 (4)N
SHA CONTRACT NO: BC320-001-815
BALTIMORE CITY CONTRACT NO. TR08310

RUMMEL KLEPPER & KAHL

BORING LOG

Project: Central Avenue Commission No.: 197-42

Location: Station 1+03, 34' Rt. Date: 01/31/01

BORING NO. AA-1
Page 3 of 3
Boring Method HSA
Ground Surface El. +/-6.0 ft.

BORING METHOD
HSA - Hollow Stem Augers
SSA - Solid Stem Augers
DC - Driving Casing
MD - Mud Drilling

SAMPLER TYPE
DS - Driven Split Barrel Sampler
PT - Pressed Shelby Tube
D- Denison
RC - Rock Core Barrel

GROUND WATER DEPTH
At Completion 7.0 ft.
Caved Depth ____ ft.
After * Hrs. * ft.
Caved Depth * ft.

STRATA DEPTH ft.	SAMPLE DEPTH	SAMPLE NO.	BLOWS ft.		TYPE - SIZE	REC/ATT (ft.)	DESCRIPTION (color density, moisture, proportion, etc.)
70.33	70.0	17	100/4		DS	4/4	Mica and Silty Sand, Little Fine Gravel, Dry, Greenish-Gray and Black (Residual Soil) EL. +/- -64.33
							Bottom of Boring @ 70.33'
							* Hole Backfilled @ Completion

Standard Penetration Test - Driving 2" O.D.
Sampler with 140 LB Hammer freely falling 30".

F.A.P. NO STP-3057 (4)N
SHA CONTRACT NO: BC320-001-815
BALTIMORE CITY CONTRACT NO. TR08310

FINDLING, INC.

Subject: Results of Coring in Roadway
Streets: Central Avenue from Baltimore Street to Madison Street
Baltimore, MD
Account No.: 9950-508-373-20-663
Boring Contract: TR06033R

Findling Proj. 07-1054- 24
KCI Proj No. 01070426
By: D.F.
Date: 4/25/09 & 5/02/09

Core No.	Location See Attached, 6 pages of Drawings and 6 pages of Photos	*Asphaltic* Concrete (Inches)	*Brick* (Inches)	Sand*	*Cement* Concrete (Inches)
PC-1	Central Ave. 92.9 ft North of Baltimore St Northbound	10 1/2	0	0	0
PC-2	Central Ave. 108.6 ft South of Fayette St. Southbound	2 7/8	3 7/8	2 1/8	6 3/8
PC-3	Central Ave. 93 ft North of Fayette St. Northbound	4	0	0	10
PC-4	Central Ave. 445.5 ft South of Orleans St. Southbound	3 3/8	3 5/8	3 1/2	6
PC-5	Central Ave. 244.3 ft South of Orleans St. Northbound	5	0	0	7
PC-6	Central Ave. 40 ft South of Orleans St. Southbound	4 1/8	2 7/8	2 3/8	5 7/8
PC-7	Central Ave. 79.5 ft North of Orleans St. Northbound	4.25	0	0	7 5/8
PC-8	Central Ave. 355 ft North of Orleans St. Southbound	3 3/4	3 3/4	1 1/2	7 3/4
PC-9	Central Ave. 514.5 ft South of Monument St. Northbound **	4 3/8	0	0	9 5/8
	** 3 inches of Grout - Did not go thru grout. (WRA consultant terminated core.)				
PC-10	Central Ave. 145.5 ft South of Monument St Southbound	2 3/4	3 3/4	1 1/2	7
PC-11	Central Ave. 56.3 ft North of Monument St. Northbound	2 1/4	3 1/4	0	8 3/4
PC-12	Central Ave. 39 ft South of Madison St. Southbound.	3 1/2	0	0	5 1/2
	NOTE: The Brick is Harder than the Cement Concrete				
	* The layer of sand between Brick and Concrete was not recovered				
	Findling will keep these core samples for 30 days; unless other instructions are received they will be destroyed.				

F.A.P. NO STP-3057 (4)N
SHA CONTRACT NO: BC320-001-815
BALTIMORE CITY CONTRACT NO. TR08310

TEST HOLE RESULTS

INCLUDED IN THIS SECTION ARE TEST HOLE RESULTS PERFORMED FOR THIS PROJECT.

ACCURATE LOCATING inc.
1327 Ashton Road • Suite 101 • Hanover, MD 21076
(410) 850-0280 • Fax (410) 850-4167

TEST HOLE INVENTORY

F.A.P. NO STP-3057 (4)N
SHA CONTRACT NO: BC320-001-815
BALTIMORE CITY CONTRACT NO. TR08310

PROJECT: CENTRAL AVENUE STORM DRAIN CULVERT
CLIENT: RUMMEL, KLEPPER & KAHL, LLP

PROJECT MANAGER: MIKE BRENNAN
PROJECT NO.: 2000013

CLIENT JOB NO.: 197-42

DATE: 1-31-00

TH#	TYPE OF UTILITY	COVER	GRADE ELEV.	REMARKS
214	LAND BRIDGE	2.15 / 4.14		SEE TH FORM
215	10" WATER	3.23		" " "
216	10" WATER	2.74		" " "
217	16" WATER	3.99		" " "
218	10" WATER	3.12		" " "
219	42" SANITARY FORCE MAIN	9.39		" " "
220	10" WATER	2.29		" " "
221	40" WATER	3.26		" " "
222	4" GAS	2.77		" " "
223	TELE DUCT	2.32 / 3.12		" " "
224	6" STEAM & 3" RETURN	3.49		" " "
225	6" STEAM & 3" RETURN	7.50		" " "
226	6" STEAM & 3" RETURN	4.95		" " "
227	12" STEAM	4.15		" " "
228	TEST HOLE ATTEMPT			" " "
230	6" STEAM	8.29		" " "
231	16" WATER	3.44		" " "
TP201	STORM DRAIN CULVERT	9.00		BOTTOM COVER ONLY
TP204	STORM DRAIN CULVERT	1.51 / 9.23		SEE TH FORM
TP205	STORM DRAIN CULVERT	2.19 / 12.01		" " "
TP206	STORM DRAIN CULVERT	2.62 / 12.53		" " "
TP208	STORM DRAIN CULVERT	3.24 / 12.63		" " "
TP209	STORM DRAIN CULVERT	2.36 / 12.32		" " "
TP211	STORM DRAIN CULVERT	4.34 / 7.89		" " "
TP212	STORM DRAIN CULVERT	5.17 / 9.72		" " "

APPENDIX A

TEST HOLE DATA

ACCURATE LOCATING inc.

INV.: 2000015 VACUUM TEST HOLE REPORT NO.: 214

PROJECT NAME:	CENTRAL AVENUE STORM DRAIN CULVERT	CLIENT JOB#	197-42 WORK ORDER #
LOCATE REQUESTED BY:	RUMMEL, KLEPPER & KAHL, LLP	PROJECT LOCATION:	BALTIMORE CITY, MARYLAND
UTILITY REQUESTED:	TELEPHONE	SHEET 1 OF 10	PROPOSED: UTILITY WORK
UTILITY FOUND:	SEE NOTE	FORM BY: MB ASSISTED BY: RB BH JS	# OF HOLES: 1
MATERIAL AS FOUND:	SEE NOTE	PAVING CONDITION: FAIR	DATE DUG: 1-17-00
SIZE AS FOUND:	SEE NOTE	SOIL CONDITIONS:	SOFT MOIST CLAY ROCKY
		UTILITY CONDITION:	GOOD

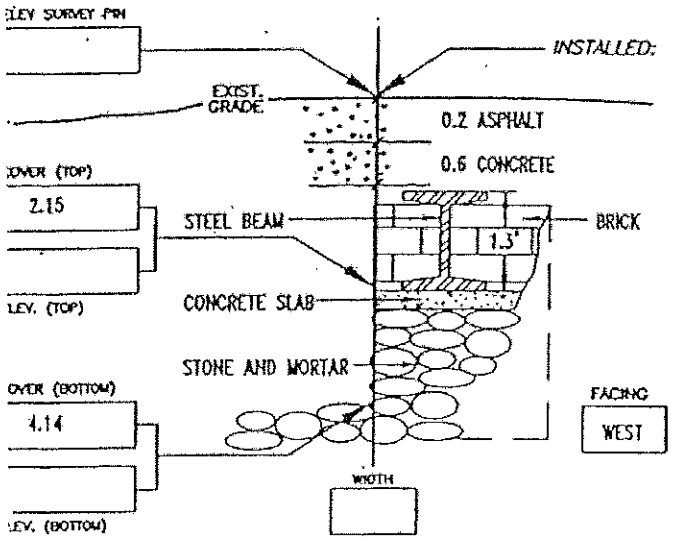

SURVEY PIN LOCATED BY: BALTIMORE CITY DPW

SURVEY INFORMATION: ALL MEASUREMENTS ON THIS FORM ARE IN ENGLISH. NO SURVEY PROVIDED.

NOTES: TEST HOLE REVEALED BRICK AND STEEL BEAM ON A CONCRETE SLAB OVER STONE AND MORTAR. STRUCTURE BELIEVED TO BE PART OF LAND BRIDGE UNDER ALICEANNA STREET. PK SET OVER SOUTH EDGE OF CONCRETE SLAB. UNABLE TO INVESTIGATE FURTHER EAST DUE TO POSSIBLY DAMAGING STRUCTURE AND LOCATION OF AN ELECTRIC VAULT. UNABLE TO ELECTRONICALLY LOCATE TELEPHONE DUCT AT THIS LOCATION. ADDITIONAL TEST HOLE REQUIRED TO LOCATE REQUESTED TELEPHONE DUCT. TOP COVER TAKEN TO TOP OF CONCRETE SLAB. BOTTOM COVER TAKEN TO TOP OF STONE AND MORTAR STEP.

NOT TO SCALE

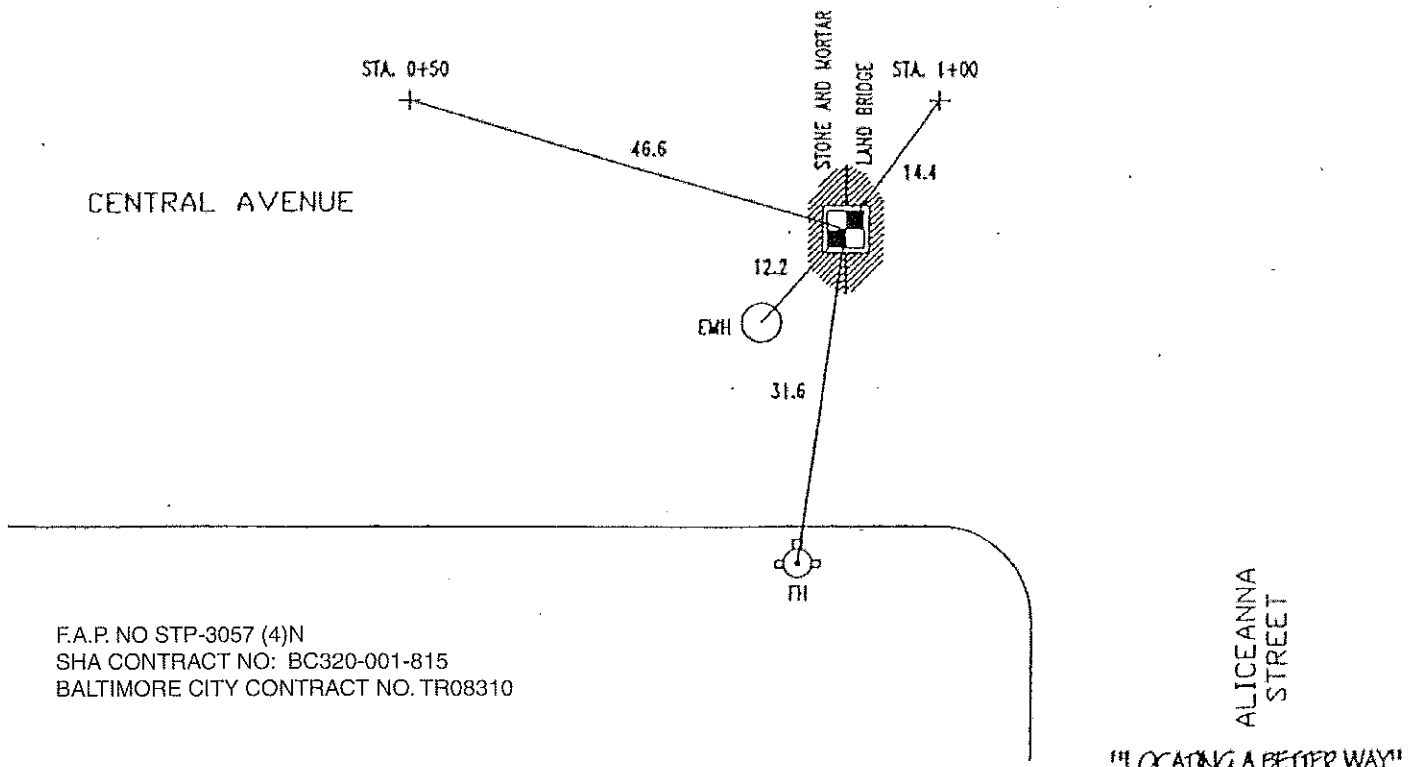

F.A.P. NO STP-3057 (4)N
SHA CONTRACT NO: BC320-001-815
BALTIMORE CITY CONTRACT NO. TR08310

"LOCATING A BETTER WAY" 1-800-UNDERG

FORM DESIGN AND CONTENTS ARE PROTECTED UNDER U.S. COPYRIGHT LAW, 1994

ACCURATE LOCATING inc.

~~P.N.~~ 2000013 VACUUM TEST HOLE REPORT NO.: 2

PROJECT NAME:	CENTRAL AVENUE STORM DRAIN CULVERT	CLIENT JOB# 197-42	WORK ORDER #
LOCATE REQUESTED BY:	RUMMEL, KLEPPER & KAHL, LLP	PROJECT LOCATION:	BALTIMORE CITY, MARYLAND
UTILITY REQUESTED:	10" WATER	SHEET 1 OF 10	PROPOSED: UTILITY WORK
UTILITY FOUND:	WATER	FORM BY: MB ASSISTED BY: JS MTG JW	# OF HOLES: 1
MATERIAL AS FOUND:	CAST IRON	PAVING CONDITION: GOOD	DATE DUG: 1-17-00
SIZE AS FOUND:	10"	SOIL CONDITIONS:	SOFT MOIST CLAY ROCKY
		UTILITY CONDITION:	GOOD

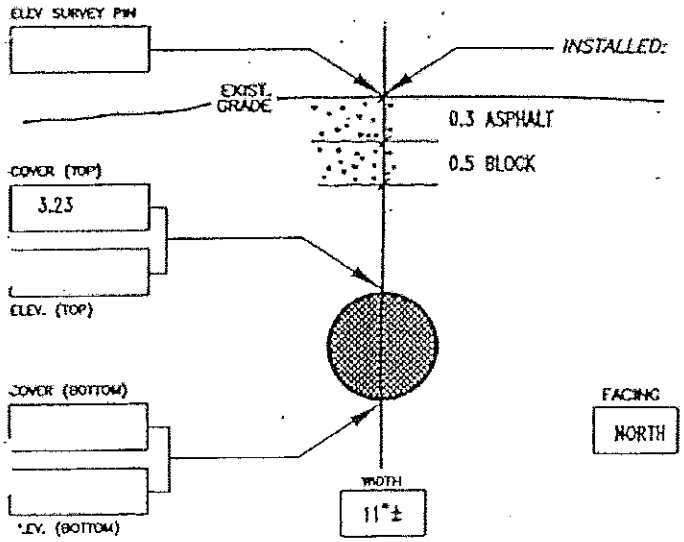

INSTALLED: PK AT: CROWN OF UTILITY. MARKING TAPE: BLUE

SURVEY PIN LOCATED BY: BALTIMORE CITY DPW

SURVEY INFORMATION: ALL MEASUREMENTS ON THIS FORM ARE IN ENGLISH.
NO SURVEY PROVIDED.

NOTES:

NOT TO SCALE

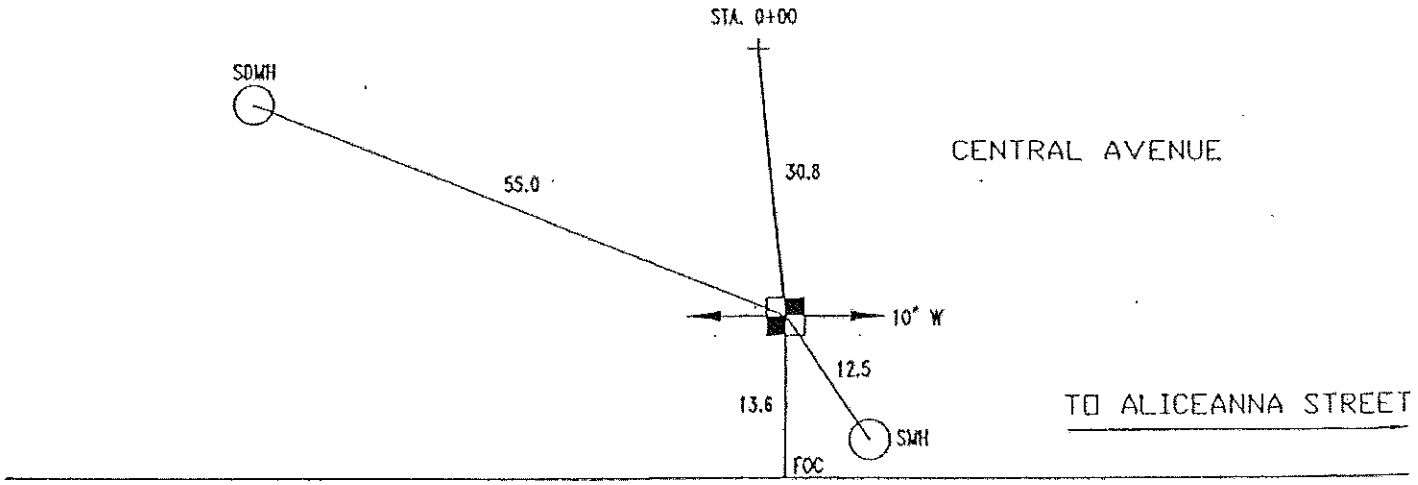

F.A.P. NO STP-3057 (4)N
SHA CONTRACT NO: BC320-001-815
BALTIMORE CITY CONTRACT NO. TR08310

FORM DESIGN AND CONTENTS ARE PROTECTED UNDER U.S. COPYRIGHT LAW, 1994

"LOCATING A BETTER WAY" 1-800-UNDER 11

ACCURATE LOCATING inc.

2000013 VACUUM TEST HOLE REPORT NO.: 216

PROJECT NAME:	CENTRAL AVENUE STORM DRAIN CULVERT	CLIENT JOB #	197-42 WORK ORDER #
LOCATE REQUESTED BY:	RUMMEL, KLEPPER & KAHL, LLP	PROJECT LOCATION:	BALTIMORE CITY, MARYLAND
UTILITY REQUESTED:	10" WATER	SHEET 1 OF 10	PROPOSED: UTILITY WORK
UTILITY FOUND:	WATER	FORM BY: MB ASSISTED BY: RR MTG	# OF HOLES: 1
MATERIAL AS FOUND:	CAST IRON	PAVING CONDITION: GOOD	DATE DUG: 1-17-00
SIZE AS FOUND:	10"	SOIL CONDITIONS:	SOFT MOIST CLAY ROCKY
		UTILITY CONDITION:	GOOD

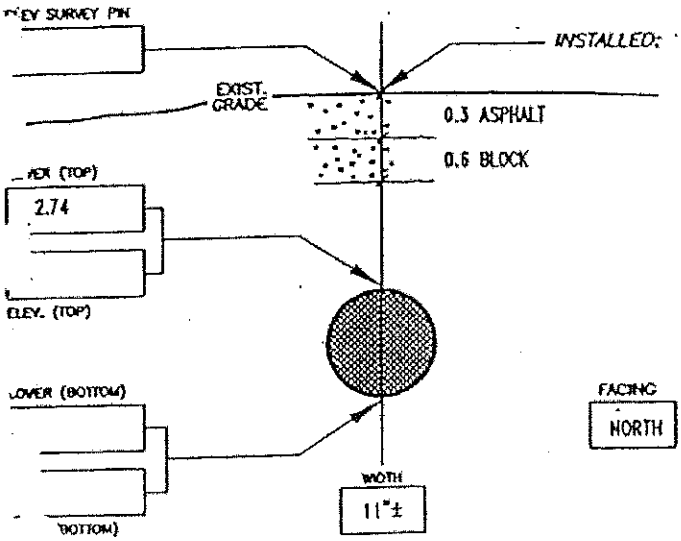

INSTALLED: PK AT: CROWN OF UTILITY. MARKING TAPE: BLUE

SURVEY PIN LOCATED BY: BALTIMORE CITY DPW

SURVEY INFORMATION: ALL MEASUREMENTS ON THIS FORM ARE IN ENGLISH.
NO SURVEY PROVIDED.

NOTES: TEST HOLE PERFORMED 1'± SOUTH OF PROPOSED DUE TO PARKED CARS AT REQUESTED LOCATION.

NOT TO SCALE

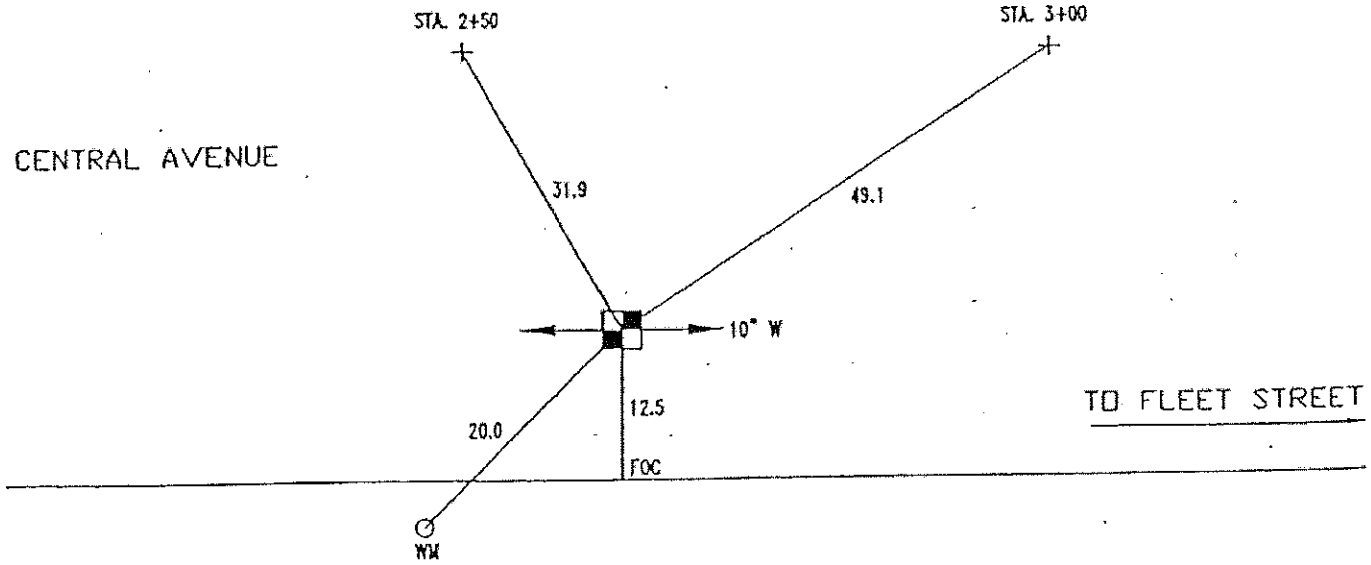

F.A.P. NO STP-3057 (4)N
SHA CONTRACT NO: BC320-001-815
BALTIMORE CITY CONTRACT NO. TR08310

"LOCATING A BETTER WAY" 1-800-UNDER IT

DESIGN AND CONTENTS ARE PROTECTED UNDER U.S. COPYRIGHT LAW, 1994

ACCURATE LOCATING inc.

2000013 VACUUM TEST HOLE REPORT NO.: 217

PROJECT NAME:	CENTRAL AVENUE STORM DRAIN CULVERT	CLIENT JOB#	197-42 WORK ORDER #
LOCATE REQUESTED BY:	RUMMEL, KLEPPER & KAHL, LLP	PROJECT LOCATION:	BALTIMORE CITY, MARYLAND
UTILITY REQUESTED:	16" WATER	SHEET 2 OF 10	PROPOSED: UTILITY WORK
UTILITY FOUND:	WATER	FORM BY: MB	ASSISTED BY: RB JS JCS # OF HOLES: 1
MATERIAL AS FOUND:	CAST IRON TEE	PAVING CONDITION:	GOOD DATE DUG: 1-17-00
SIZE AS FOUND:	SEE NOTE	SOIL CONDITIONS:	SOFT MOIST CLAY ROCKY
		UTILITY CONDITION:	GOOD

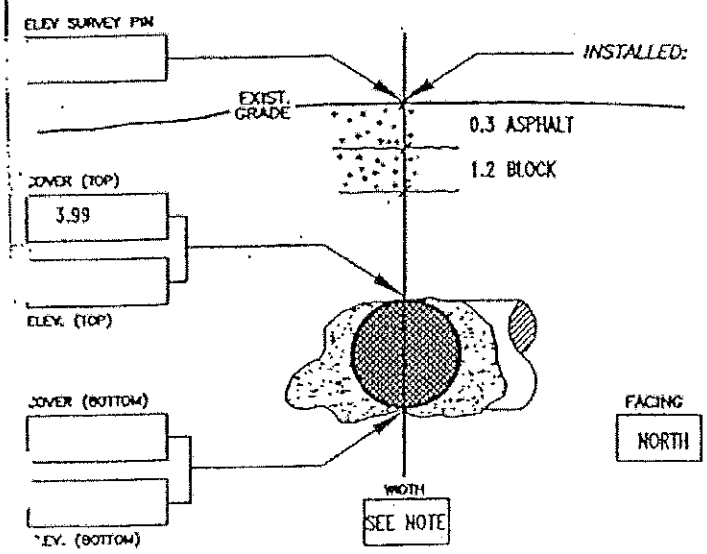

INSTALLED: PK AT: OF UTILITY. MARKING TAPE: BLUE

SURVEY PIN LOCATED BY: BALTIMORE CITY DPW

SURVEY INFORMATION: ALL MEASUREMENTS ON THIS FORM ARE IN ENGLISH.
NO SURVEY PROVIDED.

NOTES: UNABLE TO OBTAIN SIZE OR OD DUE TO CONCRETE OVERPOUR AROUND TEE. PK SET OVER APPROXIMATE CROWN OF TEE.

NOT TO SCALE

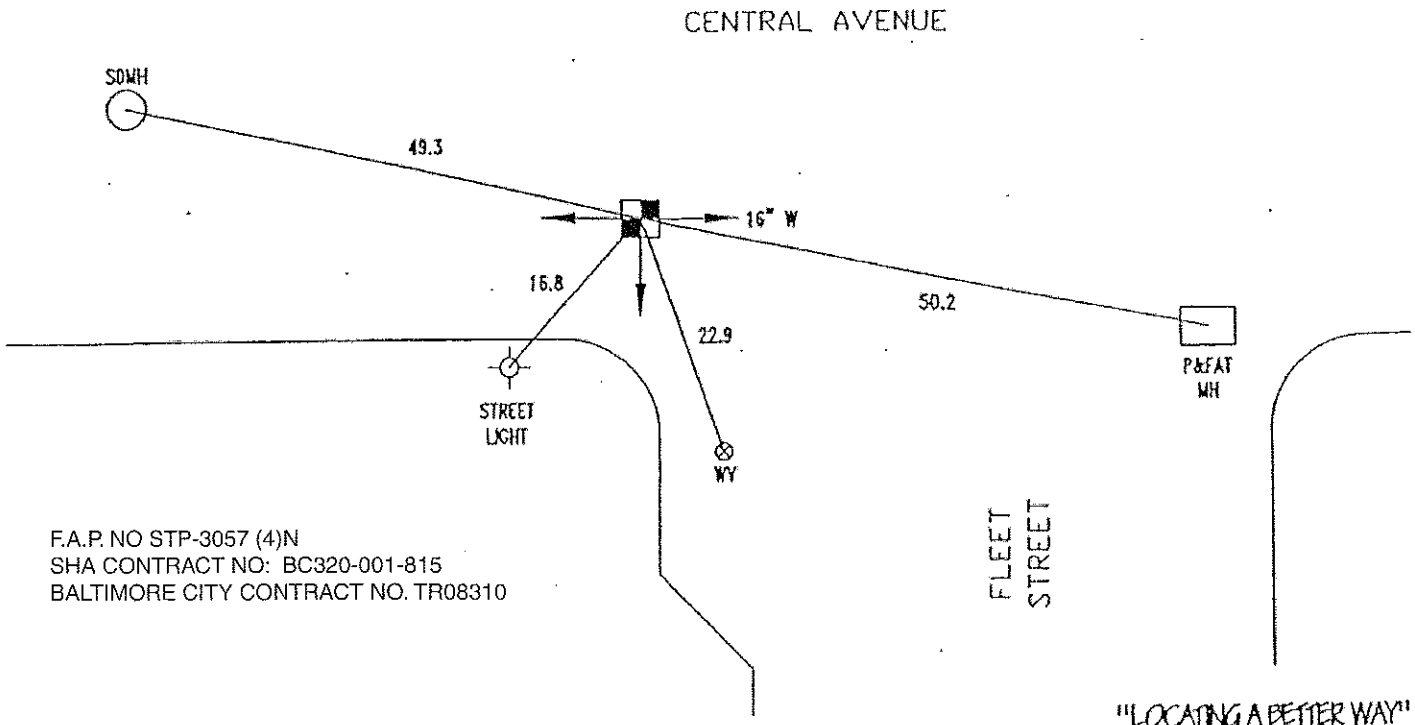

F.A.P. NO STP-3057 (4)N
SHA CONTRACT NO: BC320-001-815
BALTIMORE CITY CONTRACT NO. TR08310

"LOCATING A BETTER WAY"
1-800-UNDERG

FORM DESIGN AND CONTENTS ARE PROTECTED UNDER U.S. COPYRIGHT LAW, 1994

ACCURATE LOCATING inc.

2000015 VACUUM TEST HOLE REPORT NO.: 218

PROJECT NAME:	CENTRAL AVENUE STORM DRAIN CULVERT	CLIENT JOB#	197-42 WORK ORDER #
DATE REQUESTED BY:	RUMMEL, KLEPPER & KAHL, LLP	PROJECT LOCATION:	BALTIMORE CITY, MARYLAND
UTILITY REQUESTED:	10" WATER	SHEET 2 OF 10	PROPOSED: UTILITY WORK
UTILITY FOUND:	WATER	FORM BY: MB	ASSISTED BY: KH # OF HOLES: 1
MATERIAL AS FOUND:	CAST IRON	PAVING CONDITION:	GOOD DATE DUG: 1-12-00
SIZE AS FOUND:	10"	SOIL CONDITIONS:	SOFT MOIST ROCKY
		UTILITY CONDITION:	GOOD

INSTALLED: CHIS "X" AT: CROWN OF UTILITY. MARKING TAPE: BLUE

SURVEY PIN LOCATED BY: BALTIMORE CITY DPW

SURVEY INFORMATION: ALL MEASUREMENTS ON THIS FORM ARE IN ENGLISH.
NO SURVEY PROVIDED.

NOTES: TEST HOLE PERFORMED 1'± SOUTH OF PROPOSED DUE TO PARKED CAR AT REQUESTED LOCATION.

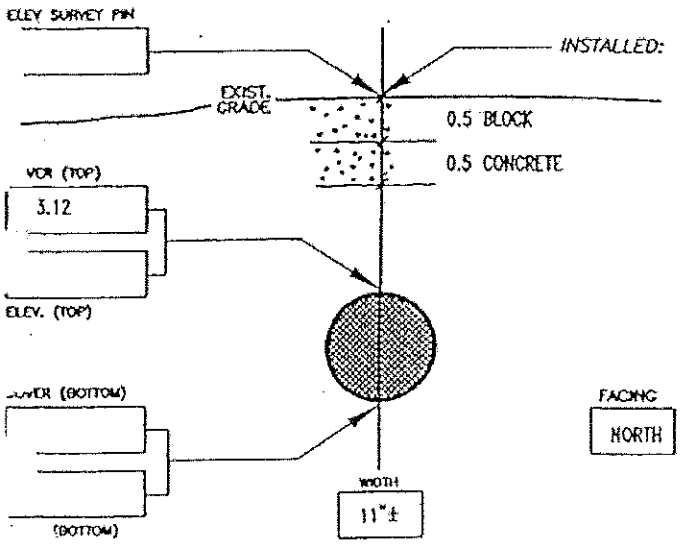

NOT TO SCALE

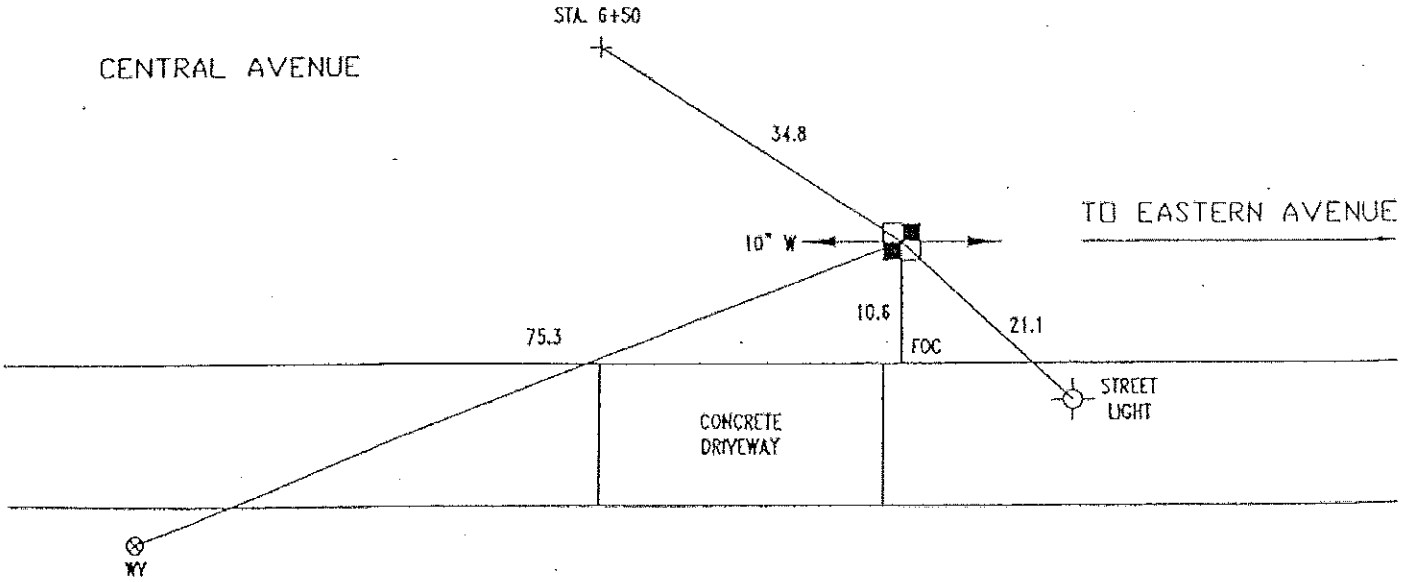

F.A.P. NO STP-3057 (4)N
SHA CONTRACT NO: BC320-001-815
BALTIMORE CITY CONTRACT NO. TR08310

"LOCATING A BETTER WAY"
1-800-UNDER IT

DESIGN AND CONTENTS ARE PROTECTED UNDER U.S. COPYRIGHT LAW, 1994

ACCURATE LOCATING inc.

~~IPN:~~ 2000013 VACUUM TEST HOLE REPORT NO.: 219

PROJECT NAME:	CENTRAL AVENUE STORM DRAIN CULVERT	CLIENT JOB #	197-42 WORK ORDER #
LOCATE REQUESTED BY:	RUMMEL, KLEPPER & KAHL, LLP	PROJECT LOCATION:	BALTIMORE CITY, MARYLAND
UTILITY REQUESTED:	SOUTHERNMOST 42" SANITARY FORCE MAIN	SHEET 2 OF 10	PROPOSED: UTILITY WORK
UTILITY FOUND:	SANITARY FORCE MAIN	FORM BY: MB ASSISTED BY: RB JS MTG	# OF HOLES: 1
MATERIAL AS FOUND:	CAST IRON	PAVING CONDITION: GOOD	DATE DUG: 1-17-00
SIZE AS FOUND:	SEE NOTE	SOIL CONDITIONS:	WET CLAY ROCKY
		UTILITY CONDITION:	GOOD

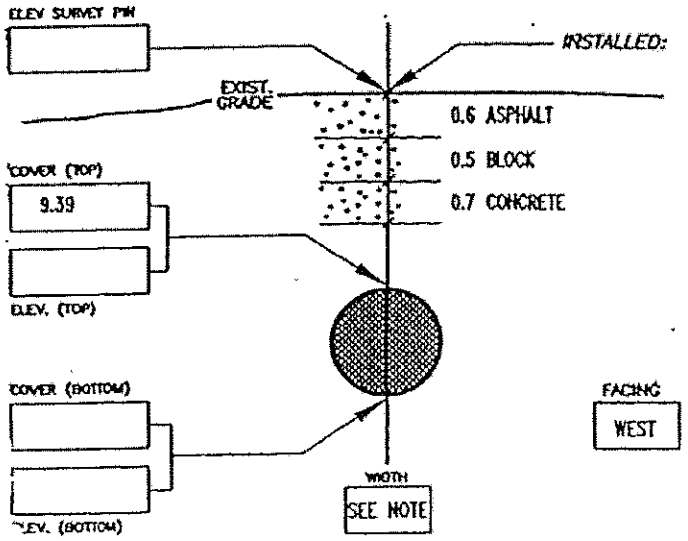

SURVEY PIN LOCATED BY: BALTIMORE CITY DPW

SURVEY INFORMATION: ALL MEASUREMENTS ON THIS FORM ARE IN ENGLISH. NO SURVEY PROVIDED.

NOTES: TEST HOLE PERFORMED 1.5'± EAST OF PROPOSED DUE TO TRAFFIC SITUATION AT REQUESTED LOCATION. UNABLE TO OBTAIN SIZE OR OD DUE TO GROUND WATER AND DEPTH OF UTILITY. UTILITY VERIFIED AS SOUTHERNMOST SANITARY FORCE MAIN BY PROBING.

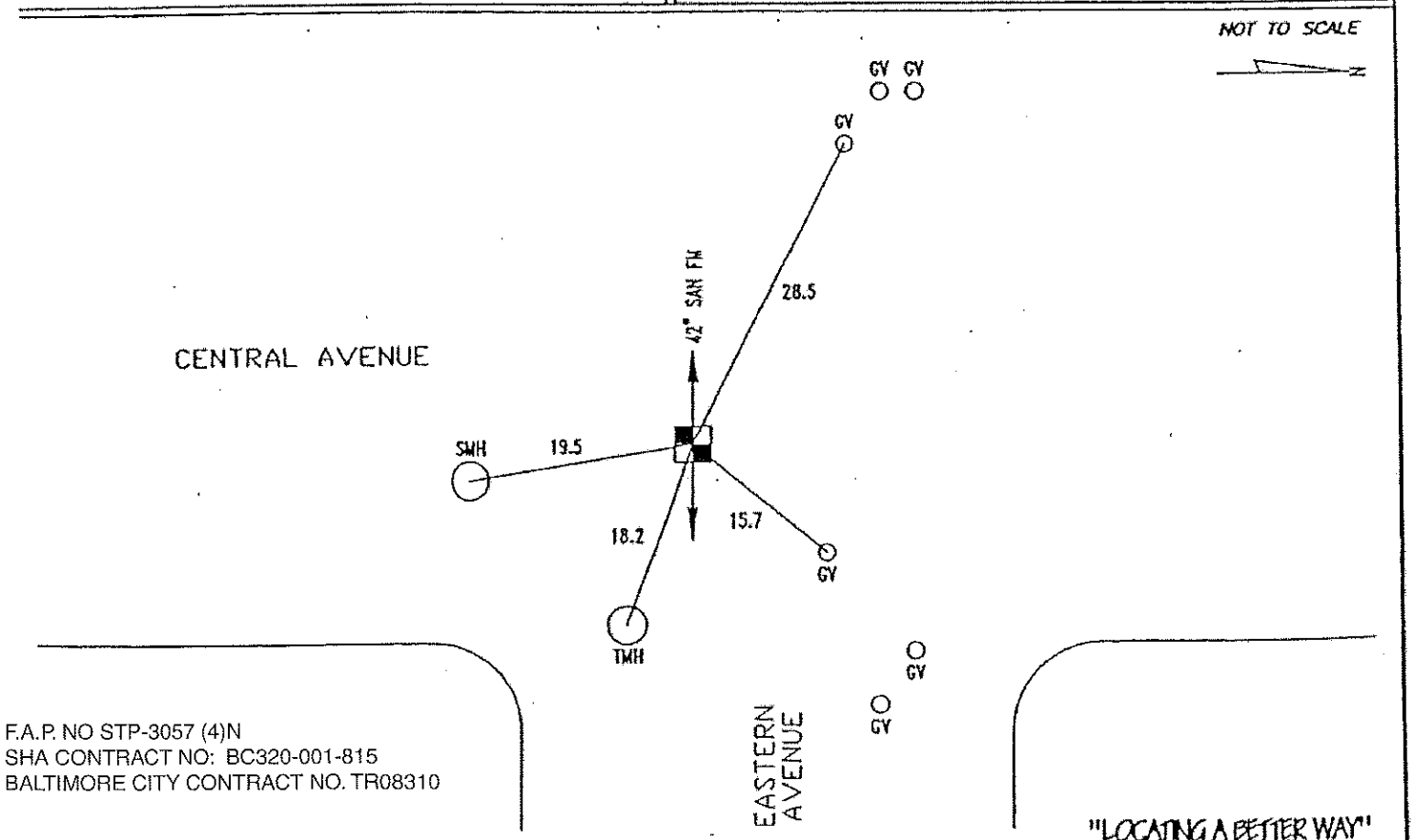

F.A.P. NO STP-3057 (4)N
SHA CONTRACT NO: BC320-001-815
BALTIMORE CITY CONTRACT NO. TR08310

FORM DESIGN AND CONTENTS ARE PROTECTED UNDER U.S. COPYRIGHT LAW, 1994

"LOCATING A BETTER WAY" 1-800-UNDER II

ACCURATE LOCATING inc.

PN: 2000013 VACUUM TEST HOLE REPORT NO.: 220

PROJECT NAME:	CENTRAL AVENUE STORM DRAIN CULVERT	CLIENT JOB #	197-42
LOCATE REQUESTED BY:	RUMMEL, KLEPPER & KAHL, LLP	WORK ORDER #	
UTILITY REQUESTED:	10" WATER	PROJECT LOCATION:	BALTIMORE CITY, MARYLAND
UTILITY FOUND:	WATER	SHEET 5 OF 10	PROPOSED: UTILITY WORK
MATERIAL AS FOUND:	CAST IRON	FORM BY: MB ASSISTED BY: KH	# OF HOLES: 1
SIZE AS FOUND:	10"	PAVING CONDITION: GOOD	DATE DUG: 1-12-00
		SOIL CONDITIONS:	SOFT MOIST CLAY ROCKY
		UTILITY CONDITION:	GOOD

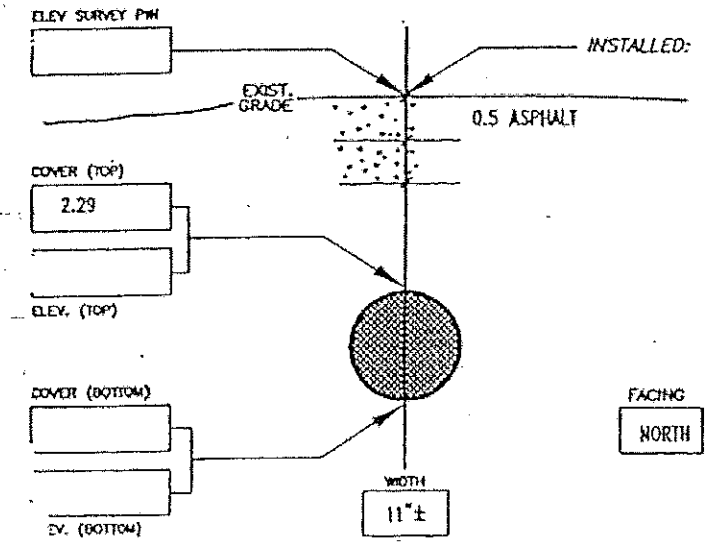

INSTALLED: PK AT: CROWN OF UTILITY. MARKING TAPE: BLUE

SURVEY PIN LOCATED BY: BALTIMORE CITY DPW

SURVEY INFORMATION: ALL MEASUREMENTS ON THIS FORM ARE IN ENGLISH. NO SURVEY PROVIDED.

NOTES:

NOT TO SCALE

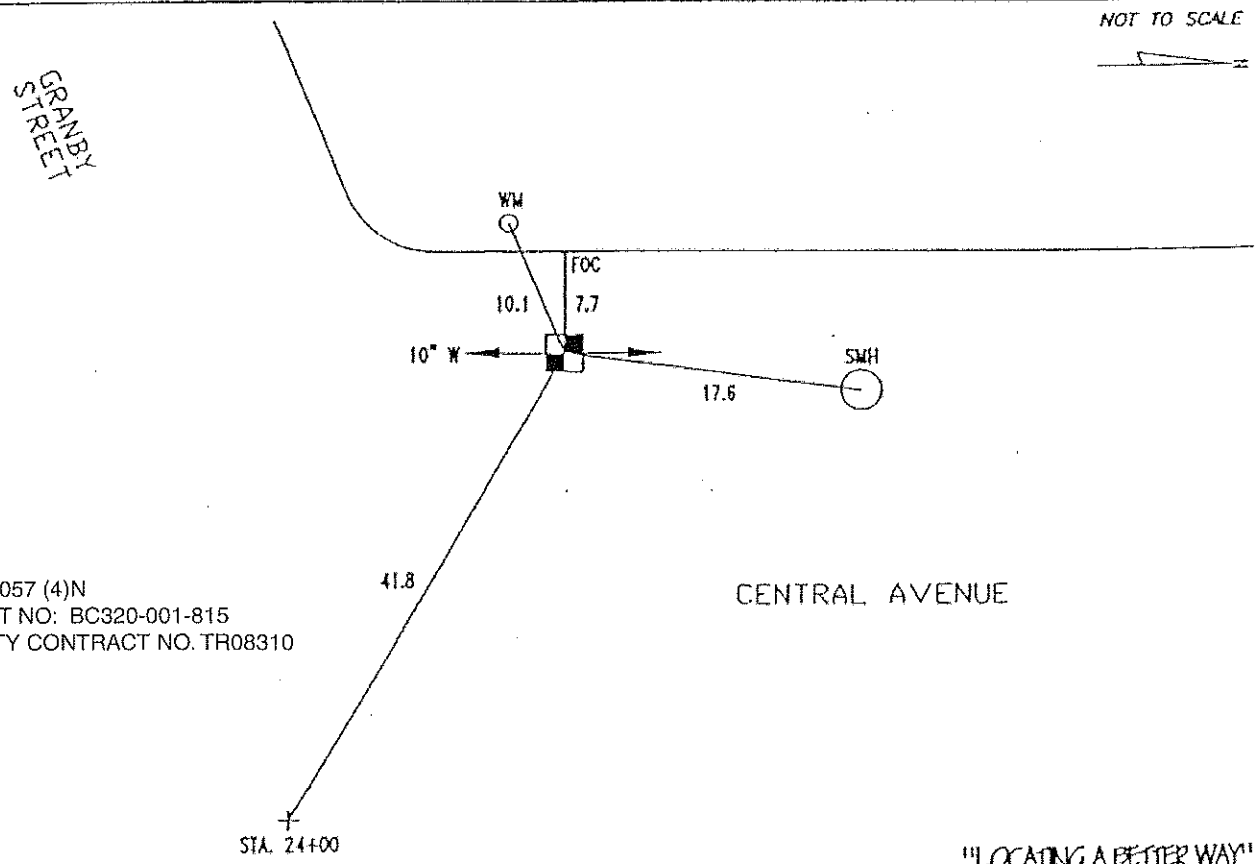

F.A.P. NO STP-3057 (4)N
SHA CONTRACT NO: BC320-001-815
BALTIMORE CITY CONTRACT NO. TR08310

"LOCATING A BETTER WAY" 1-800-UNDER IT

FORM DESIGN AND CONTENTS ARE PROTECTED UNDER U.S. COPYRIGHT LAW, 1994

ACCURATE LOCATING inc.

PN: 2000013 VACUUM TEST HOLE REPORT NO.: 221

PROJECT NAME:	CENTRAL AVENUE STORM DRAIN CULVERT	CLIENT JOB #	197-42 WORK ORDER #
LOCATE REQUESTED BY:	RUMMEL, KLEPPER & KAHL, LLP	PROJECT LOCATION:	BALTIMORE CITY, MARYLAND
UTILITY REQUESTED:	45' BEND ON 40" WATER	SHEET 5 OF 10	PROPOSED: UTILITY WORK
UTILITY FOUND:	WATER	FORM BY: KS ASSISTED BY: MB KH BF	# OF HOLES: 1
MATERIAL AS FOUND:	CAST IRON	PAVING CONDITION: GOOD	DATE DUG: 1-14-00
SIZE AS FOUND:	SEE NOTE	SOIL CONDITIONS:	HARD DRY SAND CLAY ROCKY
		UTILITY CONDITION:	GOOD

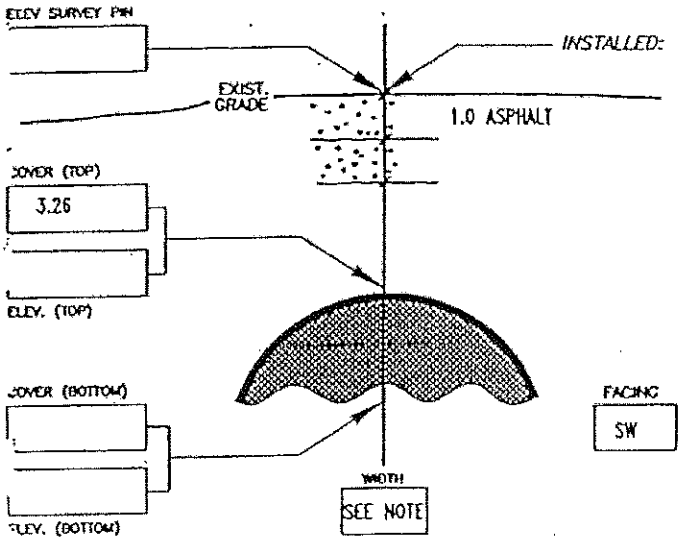

INSTALLED: PK AT: CROWN OF UTILITY. MARKING TAPE: BLUE

SURVEY PIN LOCATED BY: BALTIMORE CITY DPW

SURVEY INFORMATION: ALL MEASUREMENTS ON THIS FORM ARE IN ENGLISH.
NO SURVEY PROVIDED.

NOTES: TEST HOLE PERFORMED AT REQUESTED LOCATION. UNABLE TO LOCATE REQUESTED 45' BEND IN TEST HOLE OR ELECTRONICALLY AT THIS LOCATION. UNABLE TO OBTAIN SIZE OR OD DUE TO LARGE SIZE OF PIPE AND LIMITED SIZE OF TEST HOLE.

NOT TO SCALE

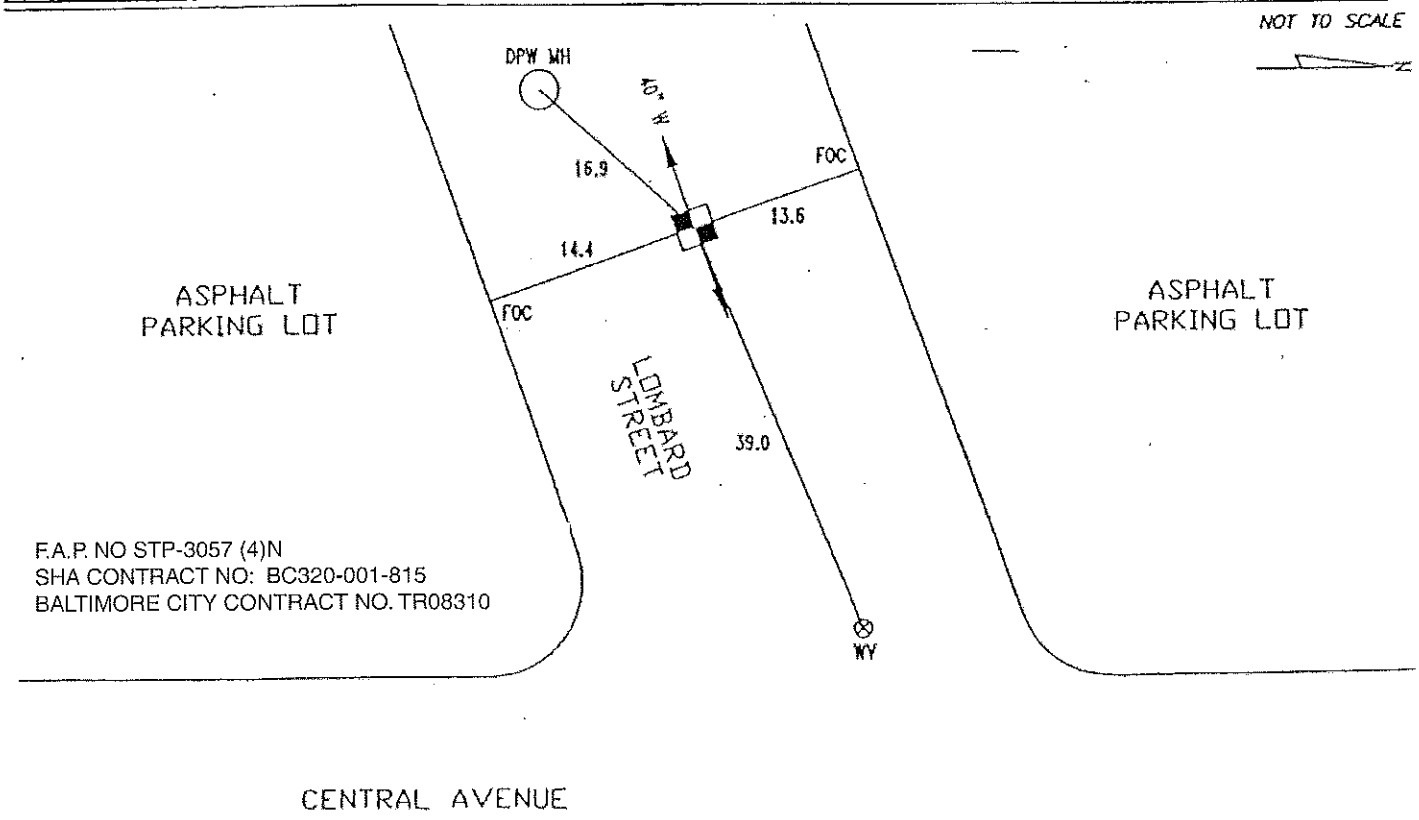

F.A.P. NO STP-3057 (4)N
SHA CONTRACT NO: BC320-001-815
BALTIMORE CITY CONTRACT NO. TR08310

S FORM DESIGN AND CONTENTS ARE PROTECTED UNDER U.S. COPYRIGHT LAW, 1994

"LOCATING A BETTER WAY" 1-800-UNDER IT

ACCURATE LOCATING inc.

W.O.N.: 2000013 VACUUM TEST HOLE REPORT NO.: 222

PROJECT NAME:	CENTRAL AVENUE STORM DRAIN CULVERT	CLIENT JOB #	197-42 WORK ORDER #
LOCATE REQUESTED BY:	RUMMEL, KLEPPER & KAHL, LLP	PROJECT LOCATION:	BALTIMORE CITY, MARYLAND
UTILITY REQUESTED:	4" GAS	SHEET 6 OF 10	PROPOSED: UTILITY WORK
UTILITY FOUND:	GAS	FORM BY: MB	ASSISTED BY: KH # OF HOLES: 1
MATERIAL AS FOUND:	SEE NOTE	PAVING CONDITION:	GOOD DATE DUG: 1-12-00
SIZE AS FOUND:	4"	SOIL CONDITIONS:	SOFT MOIST CLAY ROCKY
		UTILITY CONDITION:	FAIR

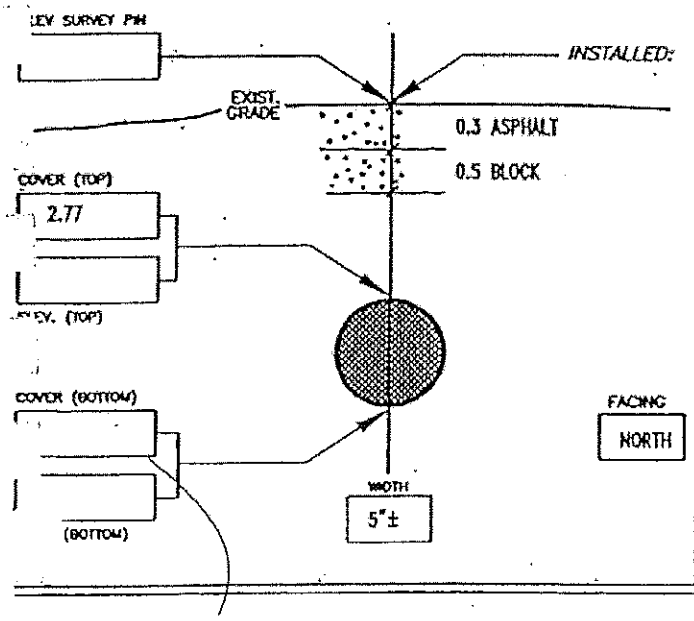

SURVEY PIN LOCATED BY: BALTIMORE CITY DPW

SURVEY INFORMATION: ALL MEASUREMENTS ON THIS FORM ARE IN ENGLISH. NO SURVEY PROVIDED.

NOTES: UNABLE TO DETERMINE MATERIAL TYPE DUE TO CORROSION OF PIPE.

NOT TO SCALE

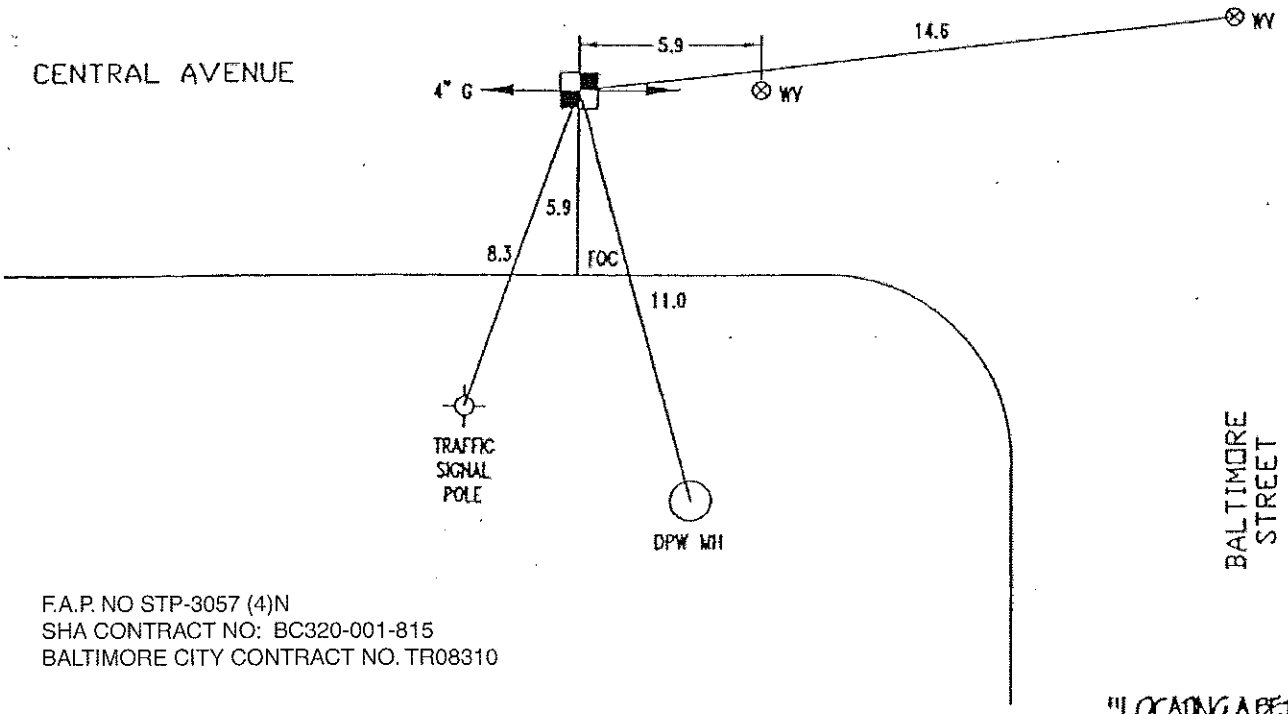

F.A.P. NO STP-3057 (4)N
SHA CONTRACT NO: BC320-001-815
BALTIMORE CITY CONTRACT NO. TR08310

"LOCATING A BETTER WAY" 1-800-UNDERIT

RM DESIGN AND CONTENTS ARE PROTECTED UNDER U.S. COPYRIGHT LAW, 1994

ACCURATE LOCATING inc.

DATE: 2000013 VACUUM TEST HOLE REPORT NO.: 223

PROJECT NAME:	CENTRAL AVENUE STORM DRAIN CULVERT	CLIENT JOB#	197-42 WORK ORDER #
LOCATE REQUESTED BY:	RUMMEL, KLEPPER & KAHL, LLP	PROJECT LOCATION:	BALTIMORE CITY, MARYLAND
UTILITY REQUESTED:	TELEPHONE	SHEET 6 OF 10	PROPOSED: UTILITY WORK
UTILITY FOUND:	TELEPHONE	FORM BY: MB ASSISTED BY: KH	# OF HOLES: 1
MATERIAL AS FOUND:	CLAY	PAVING CONDITION: GOOD	DATE DUG: 1-12-00
SIZE AS FOUND:	DUCT	SOIL CONDITIONS: SOFT MOIST CLAY ROCKY	
		UTILITY CONDITION: GOOD	

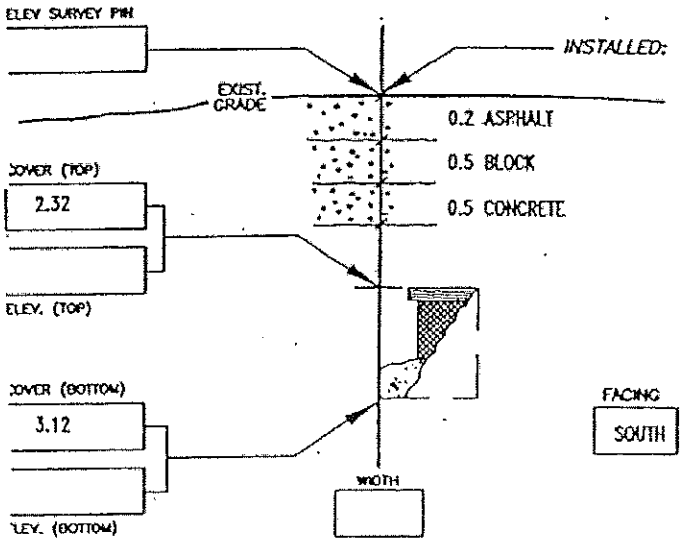

INSTALLED: PK AT: EDGE OF UTILITY. MARKING TAPE: ORANGE

SURVEY PIN LOCATED BY: BALTIMORE CITY DPW

SURVEY INFORMATION: ALL MEASUREMENTS ON THIS FORM ARE IN ENGLISH. NO SURVEY PROVIDED.

NOTES: TEST HOLE REVEALED WOOD ON TOP OF DUCT AND CAST IN PLACE CONCRETE BELOW DUCT. PK SET OVER EASTERNMOST EDGE OF CONCRETE. TOP COVER TAKEN TO TOP OF WOOD, BOTTOM COVER TAKEN TO BOTTOM OF CONCRETE.

NOT TO SCALE

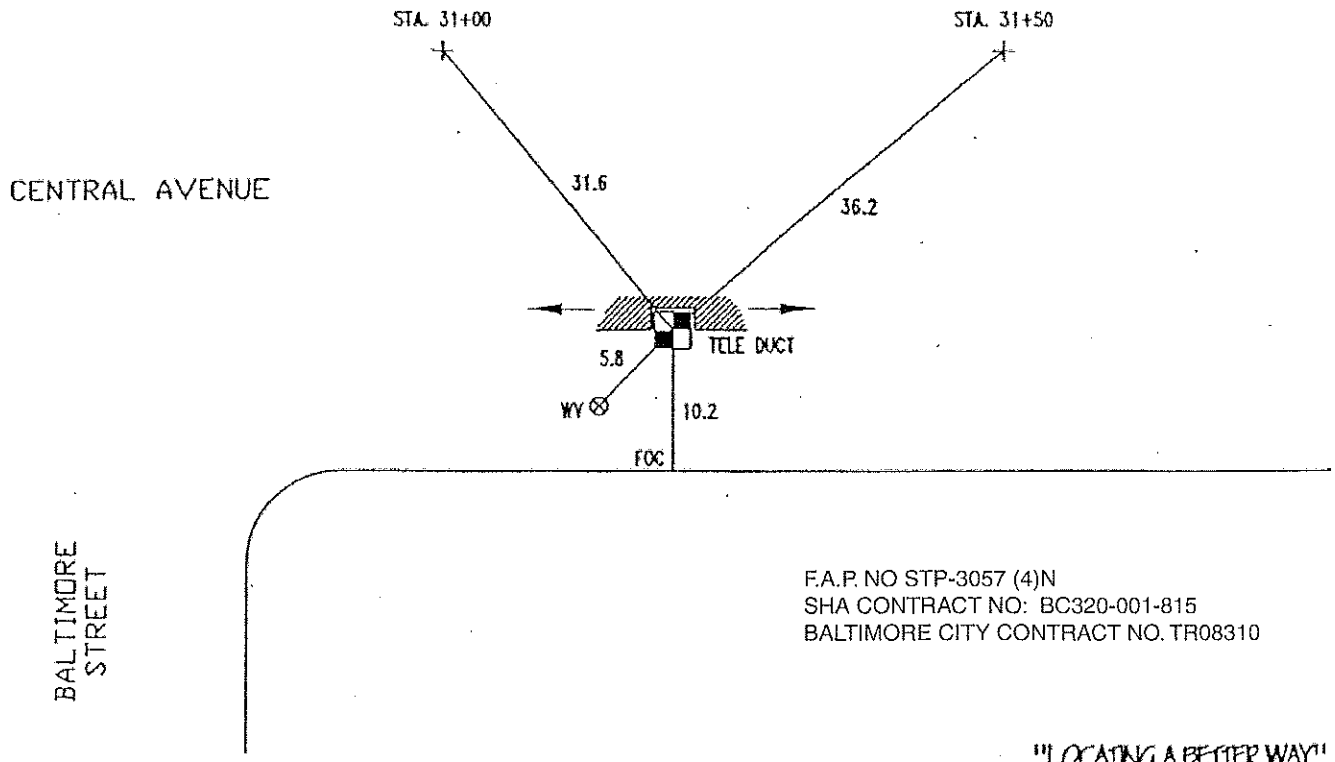

F.A.P. NO STP-3057 (4)N
SHA CONTRACT NO: BC320-001-815
BALTIMORE CITY CONTRACT NO. TR08310

"LOCATING A BETTER WAY"

FORM DESIGN AND CONTENTS ARE PROTECTED UNDER U.S. COPYRIGHT LAW, 1994

ACCURATE LOCATING inc.

PN: 2000013 VACUUM TEST HOLE REPORT NO.: 224

PROJECT NAME:	CENTRAL AVENUE STORM DRAIN CULVERT	CLIENT JOB #	197-42 WORK ORDER #
LOCATE REQUESTED BY:	RUMMEL, KLEPPER & KAHL, LLP	PROJECT LOCATION:	BALTIMORE CITY, MARYLAND
UTILITY REQUESTED:	6" STEAM & 3" RETURN	SHEET 8 OF 10	PROPOSED: UTILITY WORK
UTILITY FOUND:	STEAM	FORM BY: BH ASSISTED BY: MB KH	# OF HOLES: 1
MATERIAL AS FOUND:	BITUMINOUS WRAPPING	PAVING CONDITION: GOOD	DATE DUG: 1-13-00
SIZE AS FOUND:	SEE NOTE	SOIL CONDITIONS:	HARD MOIST CLAY ROCKY
		UTILITY CONDITION:	GOOD

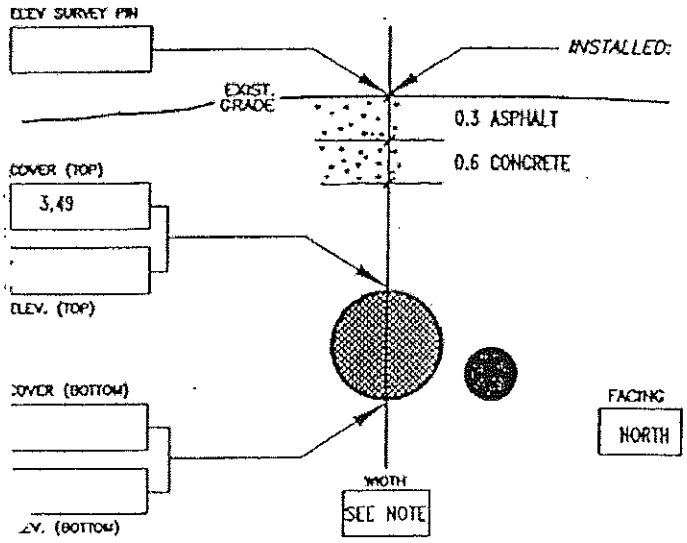

INSTALLED: PK AT: CROWN OF UTILITY. MARKING TAPE: YELLOW

SURVEY PIN LOCATED BY: BALTIMORE CITY DPW

SURVEY INFORMATION: ALL MEASUREMENTS ON THIS FORM ARE IN ENGLISH.
NO SURVEY PROVIDED.

NOTES: TEST HOLE ALSO REVEALED STEAM RETURN PIPE, RUNNING NORTH-SOUTH, OFFSET 1.6'± EAST OF PK. COVER = 3.91. UNABLE TO OBTAIN MATERIAL TYPES OR SIZES DUE TO WRAPPING AROUND PIPES. RECORDS INDICATE A 6" STEAM & 3" RETURN AT THIS LOCATION.

NOT TO SCALE

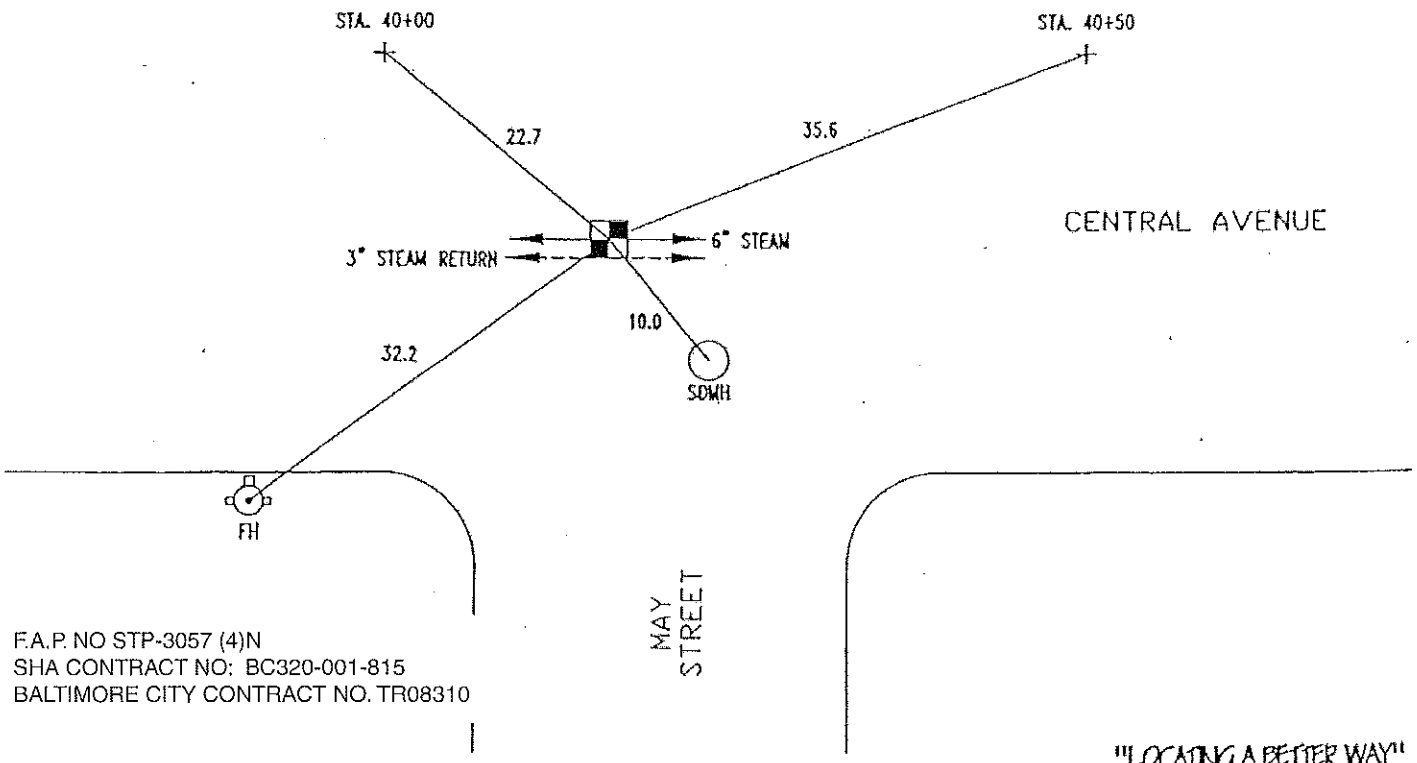

F.A.P. NO STP-3057 (4)N
SHA CONTRACT NO: BC320-001-815
BALTIMORE CITY CONTRACT NO. TR08310

FORM DESIGN AND CONTENTS ARE PROTECTED UNDER U.S. COPYRIGHT LAW, 1994

"LOCATING A BETTER WAY" 1-800-UNDER IT

ACCURATE LOCATING inc.

2000013 VACUUM TEST HOLE REPORT NO.: 225

PROJECT NAME:	CENTRAL AVENUE STORM DRAIN CULVERT	CLIENT JOB#	197-42 WORK ORDER #
OCATE REQUESTED BY:	RUMMEL, KLEPPER & KAHL, LLP	PROJECT LOCATION:	BALTIMORE CITY, MARYLAND
UTILITY REQUESTED:	6" STEAM & 3" RETURN	SHEET 8 OF 10	PROPOSED: UTILITY WORK
UTILITY FOUND:	STEAM	FORM BY: BH ASSISTED BY: MB KH	# OF HOLES: 1
MATERIAL AS FOUND:	BITUMINOUS WRAPPING	PAVING CONDITION: GOOD	DATE DUG: 1-13-00
SIZE AS FOUND:	SEE NOTE	SOIL CONDITIONS:	HARD MOIST CLAY ROCKY
		UTILITY CONDITION:	GOOD

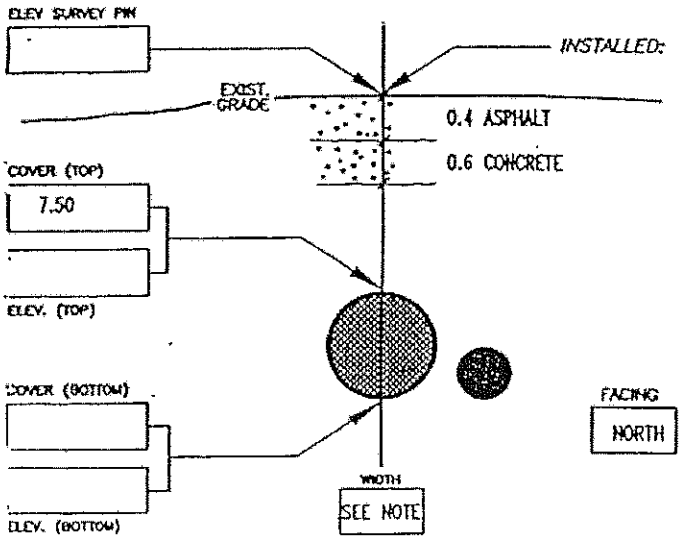

PK AT: CROWN OF UTILITY. MARKING TAPE: : YELLOW

SURVEY PIN LOCATED BY: BALTIMORE CITY DPW

SURVEY INFORMATION: ALL MEASUREMENTS ON THIS FORM ARE IN ENGLISH.
NO SURVEY PROVIDED.

NOTES: TEST HOLE ALSO REVEALED STEAM RETURN PIPE, RUNNING NORTH-SOUTH, OFFSET 1.6'± EAST OF PK. COVER = 7.81. UNABLE TO OBTAIN MATERIAL TYPES OR SIZES DUE TO WRAPPING AROUND PIPES. RECORDS INDICATE A 6" STEAM & 3" RETURN AT THIS LOCATION.

NOT TO SCALE

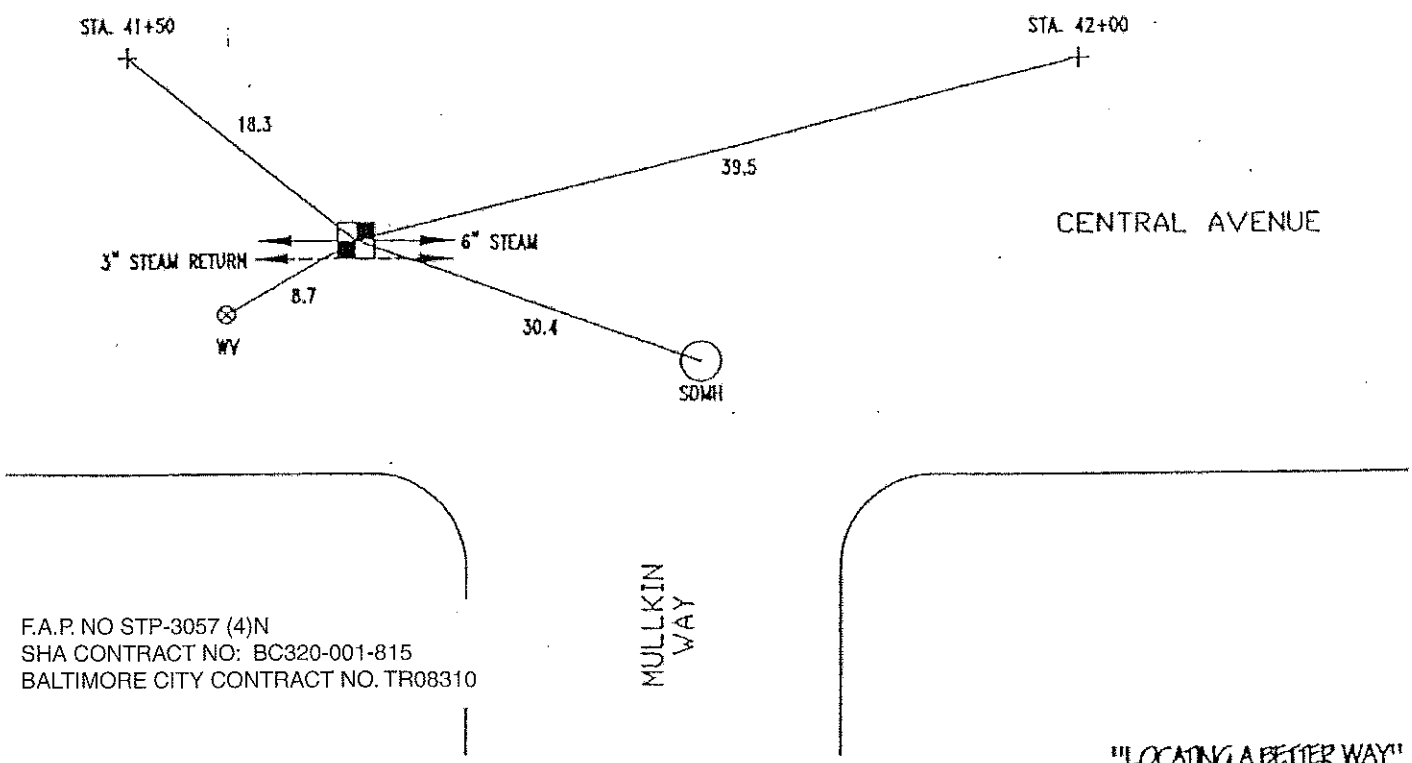

F.A.P. NO STP-3057 (4)N
SHA CONTRACT NO: BC320-001-815
BALTIMORE CITY CONTRACT NO. TR08310

"LOCATING A BETTER WAY" 1-800-UNDERG

FORM DESIGN AND CONTENTS ARE PROTECTED UNDER U.S. COPYRIGHT LAW, 1994

ACCURATE LOCATING inc.

P.N.: 2000013 VACUUM TEST HOLE REPORT NO.: 226

PROJECT NAME:	CENTRAL AVENUE STORM DRAIN CULVERT	CLIENT JOB#	197-42 WORK ORDER #
LOCATE REQUESTED BY:	RUMMEL, KLEPPER & KAHL, LLP	PROJECT LOCATION:	BALTIMORE CITY, MARYLAND
UTILITY REQUESTED:	6" STEAM & 3" RETURN	SHEET 8 OF 10	PROPOSED: UTILITY WORK
UTILITY FOUND:	STEAM	FORM BY: MB	ASSISTED BY: KS BF KH # OF HOLES: 1
MATERIAL AS FOUND:	BITUMINOUS WRAPPING	PAVING CONDITION:	GOOD DATE DUG: 1-14-00
SIZE AS FOUND:	SEE NOTE	SOIL CONDITIONS:	SOFT MOIST CLAY ROCKY
		UTILITY CONDITION:	GOOD

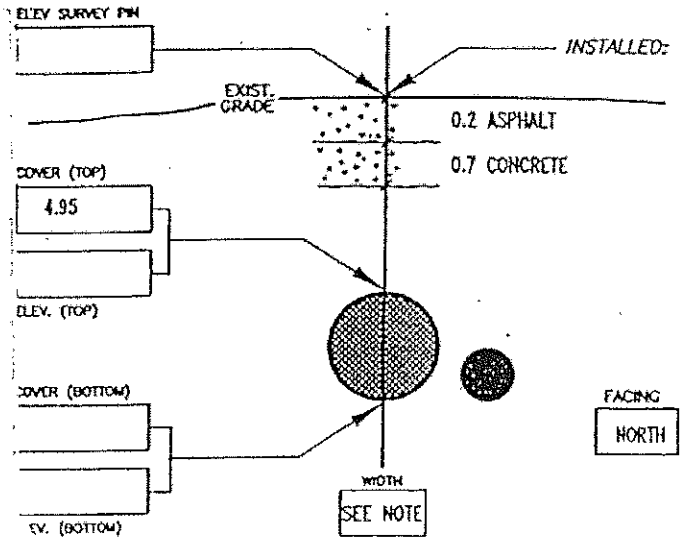

INSTALLED: PK AT: CROWN OF UTILITY. MARKING TAPE: YELLOW

SURVEY PIN LOCATED BY: BALTIMORE CITY DPW

SURVEY INFORMATION: ALL MEASUREMENTS ON THIS FORM ARE IN ENGLISH.
NO SURVEY PROVIDED.

NOTES: TEST HOLE ALSO REVEALED STEAM RETURN PIPE, RUNNING NORTH-SOUTH, OFFSET 1.8'± EAST OF PK. COVER = 5.26. UNABLE TO OBTAIN MATERIAL TYPES OR SIZES DUE TO WRAPPING AROUND PIPES. RECORDS INDICATE A 6" STEAM & 3" RETURN AT THIS LOCATION.

NOT TO SCALE

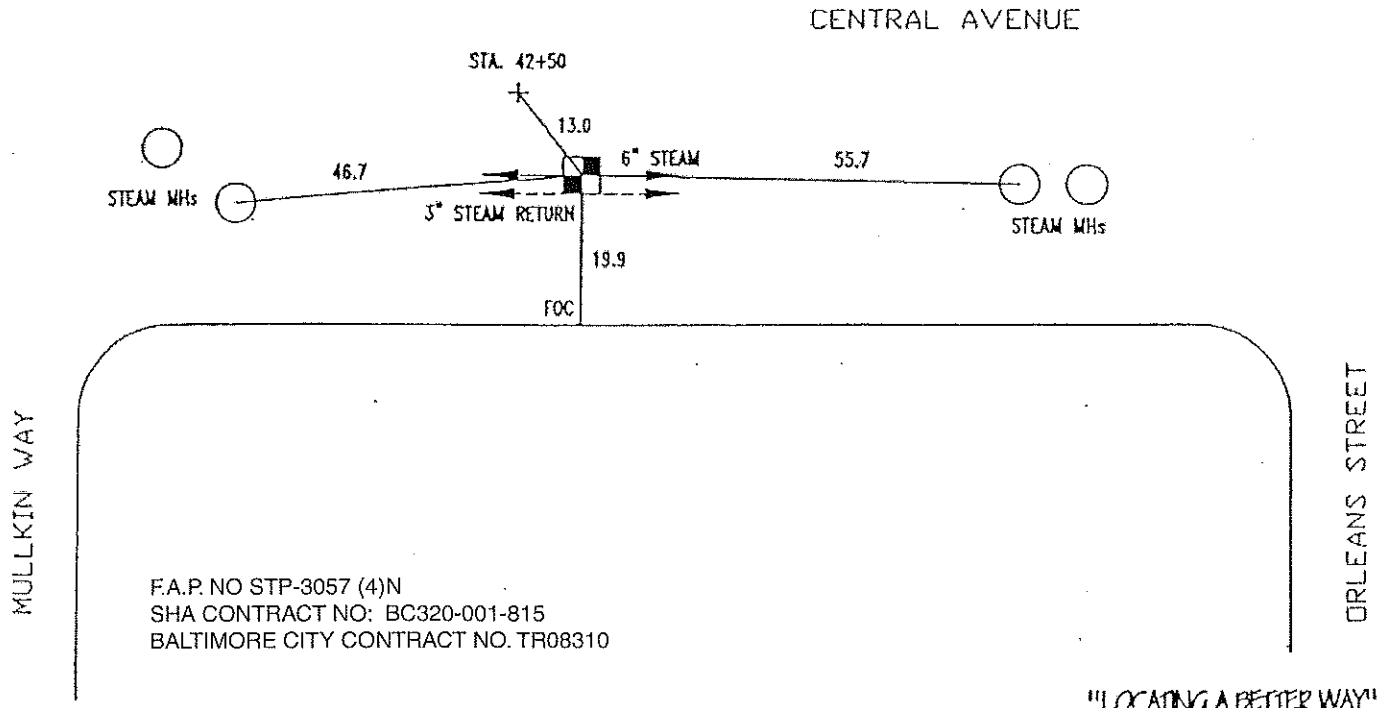

F.A.P. NO STP-3057 (4)N
SHA CONTRACT NO: BC320-001-815
BALTIMORE CITY CONTRACT NO. TR08310

"LOCATING A BETTER WAY"
1-800-UNDER IT

FORM DESIGN AND CONTENTS ARE PROTECTED UNDER U.S. COPYRIGHT LAW, 1994

ACCURATE LOCATING inc.

PN: 2000013 VACUUM TEST HOLE REPORT NO.: 227

PROJECT NAME:	CENTRAL AVENUE STORM DRAIN CULVERT	CLIENT JOB#	197-42 WORK ORDER #
LOCATE REQUESTED BY:	RUMMEL, KLEPPER & KAHL, LLP	PROJECT LOCATION:	BALTIMORE CITY, MARYLAND
UTILITY REQUESTED:	90° BEND ON 12" STEAM	SHEET 8 OF 10	PROPOSED: UTILITY WORK
UTILITY FOUND:	STEAM	FORM BY: BH ASSISTED BY: KH MB	# OF HOLES: 1
MATERIAL AS FOUND:	SEE NOTE	PAVING CONDITION: GOOD	DATE DUG: 1-13-00
SIZE AS FOUND:	SEE NOTE	SOIL CONDITIONS:	SOFT MOIST CLAY ROCKY
		UTILITY CONDITION:	GOOD

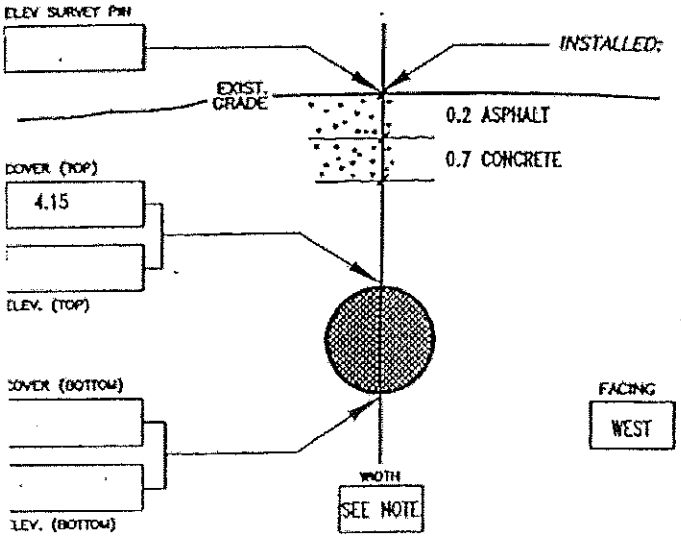

PK AT: CROWN OF UTILITY. MARKING TAPE: YELLOW

SURVEY PIN LOCATED BY: BALTIMORE CITY DPW

SURVEY INFORMATION: ALL MEASUREMENTS ON THIS FORM ARE IN ENGLISH. NO SURVEY PROVIDED.

NOTES: TEST HOLE REVEALED CHANGE IN CASING MATERIAL. THIN PLASTIC CASING AROUND BITUMINOUS WRAPPING TOWARDS THE EAST, BITUMINOUS WRAPPING TOWARDS THE WEST. UNABLE TO OBTAIN SIZE OR 90° BEND DUE TO FLOW ASH.

NOT TO SCALE

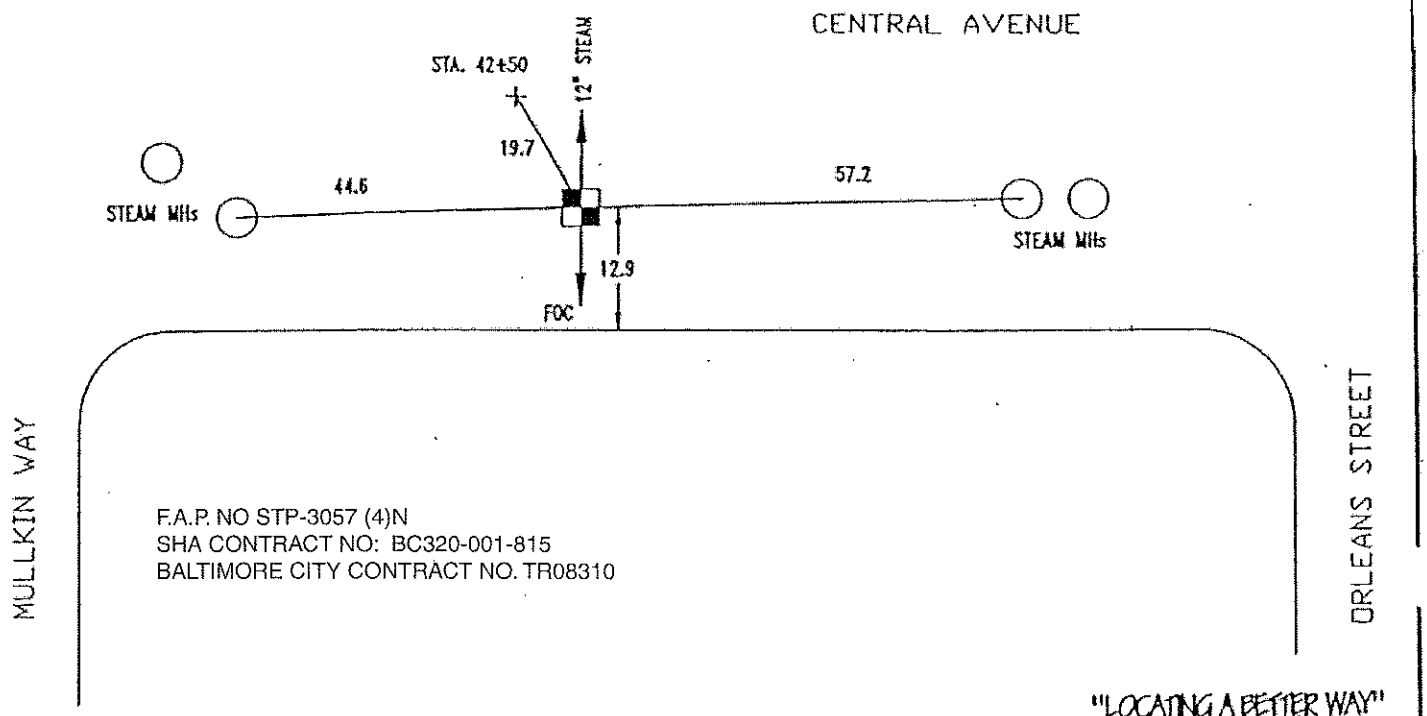

F.A.P. NO STP-3057 (4)N
SHA CONTRACT NO: BC320-001-815
BALTIMORE CITY CONTRACT NO. TR08310

"LOCATING A BETTER WAY" 1-800-UNDERG

© FORM DESIGN AND CONTENTS ARE PROTECTED UNDER U.S. COPYRIGHT LAW, 1994

ACCURATE LOCATING inc.

PN: 2000013 VACUUM TEST HOLE REPORT NO.: 22

PROJECT NAME:	CENTRAL AVENUE STORM DRAIN CULVERT	CLIENT JOB #	197-42 WORK ORDER #
LOCATE REQUESTED BY:	RUMMEL, KLEPPER & KAHL, LLP	PROJECT LOCATION:	BALTIMORE CITY, MARYLAND
UTILITY REQUESTED:	END OF STEAM CASING	SHEET 8 OF 10	PROPOSED: UTILITY WORK
UTILITY FOUND:	SEE NOTE	FORM BY: MB	ASSISTED BY: KS BF BH # OF HOLES: 1
MATERIAL AS FOUND:	SEE NOTE	PAVING CONDITION:	GOOD DATE DUG: 1-14-00
SIZE AS FOUND:	SEE NOTE	SOIL CONDITIONS:	SEE NOTE
		UTILITY CONDITION:	SEE NOTE

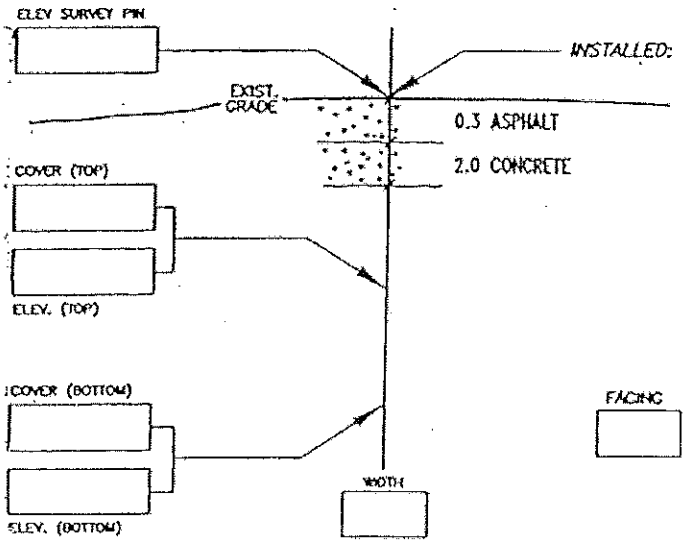

INSTALLED: SEE NOTE AT: OF UTILITY. MARKING TAPE:

SURVEY PIN LOCATED BY: BALTIMORE CITY DPW

SURVEY INFORMATION: ALL MEASUREMENTS ON THIS FORM ARE IN ENGLISH.
NO SURVEY PROVIDED.

NOTES: TEST HOLE PERFORMED AT REQUESTED LOCATION. TEST HOLE PERFORMED TO A DEPTH OF 2.3±. UNABLE TO LOCATE REQUESTED UTILITY DUE TO DEPTH OF CONCRETE, CLOSE PROXIMITY AND RISK OF DAMAGING SURROUNDING DUCTS. NO SURVEY MARKER SET. ALL TIES TAKEN TO CENTER OF TEST HOLE ATTEMPT.

NOT TO SCALE

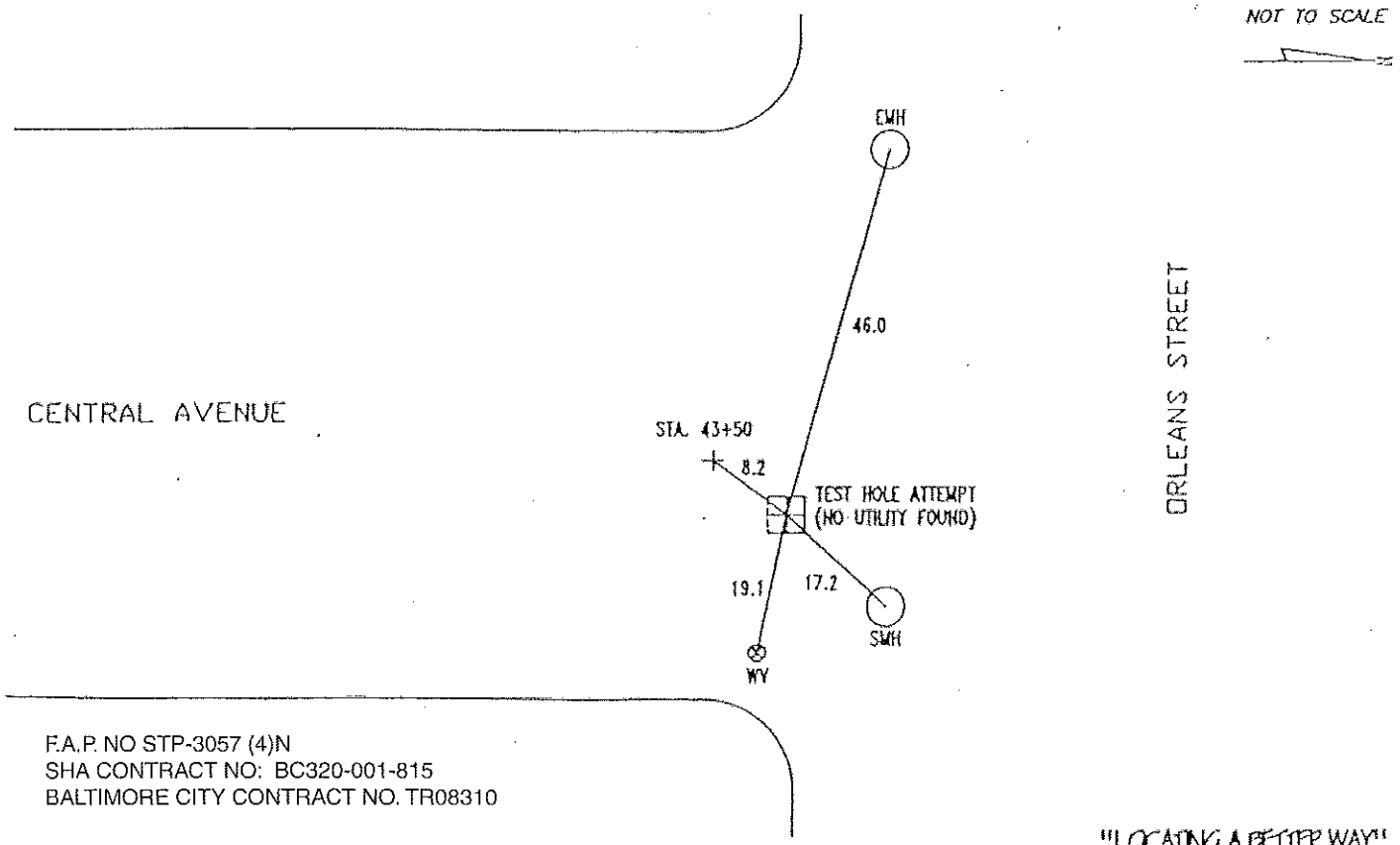

F.A.P. NO STP-3057 (4)N
SHA CONTRACT NO: BC320-001-815
BALTIMORE CITY CONTRACT NO. TR08310

IS FORM DESIGN AND CONTENTS ARE PROTECTED UNDER U.S. COPYRIGHT LAW, 1994

"LOCATING A BETTER WAY"
1-800-UNDERIT

ACCURATE LOCATING inc.

PN: 2000013 VACUUM TEST HOLE REPORT NO.: 25

ROJECT NAME:	CENTRAL AVENUE STORM DRAIN CULVERT	CLIENT JOB#	197-42 WORK ORDER #
OCATE REQUESTED BY:	RUMMEL, KLEPPER & KAHL, LLP	PROJECT LOCATION:	BALTIMORE CITY, MARYLAND
TILITY REQUESTED:	6" STEAM & 3" RETURN	SHEET 8 OF 10	PROPOSED: UTILITY WORK
TILITY FOUND:	STEAM	FORM BY: MB	ASSISTED BY: KS BF KH # OF HOLES: 1
ATERIAL AS FOUND:	BITUMINOUS WRAPPING	PAVING CONDITION:	GOOD DATE DUG: 1-14-00
ZE AS FOUND:	SEE NOTE	SOIL CONDITIONS:	SOFT MOIST CLAY ROCKY
		UTILITY CONDITION:	GOOD

INSTALLED: PK AT: CROWN OF UTILITY. MARKING TAPE: YELLOW

SURVEY PIN LOCATED BY: BALTIMORE CITY DPW

SURVEY INFORMATION: ALL MEASUREMENTS ON THIS FORM ARE IN ENGLISH. NO SURVEY PROVIDED.

NOTES: UNABLE TO OBTAIN SIZE OR OD DUE TO WRAPPING AROUND PIPE. RECORDS INDICATE A 6" STEAM AT THIS LOCATION. UNABLE TO LOCATE 3" RETURN DUE TO DEPTH AND LARGE ROCKS ENCOUNTERED IN TEST HOLE. ADDITIONAL TEST HOLE REQUIRED TO LOCATE 3" RETURN.

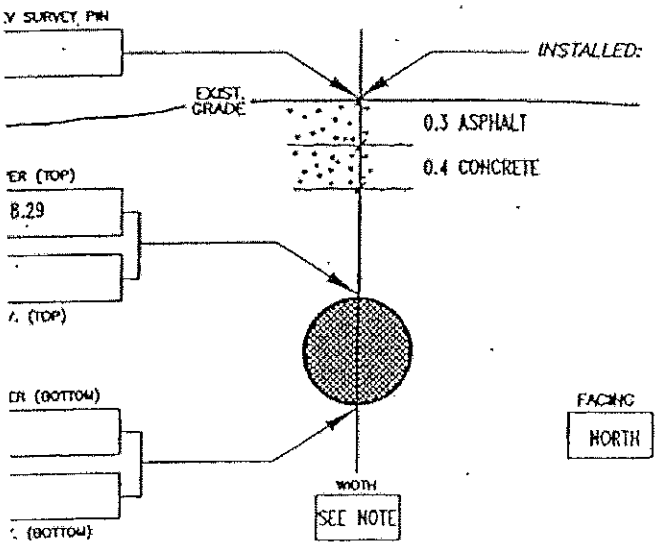

NOT TO SCALE

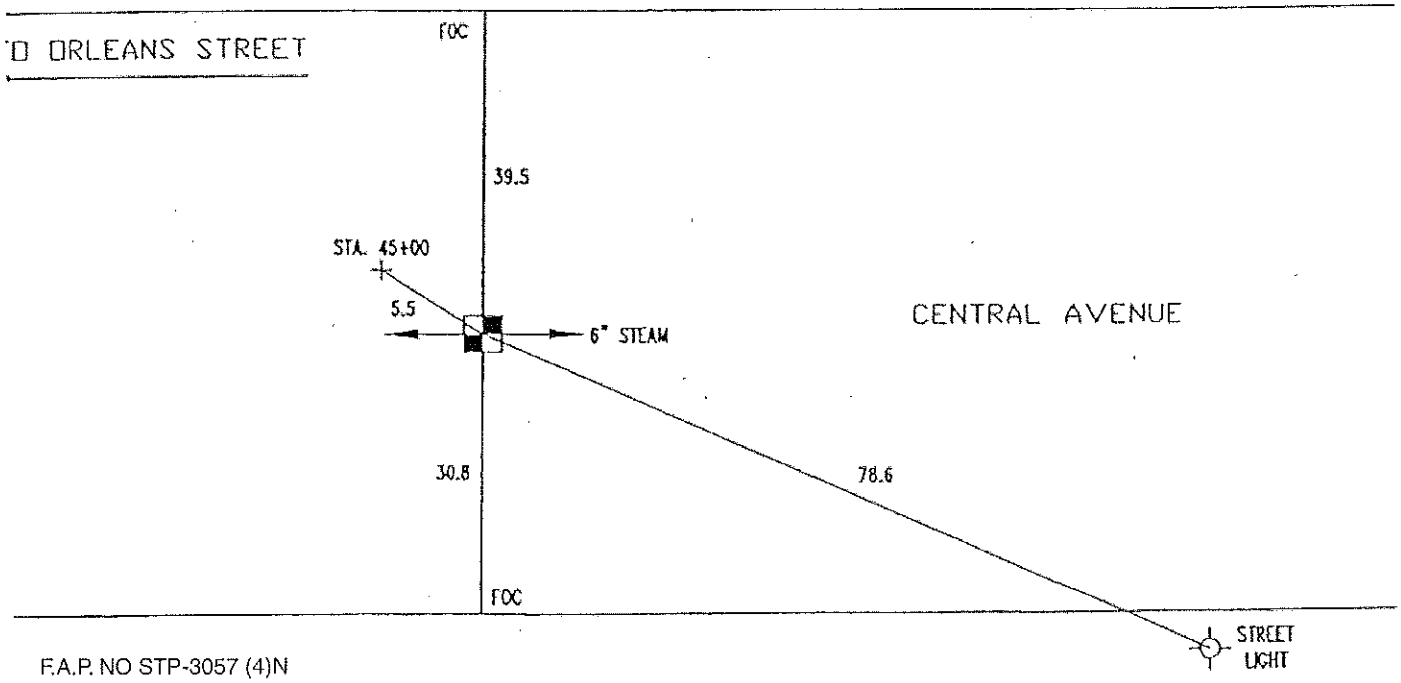

F.A.P. NO STP-3057 (4)N
SHA CONTRACT NO: BC320-001-815
BALTIMORE CITY CONTRACT NO. TR08310

"LOCATING A BETTER WAY" 1-800-UNDERIT

DRW DESIGN AND CONTENTS ARE PROTECTED UNDER U.S. COPYRIGHT LAW, 1994

ACCURATE LOCATING inc.

PN: 2000013 VACUUM TEST HOLE REPORT NO.: 231

PROJECT NAME:	CENTRAL AVENUE STORM DRAIN CULVERT	CLIENT JOB#	197-42 WORK ORDER #
OCATE REQUESTED BY:	RUMMEL, KLEPPER & KAHL, LLP	PROJECT LOCATION:	BALTIMORE CITY, MARYLAND
UTILITY REQUESTED:	45° BEND ON 16" WATER	SHEET 9 OF 10	PROPOSED: UTILITY WORK
UTILITY FOUND:	WATER	FORM BY: MB ASSISTED BY: KH	# OF HOLES: 1
MATERIAL AS FOUND:	CAST IRON	PAVING CONDITION: FAIR	DATE DUG: 1-11-00
SIZE AS FOUND:	16"	SOIL CONDITIONS:	SOFT MOIST CLAY ROCKY
		UTILITY CONDITION:	GOOD

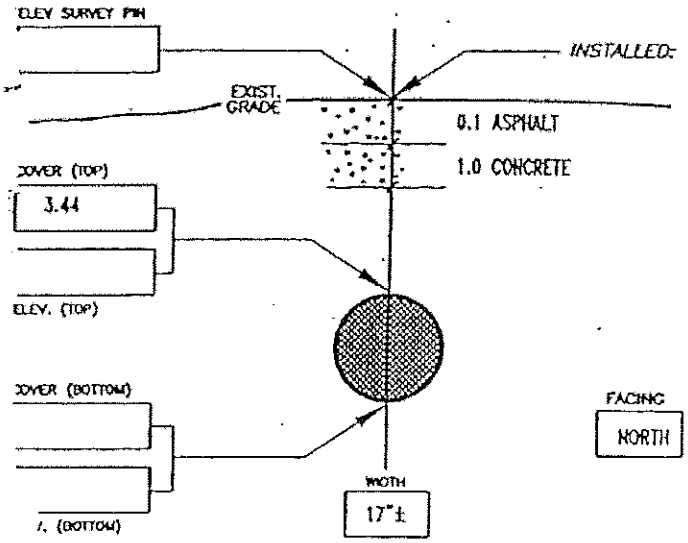

PK AT: CROWN OF UTILITY. MARKING TAPE: : BLUE

SURVEY PIN LOCATED BY: BALTIMORE CITY DPW

SURVEY INFORMATION: ALL MEASUREMENTS ON THIS FORM ARE IN ENGLISH.
NO SURVEY PROVIDED.

NOTES: 45° BEND ON 16" WATER REQUESTED AT THIS LOCATION; HOWEVER TEST HOLE REVEALED STRAIGHT RUN OF 16" WATER.

NOT TO SCALE

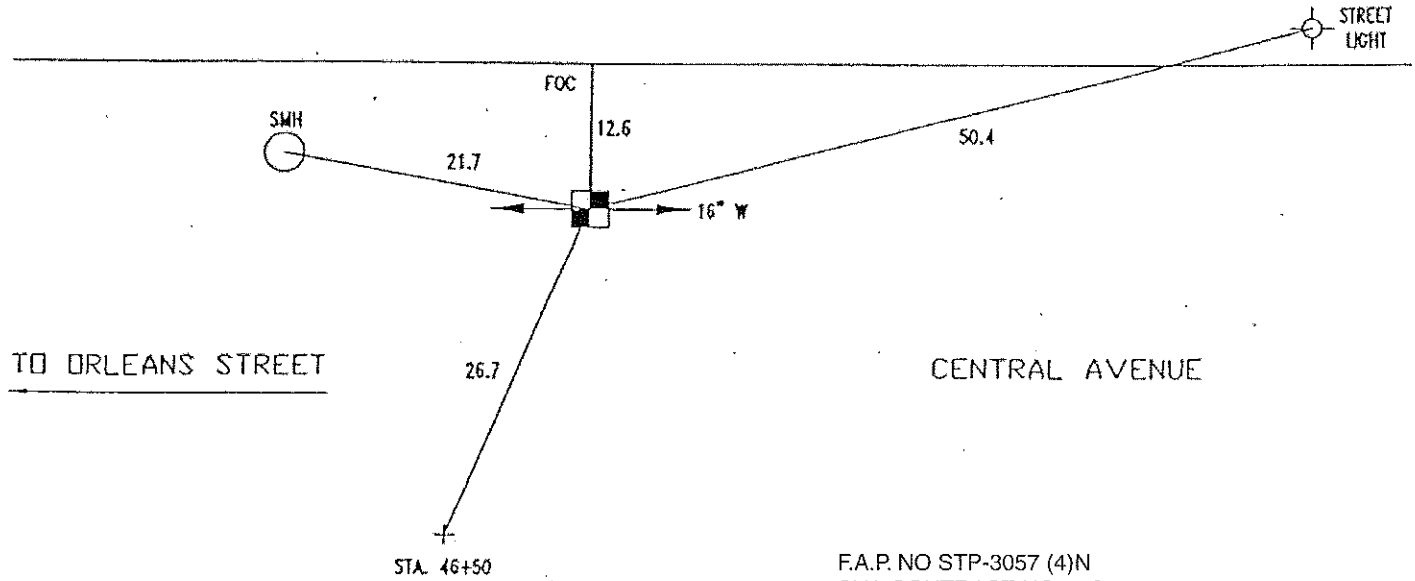

F.A.P. NO STP-3057 (4)N
SHA CONTRACT NO: BC320-001-815
BALTIMORE CITY CONTRACT NO. TR08310

FORM DESIGN AND CONTENTS ARE PROTECTED UNDER U.S. COPYRIGHT LAW, 1994

"LOCATING A BETTER WAY"
1-800-UNDER IT

ACCURATE LOCATING inc.

PN: 2000013 TEST PIT REPORT NO.

PROJECT NAME:	CENTRAL AVENUE STORM DRAIN CULVERT	CLIENT JOB #	197-42 WORK ORDER #
LOCATE REQUESTED BY:	RUMMEL, KLEPPER & KAHL, LLP	PROJECT LOCATION:	BALTIMORE CITY, MARYLAND
UTILITY REQUESTED:	STORM DRAIN CULVERT ABUTMENT & TELE DUCT	SHEET 1 OF 10	PROPOSED: UTILITY WORK
UTILITY FOUND:	STORM DRAIN CULVERT ABUTMENT	FORM BY: MB ASSISTED BY: BH	# OF HOLES:
MATERIAL AS FOUND:	STONE & MORTAR	PAVING CONDITION: FAIR	DATE DUG: 1-18-00
SIZE AS FOUND:	N/A	SOIL CONDITIONS:	SOFT WET MOIST CLAY ROCKY
		UTILITY CONDITION:	FAIR

INSTALLED: PK AT: EDGE OF UTILITY, MARKING TAPE: PINK

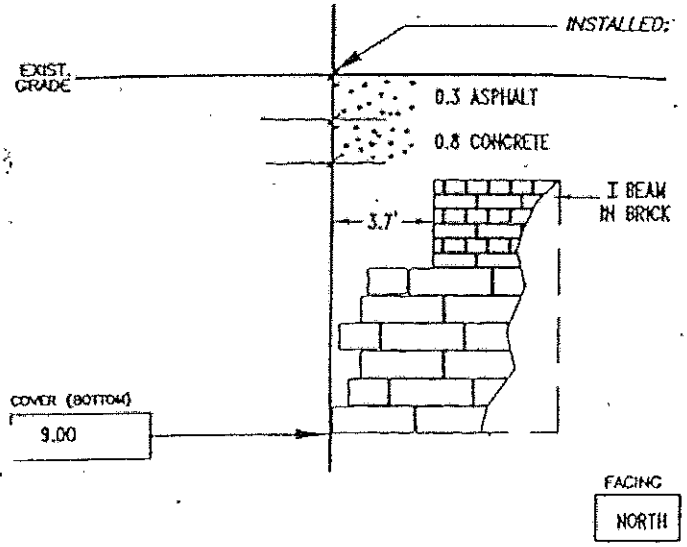

SURVEY PIN LOCATED BY: BALTIMORE CITY DPW

SURVEY INFORMATION: ALL MEASUREMENTS ON THIS FORM ARE IN ENGLISH. NO SURVEY PROVIDED.

NOTES: PK SET OVER WEST EDGE OF CULVERT. OFFSET TO WEST EDGE OF ROOF OF STRUCTURE = 3.7'± EAST OF PK. TEST PIT PROBED PAST 10' (REQUESTED "D" DEPTH). NO OBSTRUCTIONS FOUND. UNABLE TO LOCATE REQUESTED TELEPHONE DUCT DUE TO GROUND WATER AND LARGE STONES UNDER CULVERT.

NOT TO SCALE

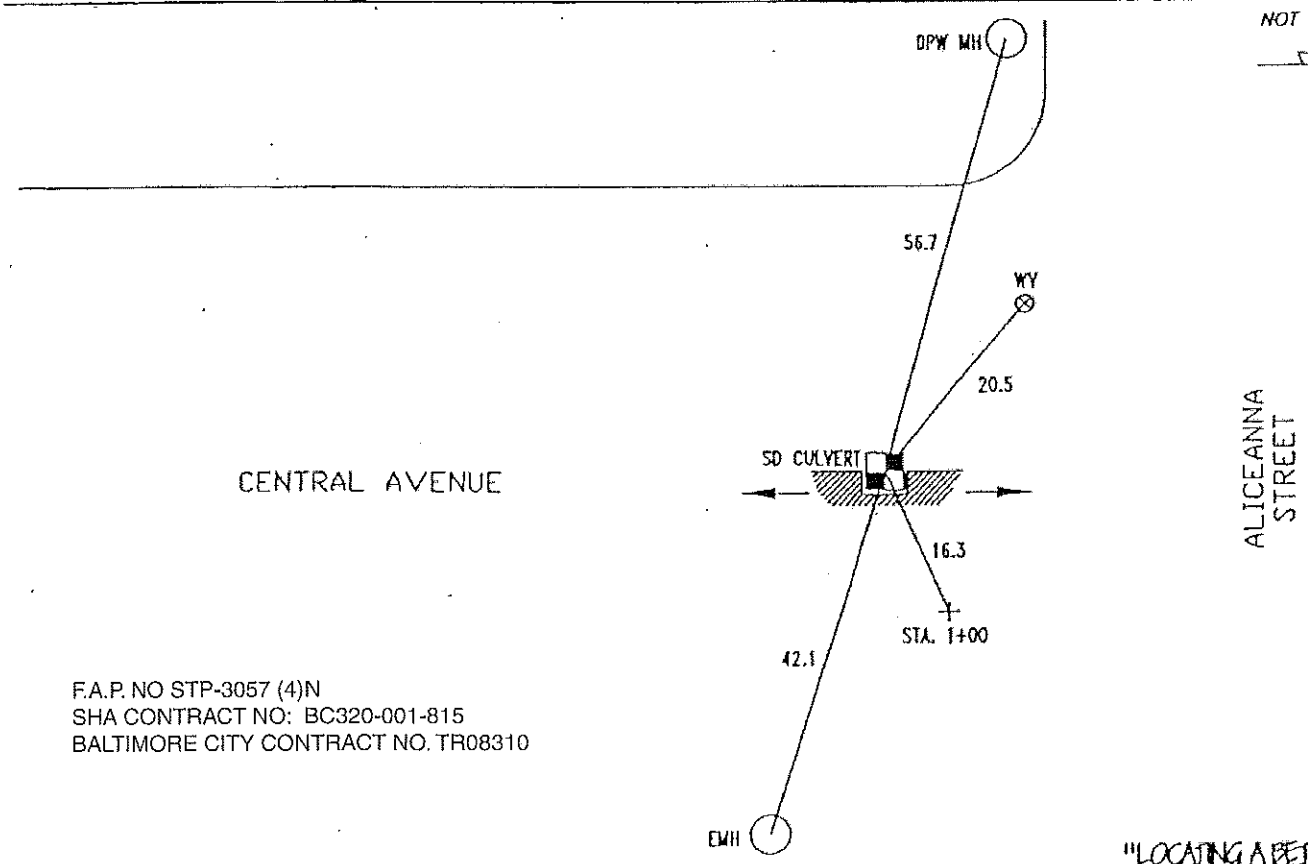

F.A.P. NO STP-3057 (4)N
SHA CONTRACT NO: BC320-001-815
BALTIMORE CITY CONTRACT NO. TR08310

"LOCATING A BETTER WAY" 1-800-LINE-11

HIS FORM DESIGN AND CONTENTS ARE PROTECTED UNDER U.S. COPYRIGHT LAW, 1994

ACCURATE LOCATING inc.

P.N.: 2000013 TEST PIT REPORT NO.: TP20

PROJECT NAME:	CENTRAL AVENUE STORM DRAIN CULVERT	CLIENT JOB #	197-42 WORK ORDER #
LOCATE REQUESTED BY:	RUMMEL, KLEPPER & KAHL, LLP	PROJECT LOCATION:	BALTIMORE CITY, MARYLAND
UTILITY REQUESTED:	STORM DRAIN CULVERT ABUTMENT	SHEET 2 OF 10	PROPOSED: UTILITY WORK
UTILITY FOUND:	STORM DRAIN CULVERT ABUTMENT	FORM BY: MB ASSISTED BY: MH	# OF HOLES: 1
MATERIAL AS FOUND:	STONE & MORTAR	PAVING CONDITION: GOOD	DATE DUG: 1-19-00
SIZE AS FOUND:	N/A	SOIL CONDITIONS:	SOFT WET CLAY ROCKY
		UTILITY CONDITION:	GOOD

INSTALLED: PK AT: EDGE OF UTILITY. MARKING TAPE: GREEN

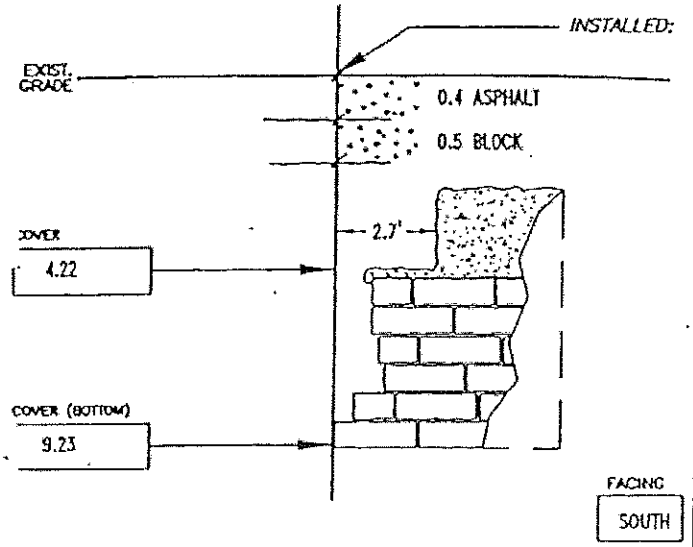

SURVEY PIN LOCATED BY: BALTIMORE CITY DPW

SURVEY INFORMATION: ALL MEASUREMENTS ON THIS FORM ARE IN ENGLISH.
NO SURVEY PROVIDED.

NOTES: PK SET OVER EAST EDGE OF CULVERT. TEST PIT ALSO REVEALED CAST IN PLACE CONCRETE ON STONE & MORTAR CULVERT. OFFSET TO EAST EDGE OF CONCRETE ≐ 2.7'± WEST OF PK. COVER = 1.51. TEST PIT PROBED PAST 12' (REQUESTED "D" DEPTH). NO OBSTRUCTIONS FOUND. BOTTOM COVER TAKEN TO DEEPEST POINT VISUALLY INSPECTED IN TEST PIT.

NOT TO SCALE

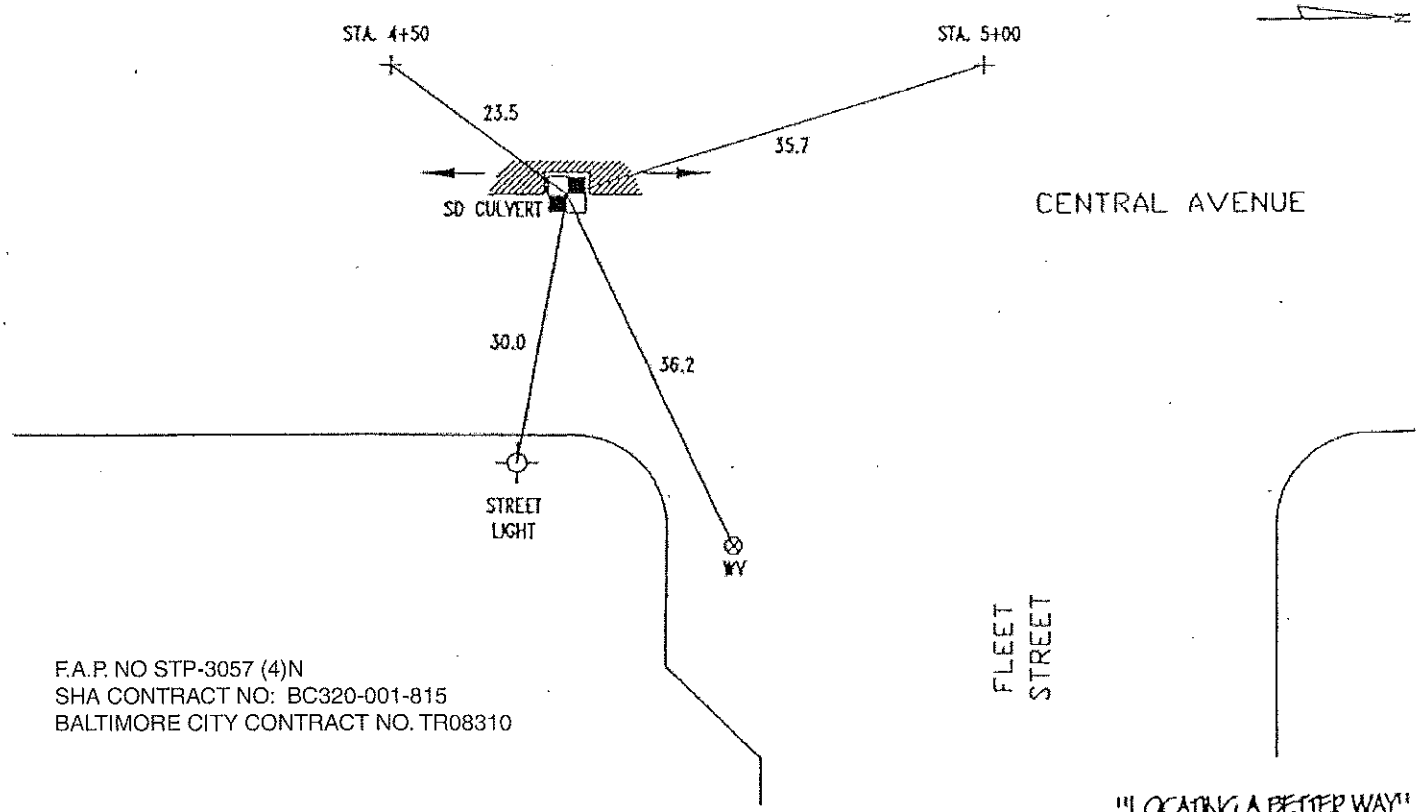

F.A.P. NO STP-3057 (4)N
SHA CONTRACT NO: BC320-001-815
BALTIMORE CITY CONTRACT NO. TR08310

"LOCATING A BETTER WAY" 1-800-UNDERIT

© FORM DESIGN AND CONTENTS ARE PROTECTED UNDER U.S. COPYRIGHT LAW, 1994

ACCURATE LOCATING inc.

P.N.: 2000013 TEST PIT REPORT NO.: TP

PROJECT NAME:	CENTRAL AVENUE STORM DRAIN CULVERT	CLIENT JOB/	197-42 WORK ORDER /
LOCATE REQUESTED BY:	RUMMEL, KLEPPER & KAHL, LLP	PROJECT LOCATION:	BALTIMORE CITY, MARYLAND
UTILITY REQUESTED:	STORM DRAIN CULVERT ABUTMENT	SHEET 4 OF 10	PROPOSED: UTILITY WORK
UTILITY FOUND:	STORM DRAIN CULVERT ABUTMENT	FORM BY: MG	ASSISTED BY: MH MG / OF HOLES: 1
MATERIAL AS FOUND:	STONE & MORTAR	PAVING CONDITION:	FAIR DATE DUG: 1-19-00
SIZE AS FOUND:	N/A	SOIL CONDITIONS:	SOFT MOIST CLAY ROCKY
		UTILITY CONDITION:	FAIR

INSTALLED: PK AT: EDGE OF UTILITY. MARKING TAPE: GREEN

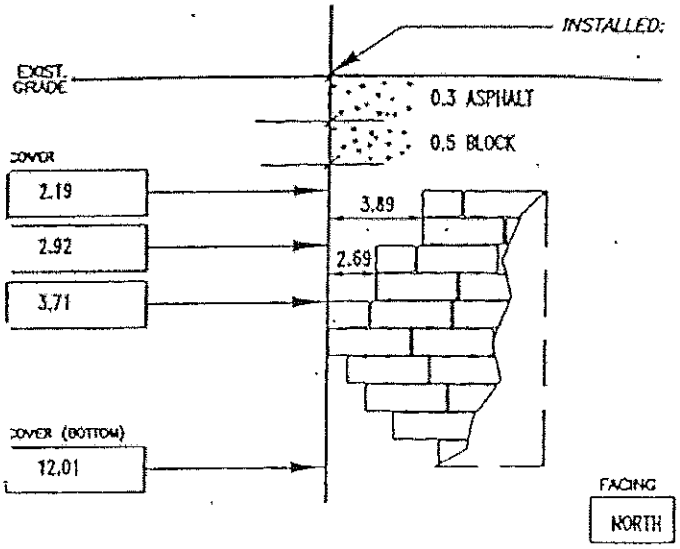

SURVEY PIN LOCATED BY: BALTIMORE CITY DPW

SURVEY INFORMATION: ALL MEASUREMENTS ON THIS FORM ARE IN ENGLISH.
NO SURVEY PROVIDED.

NOTES: PK SET OVER WEST EDGE OF CULVERT. TEST PIT REVEALED LOOSE STONE AND MOTAR CULVERT. UNABLE TO VISUALLY INSPECT BOTTOM OF CULVERT DUE TO POSSIBLY DAMAGING BOTTOM OF CULVERT. TEST PIT PROBED PAST 11' (REQUESTED "D" DEPTH). BOTTOM COVER TAKEN TO DEEPEST PROBE. NO OBSTRUCTIONS FOUND.

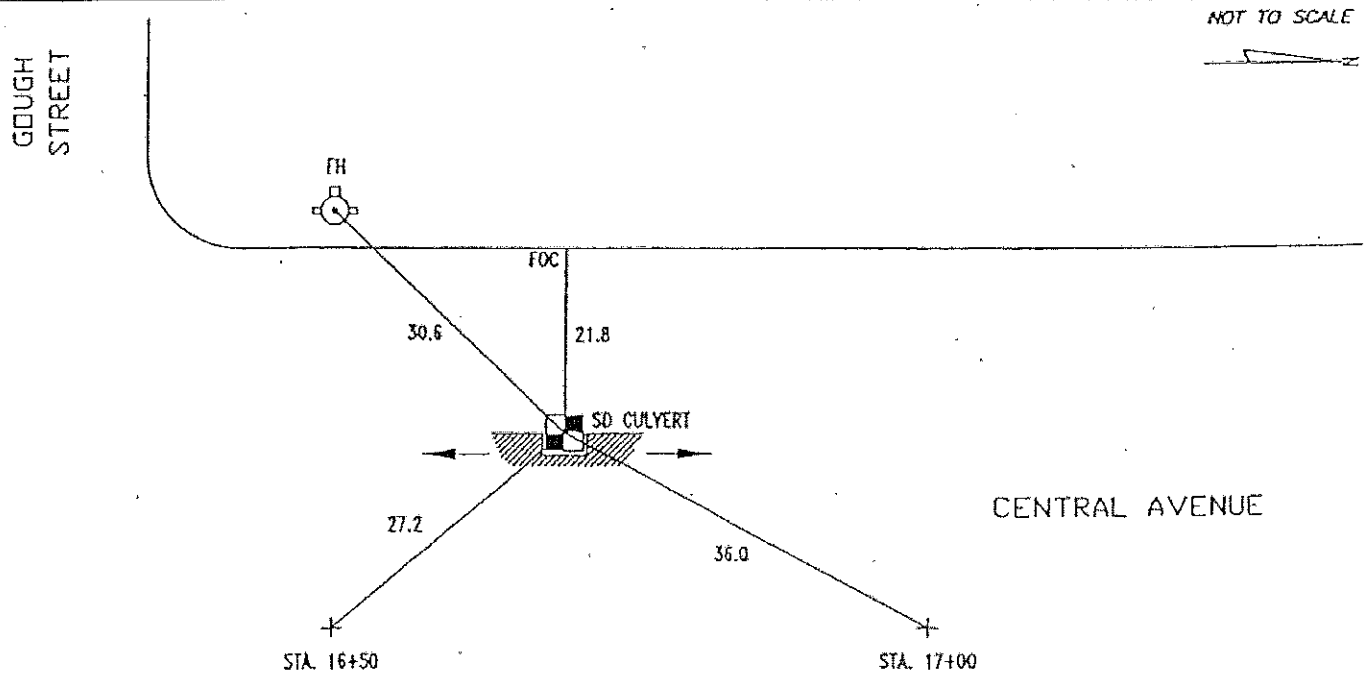

F.A.P. NO STP-3057 (4)N
SHA CONTRACT NO: BC320-001-815
BALTIMORE CITY CONTRACT NO. TR08310

"LOCATING A BETTER WAY"
1-800-UNDERGROUND

S FORM DESIGN AND CONTENTS ARE PROTECTED UNDER U.S. COPYRIGHT LAW, 1994

ACCURATE LOCATING inc.

P.N.: 2000013 TEST PIT REPORT NO.: TP2(

PROJECT NAME:	CENTRAL AVENUE STORM DRAIN CULVERT	CLIENT JOB # 197-42	WORK ORDER #
LOCATE REQUESTED BY:	RUMMEL, KLEPPER & KAHL, LLP	PROJECT LOCATION:	BALTIMORE CITY, MARYLAND
UTILITY REQUESTED:	STORM DRAIN CULVERT ABUTMENT	SHEET 4 OF 10	PROPOSED: UTILITY WORK
UTILITY FOUND:	STORM DRAIN CULVERT ABUTMENT	FORM BY: MB ASSISTED BY: MH MG	# OF HOLES: 1
MATERIAL AS FOUND:	STONE & MORTAR	PAVING CONDITION: FAIR	DATE DUG: 1-19-00
SIZE AS FOUND:	N/A	SOIL CONDITIONS: SOFT MOIST CLAY ROCKY	
		UTILITY CONDITION: FAIR	

INSTALLED: PK AT: EDGE OF UTILITY. MARKING TAPE: : GREEN

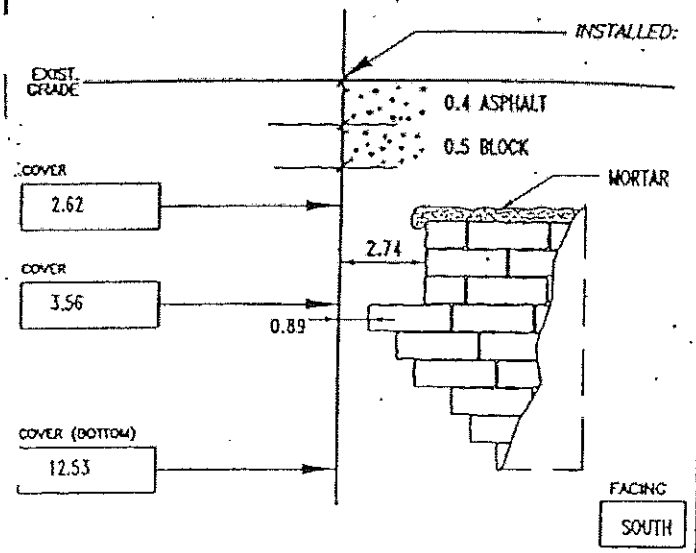

SURVEY PIN LOCATED BY: BALTIMORE CITY DPW

SURVEY INFORMATION: ALL MEASUREMENTS ON THIS FORM ARE IN ENGLISH.
NO SURVEY PROVIDED.

NOTES: PK SET OVER APPROXIMATE WEST EDGE OF CULVERT. TEST PIT REVEALED MORTAR ON TOP STONE AND MORTAR CULVERT. UNABLE TO EXCAVATE BENEATH LOWER LEDGE DUE TO POSSIBLY DAMAGING BOTTOM OF CULVERT. TEST PIT PROBED PAST 11' (REQUESTED "D" DEPTH). BOTTOM COVER TAKEN TO DEEPEST PROBE. NO OBSTRUCTIONS FOUND.

NOT TO SCALE

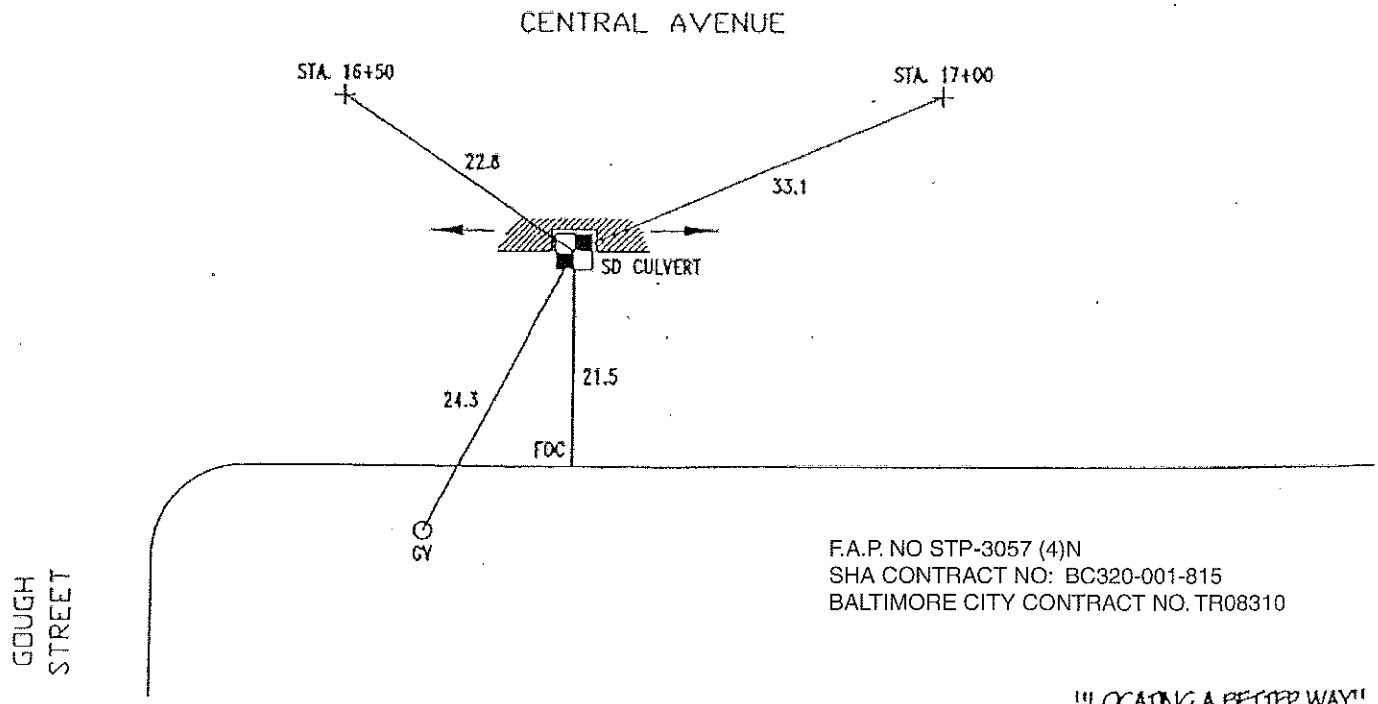

F.A.P. NO STP-3057 (4)N
SHA CONTRACT NO: BC320-001-815
BALTIMORE CITY CONTRACT NO. TR08310

IS FORM DESIGN AND CONTENTS ARE PROTECTED UNDER U.S. COPYRIGHT LAW, 1994

"LOCATING A BETTER WAY"
1-800-UNDERIT

ACCURATE LOCATING inc.

PN: 2000013 TEST PIT REPORT NO

PROJECT NAME:	CENTRAL AVENUE STORM DRAIN CULVERT	CLIENT JOB#	197-42 WORK ORDER #
LOCATE REQUESTED BY:	RUMMEL, KLEPPER & KAHL, LLP	PROJECT LOCATION:	BALTIMORE CITY, MARYLAND
UTILITY REQUESTED:	STORM DRAIN CULVERT ABUTMENT	SHEET 5 OF 10	PROPOSED: UTILITY WORK
UTILITY FOUND:	STORM DRAIN CULVERT ABUTMENT	FORM BY: MB ASSISTED BY: MH	# OF HOLES:
MATERIAL AS FOUND:	STONE & MORTAR	PAVING CONDITION: FAIR	DATE DUG: 1-22-00
SIZE AS FOUND:	N/A	SOIL CONDITIONS:	SOFT MOIST CLAY ROCKY
		UTILITY CONDITION:	FAIR

INSTALLED: PK AT: EDGE OF UTILITY. MARKING TAPE: GREEN

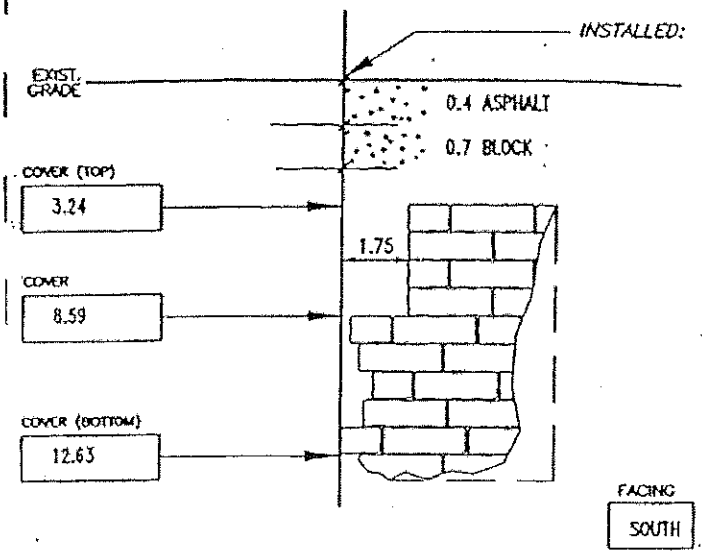

SURVEY PIN LOCATED BY: BALTIMORE CITY DPW

SURVEY INFORMATION: ALL MEASUREMENTS ON THIS FORM ARE IN ENGLISH.
NO SURVEY PROVIDED.

NOTES: PK SET OVER APPROXIMATE EAST EDGE OF CULVERT. TEST PIT PROBED PAST 12.5' (REQUESTED "D" DEPTH). BOTTOM COVER TAKEN TO DEEPEST PROBE. NO OBSTRUCTIONS FOUND.

NOT TO SCALE

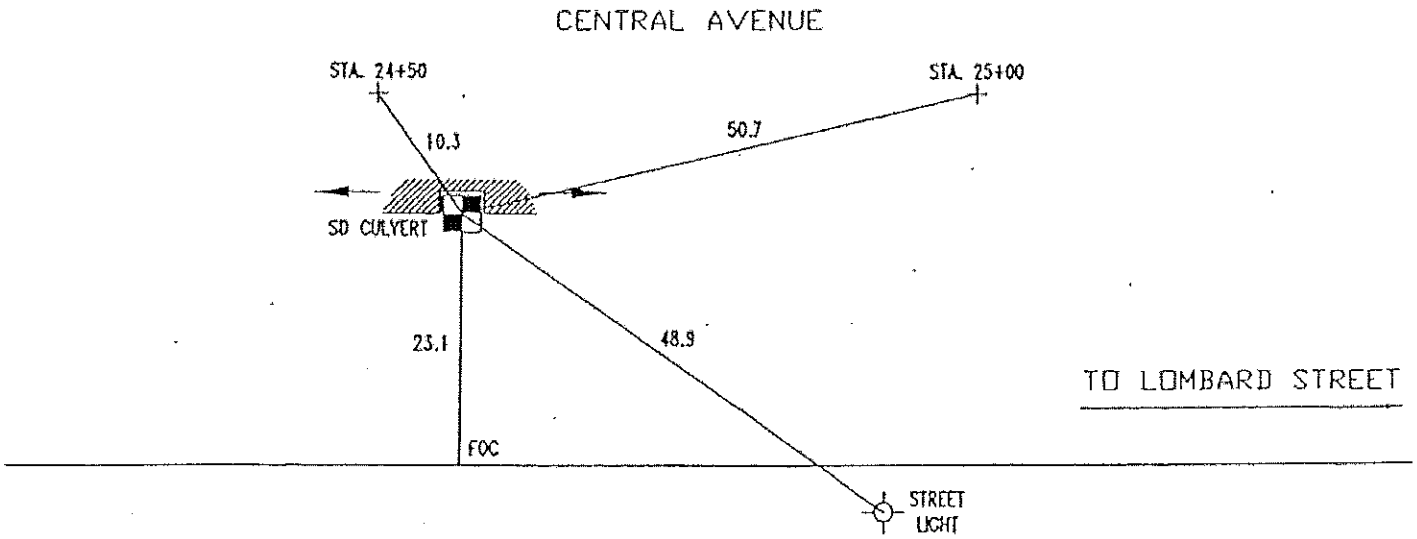

F.A.P. NO STP-3057 (4)N
SHA CONTRACT NO: BC320-001-815
BALTIMORE CITY CONTRACT NO. TR08310

THIS FORM DESIGN AND CONTENTS ARE PROTECTED UNDER U.S. COPYRIGHT LAW, 1994

"LOCATING A BETTER WAY" 1-800-UNDER IT

ACCURATE LOCATING inc.

PN: 2000013 TEST PIT REPORT NO.: TP

PROJECT NAME:	CENTRAL AVENUE STORM DRAIN CULVERT	CLIENT JOB#	197-42 WORK ORDER #
LOCATE REQUESTED BY:	RUMMEL, KLEPPER & KAHL, LLP	PROJECT LOCATION:	BALTIMORE CITY, MARYLAND
UTILITY REQUESTED:	STORM DRAIN CULVERT ABUTMENT	SHEET 5 OF 10	PROPOSED: UTILITY WORK
UTILITY FOUND:	STORM DRAIN CULVERT ABUTMENT	FORM BY: MB	ASSISTED BY: MH SW # OF HOLES: 1
MATERIAL AS FOUND:	STONE & MORTAR	PAVING CONDITION:	FAIR DATE DUG: 1-22-00
SIZE AS FOUND:	N/A	SOIL CONDITIONS:	SOFT MOIST CLAY ROCKY
		UTILITY CONDITION:	FAIR

INSTALLED: PK AT: EDGE OF UTILITY. MARKING TAPE: - GREEN

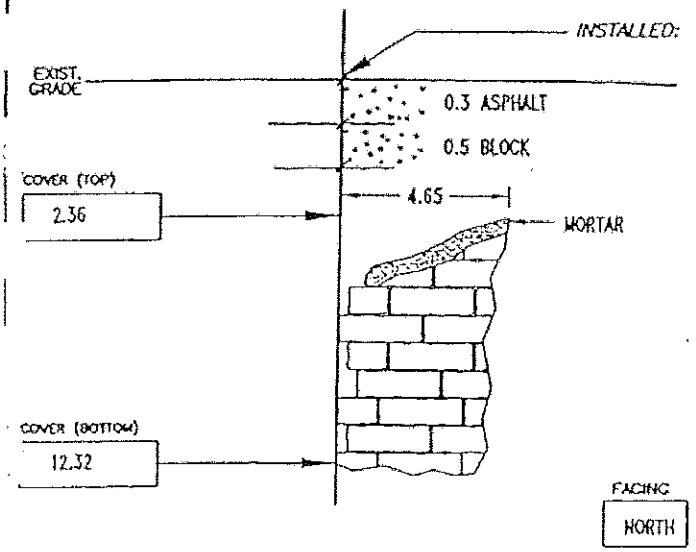

SURVEY PIN LOCATED BY: BALTIMORE CITY DPW

SURVEY INFORMATION: ALL MEASUREMENTS ON THIS FORM ARE IN ENGLISH.
NO SURVEY PROVIDED.

NOTES: PK SET OVER APPROXIMATE WEST EDGE OF CULVERT. TEST PIT REVEALED MORTAR ON TOP OF CULVERT. TOP COVER TAKEN TO HIGHEST POINT INSPECTED IN TEST PIT. OFFSET = 4.65±. TEST PIT PROBED PAST 11.0' (REQUESTED "D" DEPTH). BOTTOM COVER TAKEN TO DEEPEST PROBE. NO OBSTRUCTIONS FOUND.

NOT TO SCALE

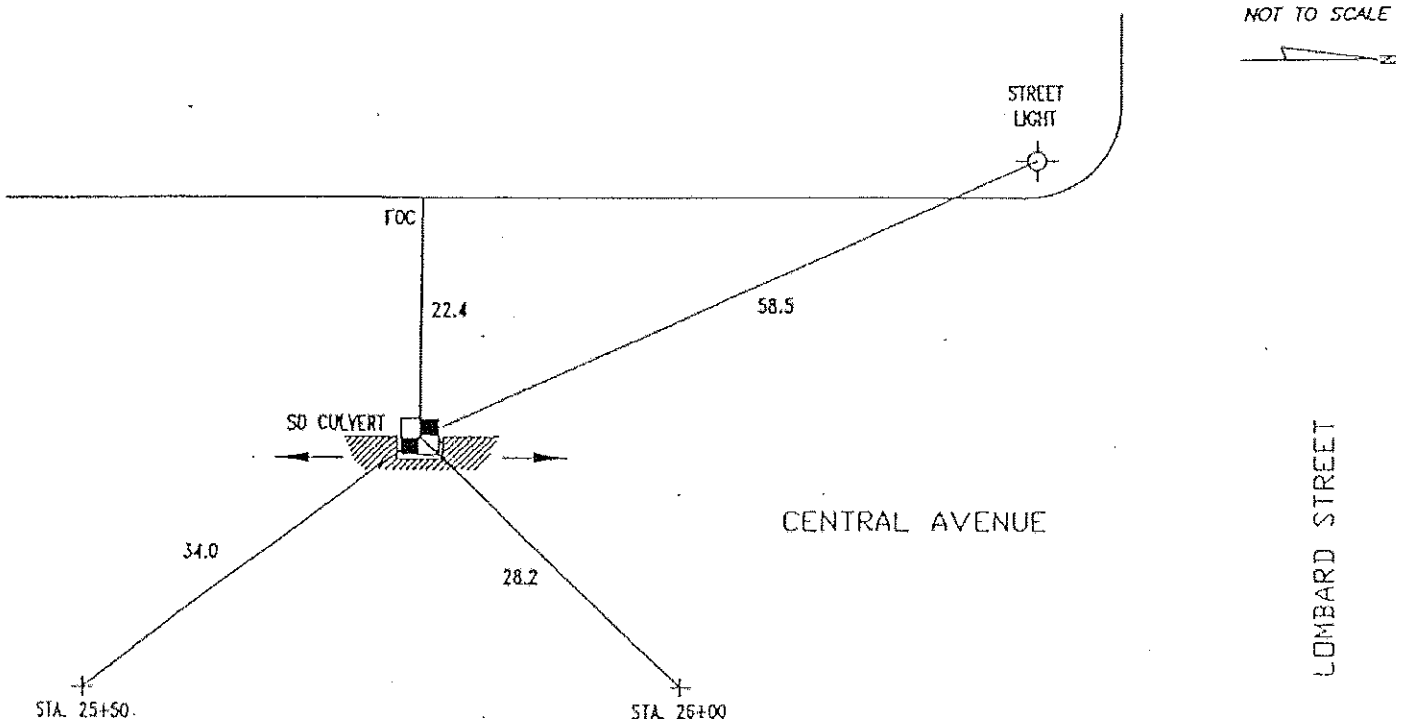

F.A.P. NO STP-3057 (4)N
SHA CONTRACT NO: BC320-001-815
BALTIMORE CITY CONTRACT NO. TR08310

THIS FORM DESIGN AND CONTENTS ARE PROTECTED UNDER U.S. COPYRIGHT LAW, 1994

"LOCATING A BETTER WAY" 1-800-UNDERIT

ACCURATE LOCATING inc.

PN: 2000013 TEST PIT REPORT NO.: 11

PROJECT NAME:	CENTRAL AVENUE STORM DRAIN CULVERT	CLIENT JOB #	197-42 WORK ORDER #
LOCATE REQUESTED BY:	RUMMEL, KLEPPER & KAHL, LLP	PROJECT LOCATION:	BALTIMORE CITY, MARYLAND
UTILITY REQUESTED:	STORM DRAIN CULVERT ABUTMENT	SHEET 8 OF 10	PROPOSED: UTILITY WORK
UTILITY FOUND:	STORM DRAIN CULVERT	FORM BY: MB	ASSISTED BY: MH SW # OF HOLES: 1
MATERIAL AS FOUND:	STONE & MORTAR	PAVING CONDITION: FAIR	DATE DUG: 1-22-00
SIZE AS FOUND:	N/A	SOIL CONDITIONS:	SOFT MOIST CLAY ROCKY
		UTILITY CONDITION:	SEE NOTE

INSTALLED: PK AT: TOP OF UTILITY. MARKING TAPE: GREEN

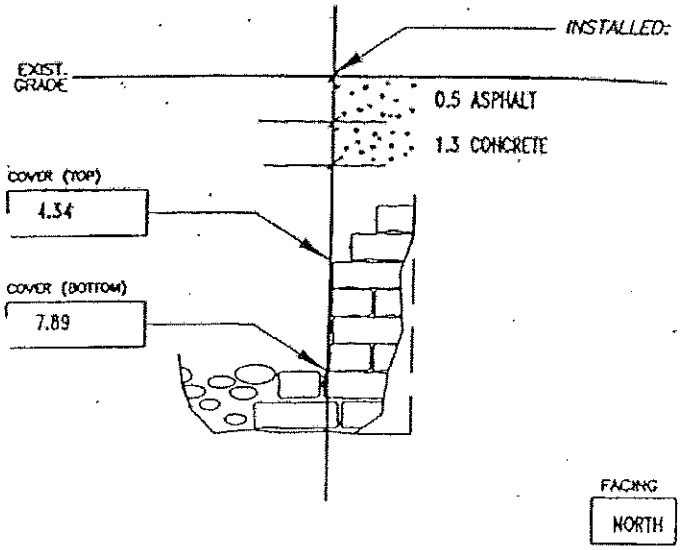

SURVEY PIN LOCATED BY: BALTIMORE CITY DPW

SURVEY INFORMATION: ALL MEASUREMENTS ON THIS FORM ARE IN ENGLISH. NO SURVEY PROVIDED.

NOTES: UNABLE TO OBTAIN REQUESTED EDGE DUE TO ROCKY CONDITIONS AND LOOSE STONE THAT IS BELIEVED TO BE THE CULVERT. PK SET OVER WHERE STONE APPEARS TO RISE TOWARDS CENTERLINE. UNABLE TO PROBE TO 12.5' (REQUESTED "D" DEPTH) DUE TO ROCKS AND STONE ENCOUNTERED IN TEST PIT. BOTTOM COVER TAKEN TO DEEPEST PROBE.

NOT TO SCALE

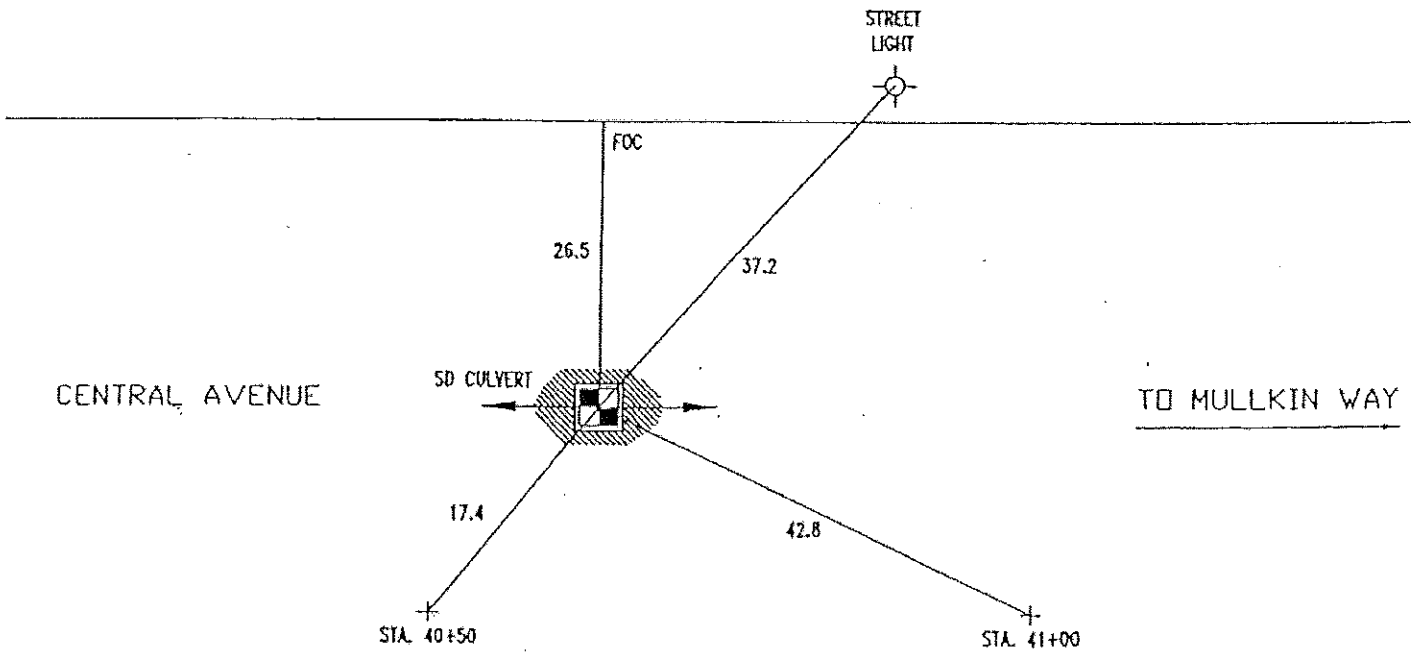

F.A.P. NO STP-3057 (4)N
SHA CONTRACT NO: BC320-001-815
BALTIMORE CITY CONTRACT NO. TR08310

© FORM DESIGN AND CONTENTS ARE PROTECTED UNDER U.S. COPYRIGHT LAW, 1994

"LOCATING A BETTER WAY" 1-800-UNDERII

ACCURATE LOCATING inc.

PN: 2000013

TEST PIT REPORT NO.: TP21

PROJECT NAME:	CENTRAL AVENUE STORM DRAIN CULVERT	CLIENT JOB #	197-42 WORK ORDER #
LOCATE REQUESTED BY:	RUMMEL, KLEPPER & KAHL, LLP	PROJECT LOCATION:	BALTIMORE CITY, MARYLAND
UTILITY REQUESTED:	STORM DRAIN CULVERT ABUTMENT	SHEET 8 OF 10	PROPOSED: UTILITY WORK
UTILITY FOUND:	STORM DRAIN CULVERT	FORM BY: MB ASSISTED BY: MH, SW	# OF HOLES: 1
MATERIAL AS FOUND:	STONE	PAVING CONDITION: FAIR	DATE DUG: 1-22-00
SIZE AS FOUND:	N/A	SOIL CONDITIONS:	SOFT MOIST CLAY ROCKY.
		UTILITY CONDITION:	SEE NOTE

INSTALLED: STEEL PIN AT: EDGE OF UTILITY. MARKING TAPE: GREEN

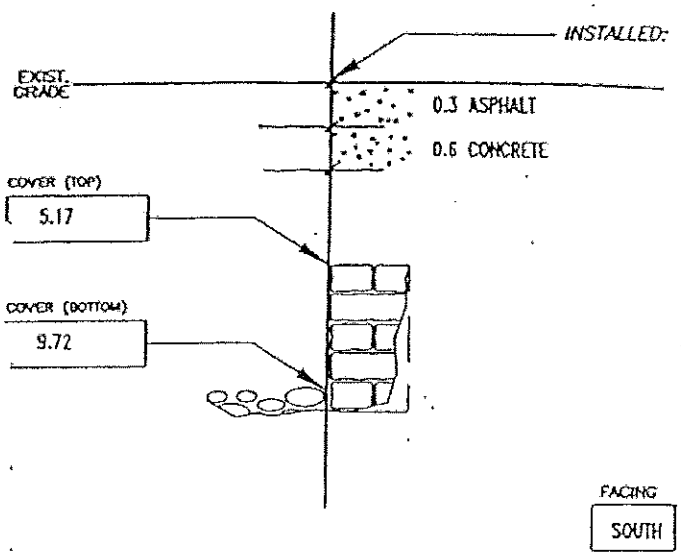

SURVEY PIN LOCATED BY: BALTIMORE CITY DPW

SURVEY INFORMATION: ALL MEASUREMENTS ON THIS FORM ARE IN ENGLISH.
NO SURVEY PROVIDED.

NOTES: PK SET OVER EAST EDGE OF CULVERT. TEST PIT REVEALED CULVERT IN POOR CONDITION. NO MORTAR HOLDING STONES TOGETHER. UNABLE TO PROBE TO 12.5' (REQUESTED "D" DEPTH) DUE TO LARGE STONE ENCOUNTERED IN BOTTOM OF TEST PIT. BOTTOM COVER TAKEN TO DEEPEST PROBE.

NOT TO SCALE

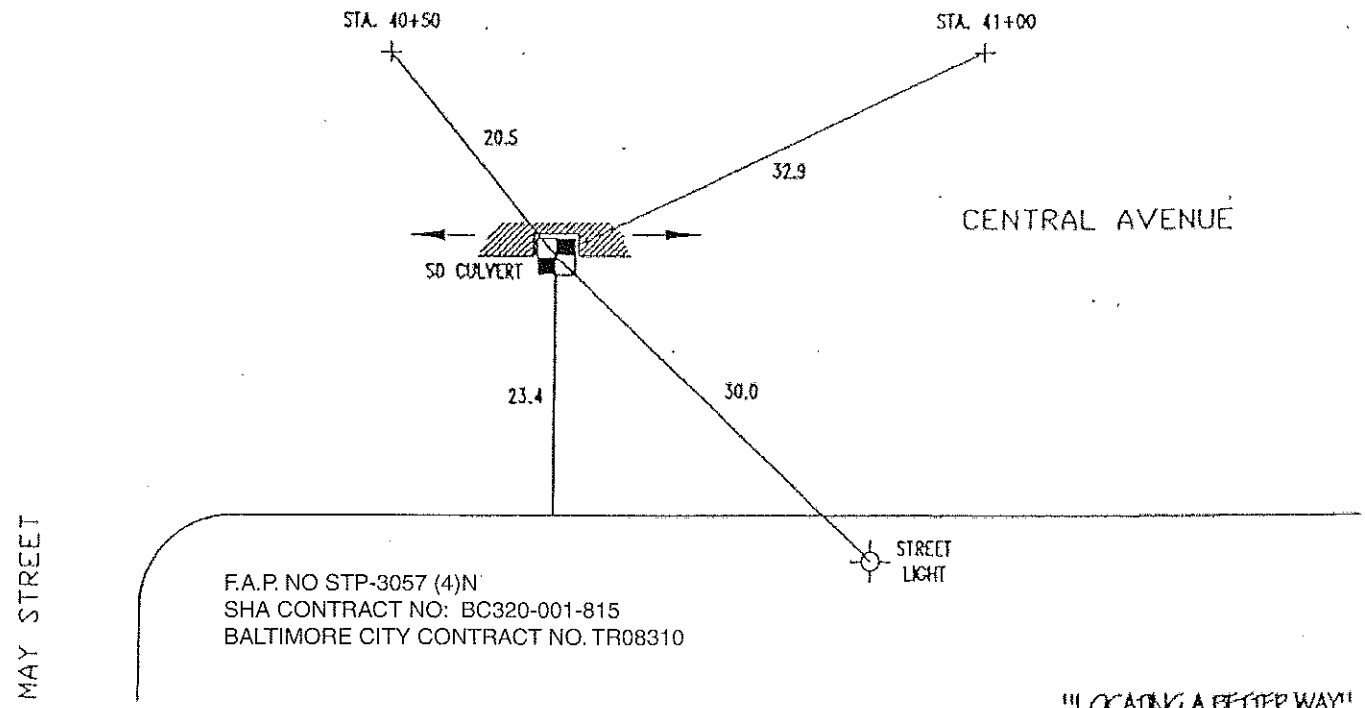

F.A.P. NO STP-3057 (4)N
SHA CONTRACT NO: BC320-001-815
BALTIMORE CITY CONTRACT NO. TR08310

"LOCATING A BETTER WAY"
1-800-UNDERG

FORM DESIGN AND CONTENTS ARE PROTECTED UNDER U.S. COPYRIGHT LAW, 1994

ACCURATE LOCATING inc.

2000013 TEST PIT REPORT NO.: TP:

PROJECT NAME:	CENTRAL AVENUE STORM DRAIN CULVERT	CLIENT JOB#	197-42 WORK ORDER #
OCATE REQUESTED BY:	RUMMEL, KLEPPER & KAHL, LLP	PROJECT LOCATION:	BALTIMORE CITY, MARYLAND
UTILITY REQUESTED:	STORM DRAIN CULVERT ABUTMENT & TELE DUCT	SHEET 1 OF 10	PROPOSED: UTILITY WORK
TILITY FOUND:	STORM DRAIN CULVERT ABUTMENT	FORM BY: MB	ASSISTED BY: BH # OF HOLES: 1
MATERIAL AS FOUND:	STONE & MORTAR	PAVING CONDITION:	FAIR DATE DUG: 1-18-00
IZE AS FOUND:	N/A	SOIL CONDITIONS:	SOFT WET MOIST CLAY ROCKY
		UTILITY CONDITION:	FAIR

INSTALLED: PK AT: EDGE OF UTILITY. MARKING TAPE: PINK

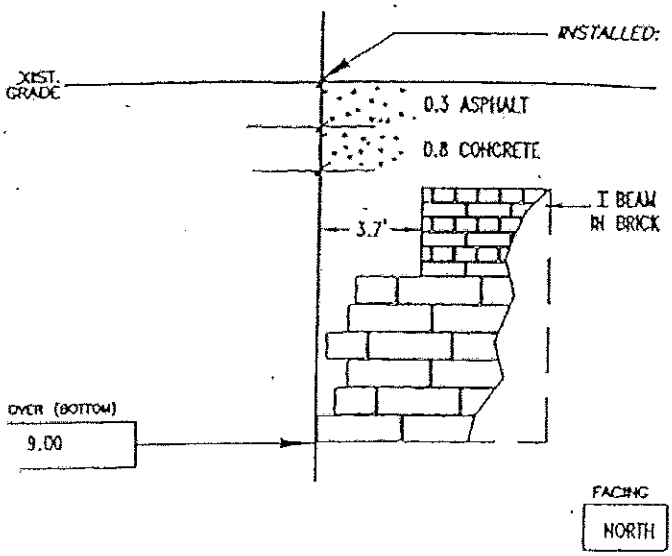

SURVEY PIN LOCATED BY: BALTIMORE CITY DPW

SURVEY INFORMATION: ALL MEASUREMENTS ON THIS FORM ARE IN ENGLISH.
NO SURVEY PROVIDED.

NOTES: PK SET OVER WEST EDGE OF CULVERT. OFFSET TO WEST EDGE OF ROOF OF STRUCTURE = 3.7'± EAST OF PK. TEST PIT PROBED PAST 10' (REQUESTED "D" DEPTH). NO OBSTRUCTIONS FOUND. UNABLE TO LOCATE REQUESTED TELEPHONE DUCT DUE TO GROUND WATER AND LARGE STONES UNDER CULVERT.

NOT TO SCALE

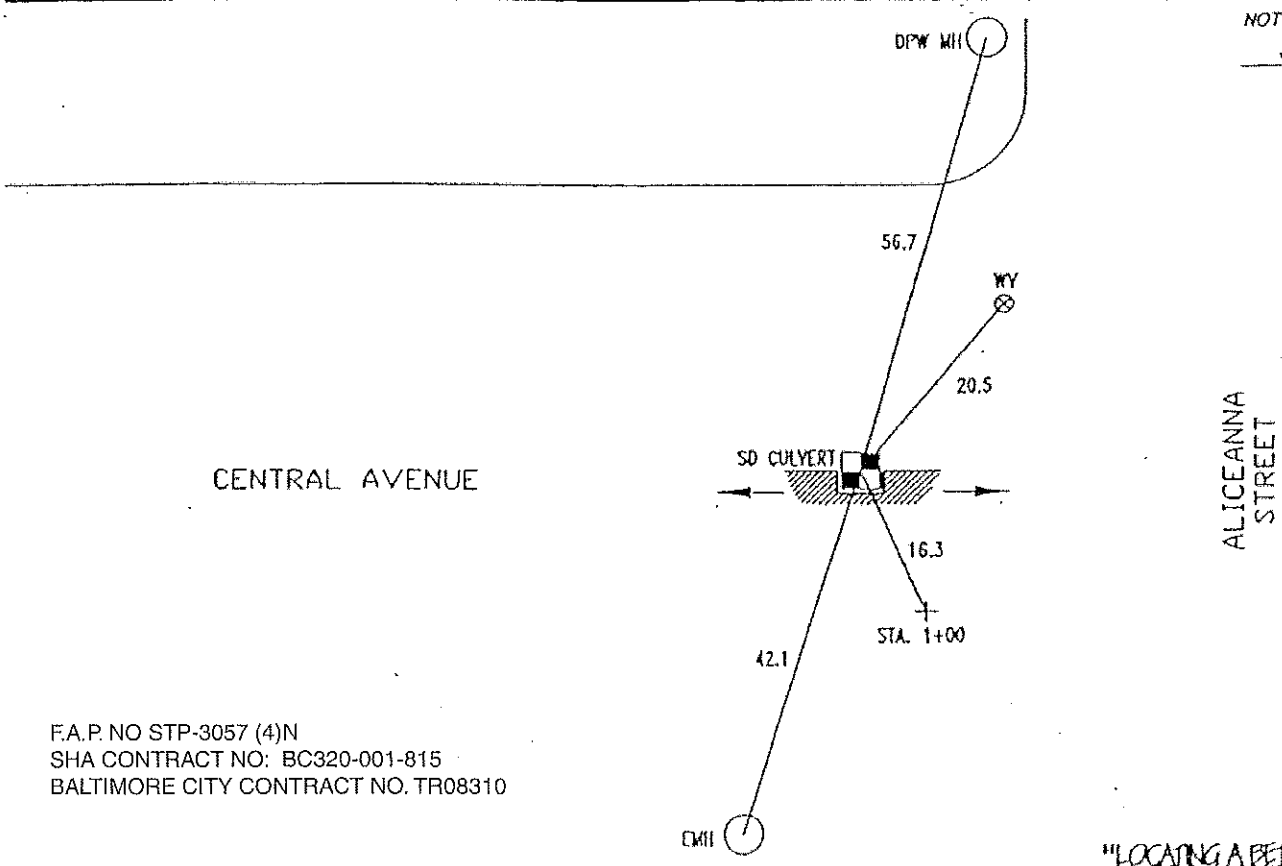

F.A.P. NO STP-3057 (4)N
SHA CONTRACT NO: BC320-001-815
BALTIMORE CITY CONTRACT NO. TR08310

FORM DESIGN AND CONTENTS ARE PROTECTED UNDER U.S. COPYRIGHT LAW, 1994

"LOCATING A BETTER WAY"
1-800-UNDERIT

ACCURATE LOCATING inc.

2000015

TEST PIT REPORT NO.: TP204

PROJECT NAME:	CENTRAL AVENUE STORM DRAIN CULVERT	CLIENT JOB #	197-42 WORK ORDER #
LOCATE REQUESTED BY:	RUMMEL, KLEPPER & KAHL, LLP	PROJECT LOCATION:	BALTIMORE CITY, MARYLAND
UTILITY REQUESTED:	STORM DRAIN CULVERT ABUTMENT	SHEET 2 OF 10	PROPOSED: UTILITY WORK
UTILITY FOUND:	STORM DRAIN CULVERT ABUTMENT	FORM BY: MB ASSISTED BY: MH	# OF HOLES: 1
MATERIAL AS FOUND:	STONE & MORTAR	PAVING CONDITION: GOOD	DATE DUG: 1-19-00
SIZE AS FOUND:	N/A	SOIL CONDITIONS: SOFT WET CLAY ROCKY	
		UTILITY CONDITION: GOOD	

INSTALLED: PK AT: EDGE OF UTILITY. MARKING TAPE: GREEN

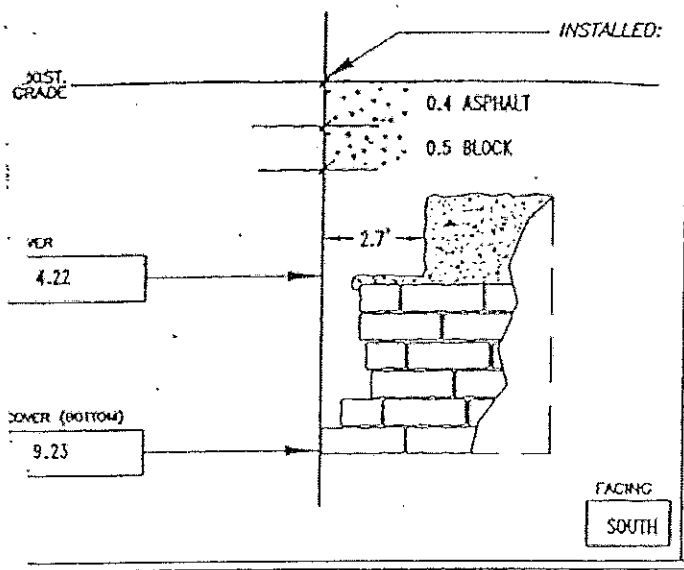

SURVEY PIN LOCATED BY: BALTIMORE CITY DPW

SURVEY INFORMATION: ALL MEASUREMENTS ON THIS FORM ARE IN ENGLISH.
NO SURVEY PROVIDED.

NOTES: PK SET OVER EAST EDGE OF CULVERT. TEST PIT ALSO REVEALED CAST IN PLACE CONCRETE ON STONE & MORTAR CULVERT. OFFSET TO EAST EDGE OF CONCRETE = 2.7'± WEST OF PK. COVER = 1.51. TEST PIT PROBED PAST 12' (REQUESTED "D" DEPTH). NO OBSTRUCTIONS FOUND. BOTTOM COVER TAKEN TO DEEPEST POINT VISUALLY INSPECTED IN TEST PIT.

NOT TO SCALE

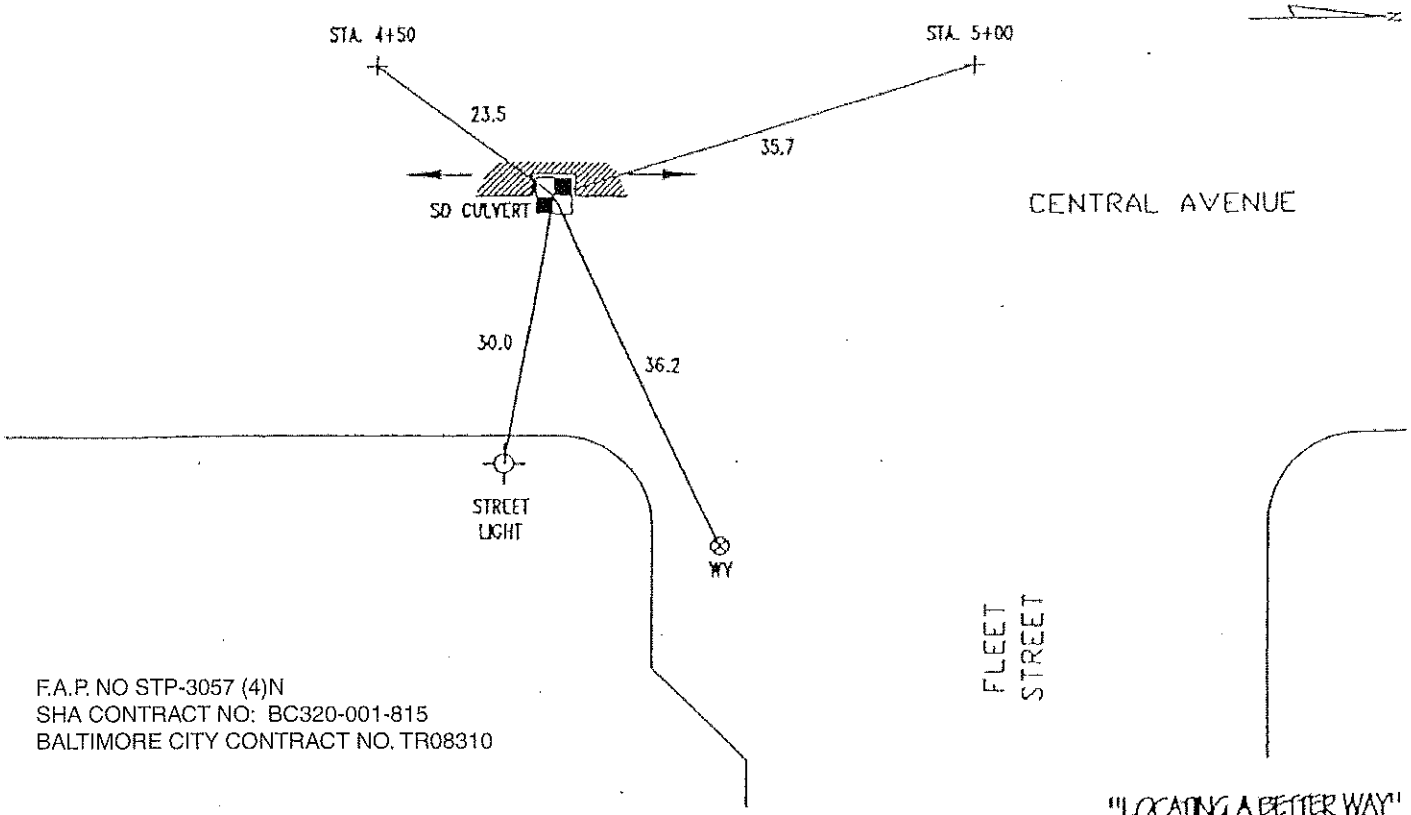

F.A.P. NO STP-3057 (4)N
SHA CONTRACT NO: BC320-001-815
BALTIMORE CITY CONTRACT NO. TR08310

"LOCATING A BETTER WAY"
1-800-UNDERIT

FORM DESIGN AND CONTENTS ARE PROTECTED UNDER U.S. COPYRIGHT LAW, 1994

ACCURATE LOCATING inc.

P.O. 2000013 TEST PIT REPORT NO.: TP205

PROJECT NAME:	CENTRAL AVENUE STORM DRAIN CULVERT	CLIENT JOB #	197-42 WORK ORDER #
LOCATE REQUESTED BY:	RUMMEL, KLEPPER & KAHL, LLP	PROJECT LOCATION:	BALTIMORE CITY, MARYLAND
UTILITY REQUESTED:	STORM DRAIN CULVERT ABUTMENT	SHEET 4 OF 10	PROPOSED: UTILITY WORK
UTILITY FOUND:	STORM DRAIN CULVERT ABUTMENT	FORM BY: MB ASSISTED BY: MH MG	# OF HOLES: 1
MATERIAL AS FOUND:	STONE & MORTAR	PAVING CONDITION: FAIR	DATE DUG: 1-19-00
SIZE AS FOUND:	N/A	SOIL CONDITIONS:	SOFT MOIST CLAY ROCKY
		UTILITY CONDITION:	FAIR

INSTALLED: PK AT: EDGE OF UTILITY. MARKING TAPE: GREEN

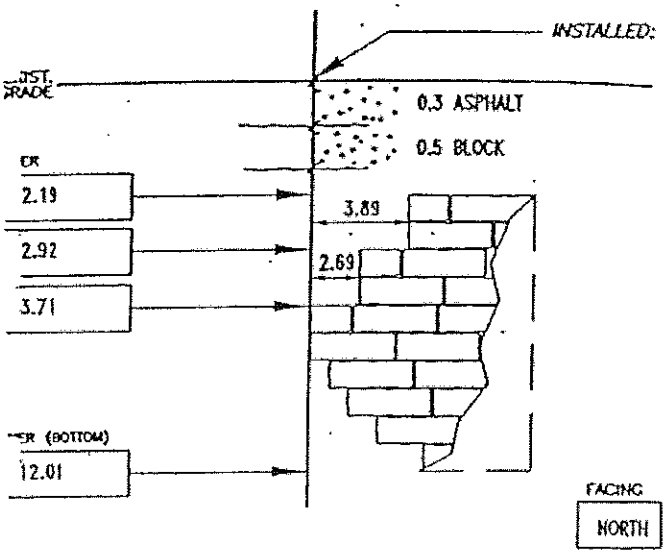

SURVEY PIN LOCATED BY: BALTIMORE CITY DPW

SURVEY INFORMATION: ALL MEASUREMENTS ON THIS FORM ARE IN ENGLISH.
NO SURVEY PROVIDED.

NOTES: PK SET OVER WEST EDGE OF CULVERT. TEST PIT REVEALED LOOSE STONE AND MOTAR CULVERT. UNABLE TO VISUALLY INSPECT BOTTOM OF CULVERT DUE TO POSSIBLY DAMAGING BOTTOM OF CULVERT. TEST PIT PROBED PAST 11' (REQUESTED "D" DEPTH). BOTTOM COVER TAKEN TO DEEPEST PROBE. NO OBSTRUCTIONS FOUND.

NOT TO SCALE

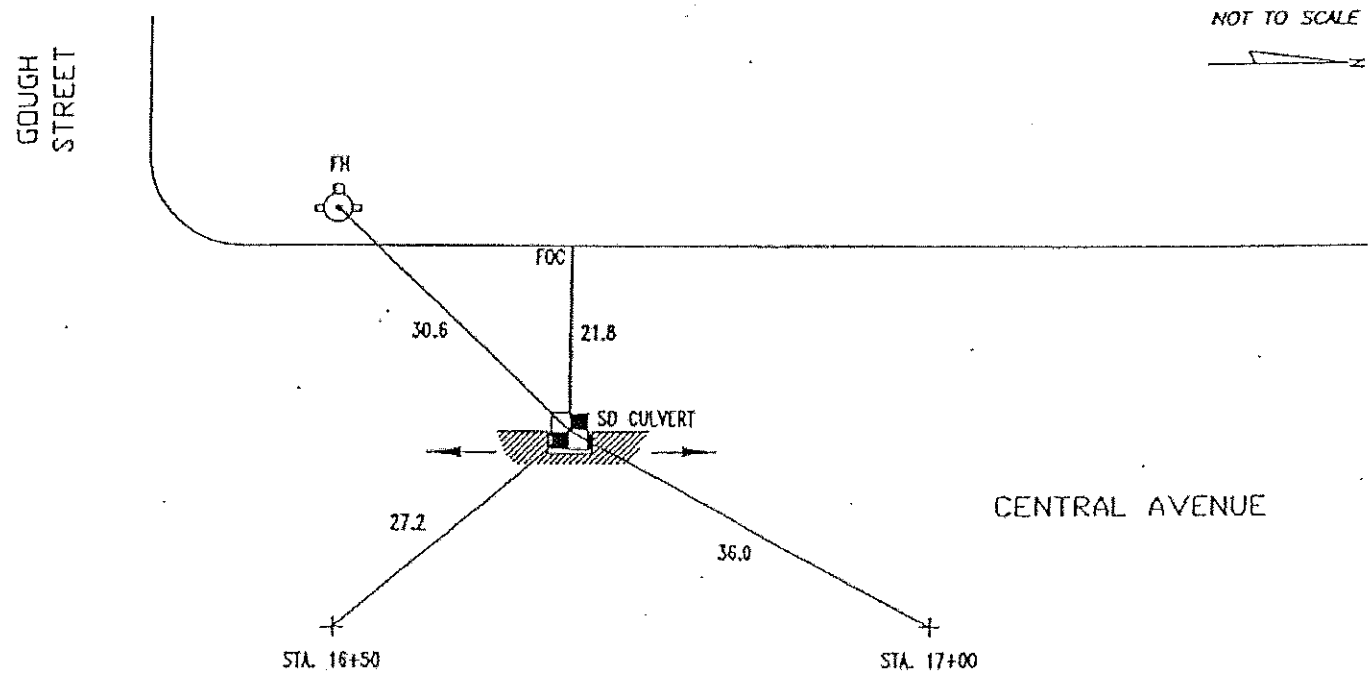

F.A.P. NO STP-3057 (4)N
SHA CONTRACT NO: BC320-001-815
BALTIMORE CITY CONTRACT NO. TR08310

FORM DESIGN AND CONTENTS ARE PROTECTED UNDER U.S. COPYRIGHT LAW, 1994

"LOCATING A BETTER WAY" 1-800-UNDERIT

ACCURATE LOCATING inc.

2000013 TEST PIT REPORT NO.: TP206

PROJECT NAME:	CENTRAL AVENUE STORM DRAIN CULVERT	CLIENT JOB/	197-42 WORK ORDER /
DCATE REQUESTED BY:	RUMMEL, KLEPPER & KAHL, LLP	PROJECT LOCATION:	BALTIMORE CITY, MARYLAND
UTILITY REQUESTED:	STORM DRAIN CULVERT ABUTMENT	SHEET 4 OF 10	PROPOSED: UTILITY WORK
TILITY FOUND:	STORM DRAIN CULVERT ABUTMENT	FORM BY: MB ASSISTED BY:	MH MG / OF HOLES: 1
MATERIAL AS FOUND:	STONE & MORTAR	PAVING CONDITION:	FAIR DATE DUG: 1-19-00
ZE AS FOUND:	N/A	SOIL CONDITIONS:	SOFT MOIST CLAY ROCKY
		UTILITY CONDITION:	FAIR

INSTALLED: PK AT: EDGE OF UTILITY. MARKING TAPE: GREEN

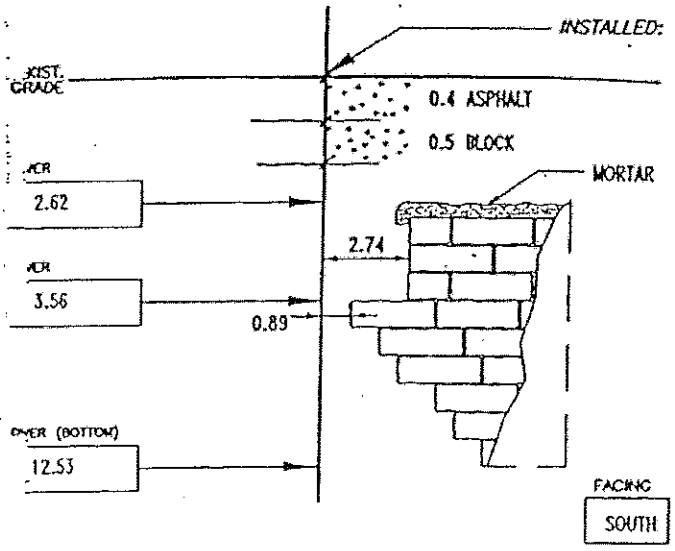

SURVEY PIN LOCATED BY: BALTIMORE CITY DPW

SURVEY INFORMATION: ALL MEASUREMENTS ON THIS FORM ARE IN ENGLISH.
NO SURVEY PROVIDED.

NOTES: PK SET OVER APPROXIMATE WEST EDGE OF CULVERT. TEST PIT REVEALED MORTAR ON TOP STONE AND MORTAR CULVERT. UNABLE TO EXCAVATE BENEATH LOWER LEDGE DUE TO POSSIBLY DAMAGING BOTTOM OF CULVERT. TEST PIT PROBED PAST 11' (REQUESTED "D" DEPTH). BOTTOM COVER TAKEN TO DEEPEST PROBE. NO OBSTRUCTIONS FOUND.

NOT TO SCALE

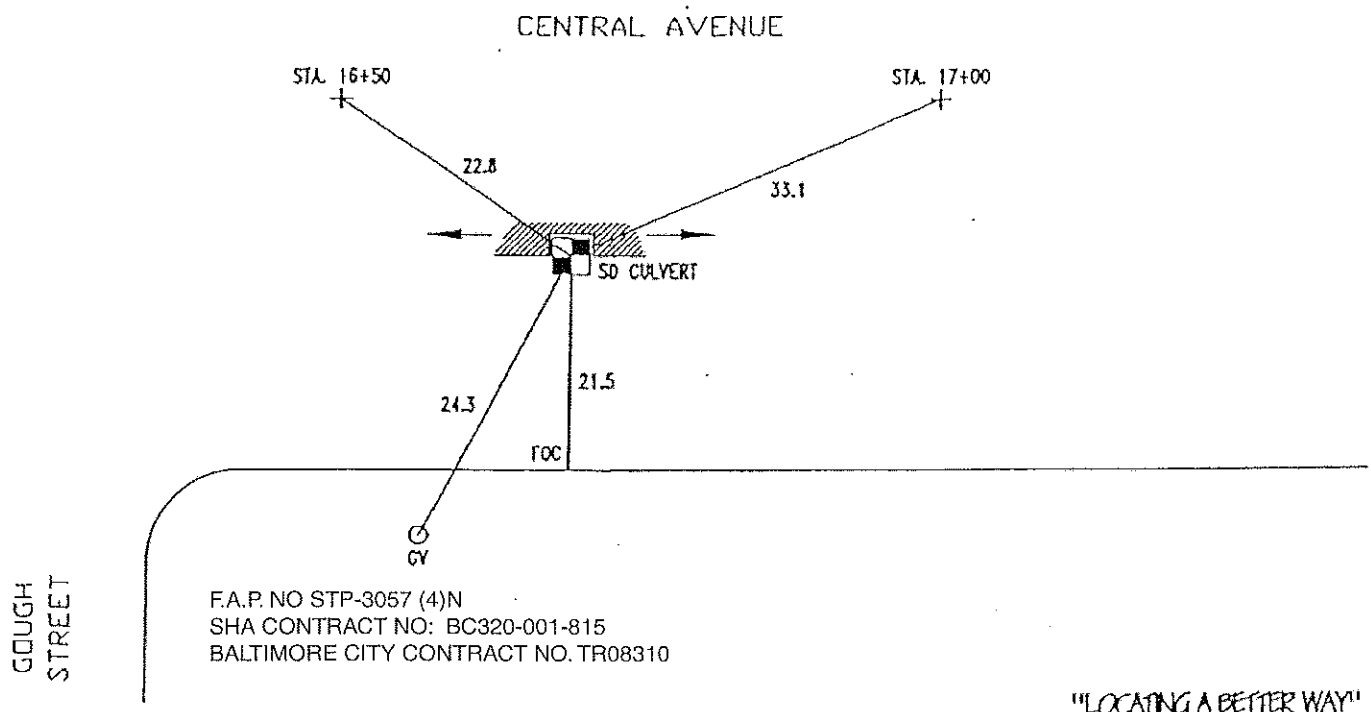

F.A.P. NO STP-3057 (4)N
SHA CONTRACT NO: BC320-001-815
BALTIMORE CITY CONTRACT NO. TR08310

"LOCATING A BETTER WAY"
1-800-UNDERIT

FORM DESIGN AND CONTENTS ARE PROTECTED UNDER U.S. COPYRIGHT LAW, 1994

ACCURATE LOCATING inc.

-2000013 TEST PIT REPORT NO.: TP208

PROJECT NAME:	CENTRAL AVENUE STORM DRAIN CULVERT	CLIENT JOB #	197-42 WORK ORDER #
LOCATE REQUESTED BY:	RUMMEL, KLEPPER & KAHL, LLP	PROJECT LOCATION:	BALTIMORE CITY, MARYLAND
UTILITY REQUESTED:	STORM DRAIN CULVERT ABUTMENT	SHEET 5 OF 10	PROPOSED: UTILITY WORK
UTILITY FOUND:	STORM DRAIN CULVERT ABUTMENT	FORM BY: MB ASSISTED BY: MH	# OF HOLES: 1
MATERIAL AS FOUND:	STONE & MORTAR	PAVING CONDITION: FAIR	DATE DUG: 1-22-00
SIZE AS FOUND:	N/A	SOIL CONDITIONS:	SOFT MOIST CLAY ROCKY
		UTILITY CONDITION:	FAIR

INSTALLED: PK AT: EDGE OF UTILITY. MARKING TAPE: GREEN

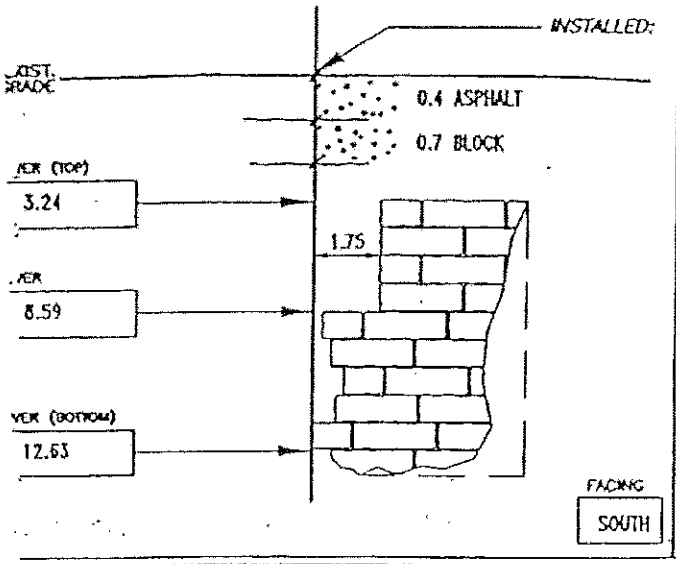

SURVEY PIN LOCATED BY: BALTIMORE CITY DPW

SURVEY INFORMATION: ALL MEASUREMENTS ON THIS FORM ARE IN ENGLISH. NO SURVEY PROVIDED.

NOTES: PK SET OVER APPROXIMATE EAST EDGE OF CULVERT. TEST PIT PROBED PAST 12.5' (REQUESTED "0" DEPTH). BOTTOM COVER TAKEN TO DEEPEST PROBE. NO OBSTRUCTIONS FOUND.

NOT TO SCALE

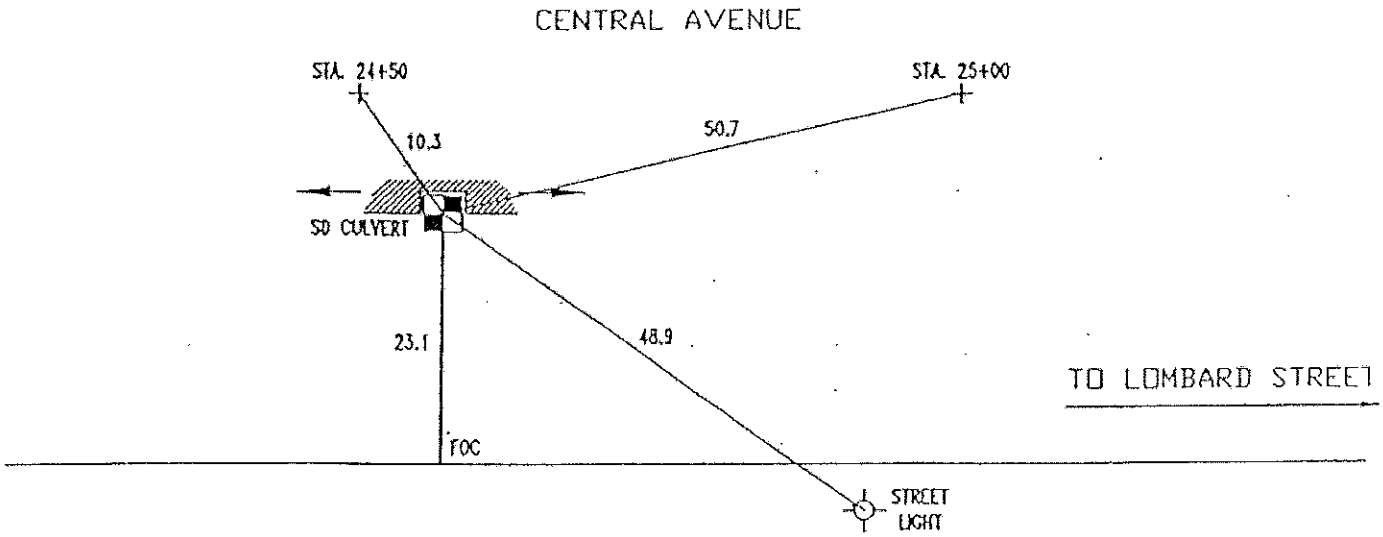

F.A.P. NO STP-3057 (4)N
SHA CONTRACT NO: BC320-001-815
BALTIMORE CITY CONTRACT NO. TR08310

FORM DESIGN AND CONTENTS ARE PROTECTED UNDER U.S. COPYRIGHT LAW, 1994

"LOCATING A BETTER WA. 1-800-UNDER IT"

ACCURATE LOCATING inc.

2000013 TEST PIT REPORT NO.: TP209

PROJECT NAME:	CENTRAL AVENUE STORM DRAIN CULVERT	CLIENT JOB#	197-42 WORK ORDER #
LOCATE REQUESTED BY:	RUMMEL, KLEPPER & KAHL, LLP	PROJECT LOCATION:	BALTIMORE CITY, MARYLAND
UTILITY REQUESTED:	STORM DRAIN CULVERT ABUTMENT	SHEET 5 OF 10	PROPOSED: UTILITY WORK
UTILITY FOUND:	STORM DRAIN CULVERT ABUTMENT	FORM BY: MB	ASSISTED BY: MH SW # OF HOLES: 1
MATERIAL AS FOUND:	STONE & MORTAR	PAVING CONDITION:	FAIR DATE DUG: 1-22-00
SIZE AS FOUND:	N/A	SOIL CONDITIONS:	SOFT MOIST CLAY ROCKY
		UTILITY CONDITION:	FAIR

INSTALLED: PK AT: EDGE OF UTILITY. MARKING TAPE: GREEN

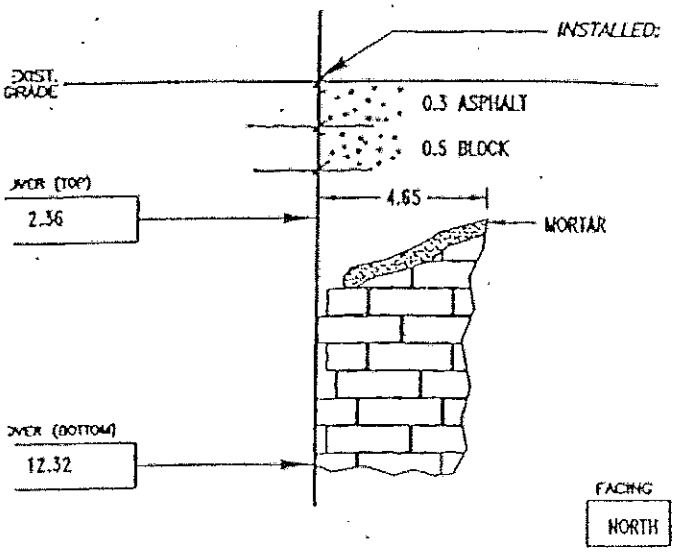

SURVEY PIN LOCATED BY: BALTIMORE CITY DPW

SURVEY INFORMATION: ALL MEASUREMENTS ON THIS FORM ARE IN ENGLISH. NO SURVEY PROVIDED.

NOTES: PK SET OVER APPROXIMATE WEST EDGE OF CULVERT. TEST PIT REVEALED MORTAR ON TOP OF CULVERT. TOP COVER TAKEN TO HIGHEST POINT INSPECTED IN TEST PIT. OFFSET = 4.65±. TEST PIT PROBED PAST 11.0' (REQUESTED "D" DEPTH). BOTTOM COVER TAKEN TO DEEPEST PROBE. NO OBSTRUCTIONS FOUND.

NOT TO SCALE

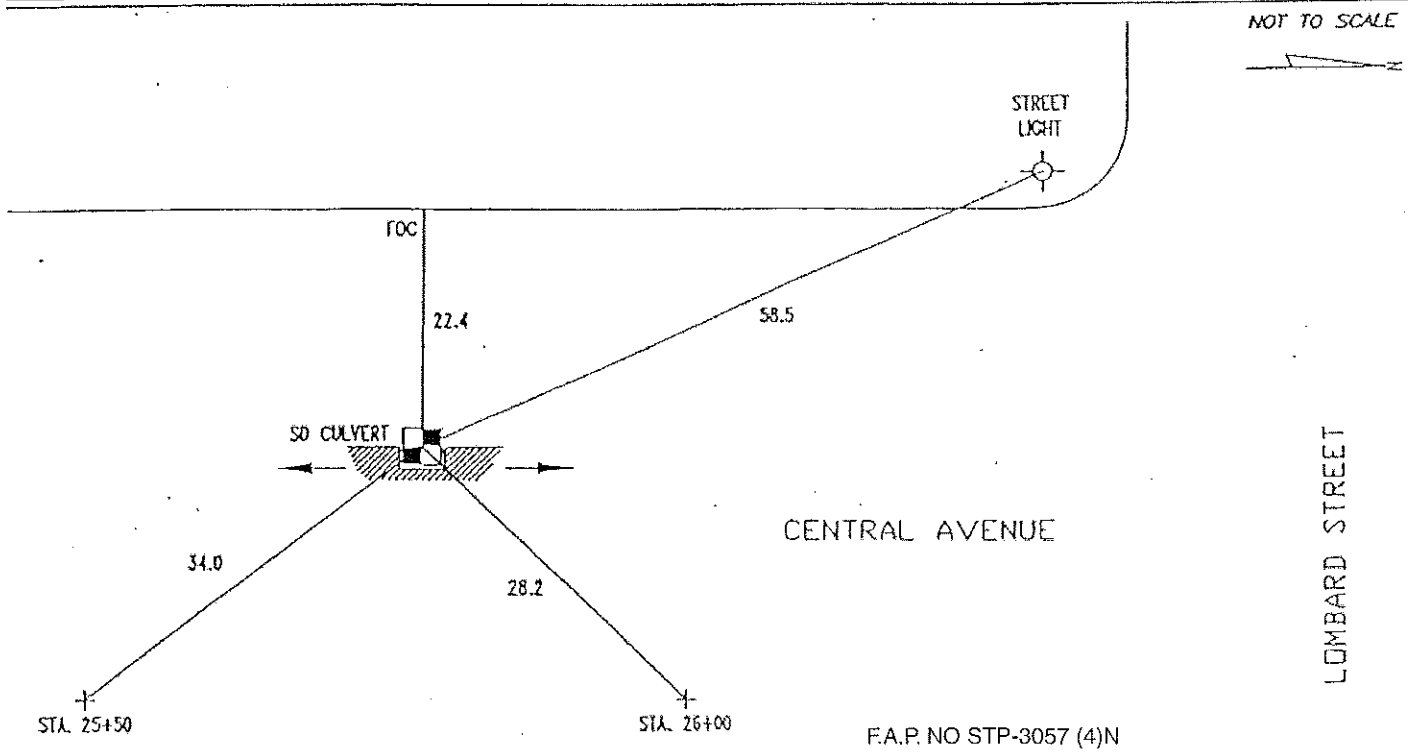

F.A.P. NO STP-3057 (4)N
SHA CONTRACT NO: BC320-001-815
BALTIMORE CITY CONTRACT NO. TR08310

"LOCATING A BETTER WAY" 1-800-LINE-11

FORM DESIGN AND CONTENTS ARE PROTECTED UNDER U.S. COPYRIGHT LAW, 1994

ACCURATE LOCATING inc.

2000015 TEST PIT REPORT NO.: TP?

PROJECT NAME:	CENTRAL AVENUE STORM DRAIN CULVERT	CLIENT JOB#	197-42 WORK ORDER #
LOCATE REQUESTED BY:	RUMMEL, KLEPPER & KAHL, LLP	PROJECT LOCATION:	BALTIMORE CITY, MARYLAND
UTILITY REQUESTED:	STORM DRAIN CULVERT ABUTMENT	SHEET 8 OF 10	PROPOSED: UTILITY WORK
UTILITY FOUND:	STORM DRAIN CULVERT	FORM BY: MB	ASSISTED BY: MH SW # OF HOLES: 1
MATERIAL AS FOUND:	STONE & MORTAR	PAVING CONDITION:	FAIR DATE DUG: 1-22-00
SIZE AS FOUND:	N/A	SOIL CONDITIONS:	SOFT MOIST CLAY ROCKY
		UTILITY CONDITION:	SEE NOTE

INSTALLED: PK AT: TOP OF UTILITY. MARKING TAPE: GREEN

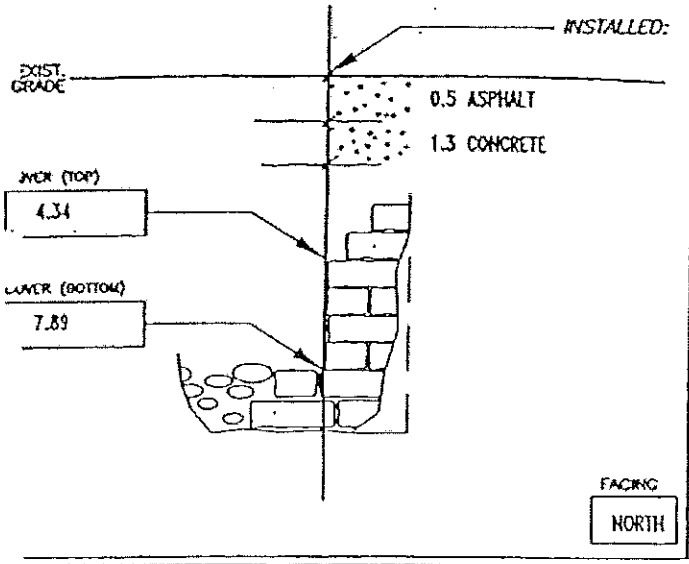

SURVEY PIN LOCATED BY: BALTIMORE CITY DPW

SURVEY INFORMATION: ALL MEASUREMENTS ON THIS FORM ARE IN ENGLISH. NO SURVEY PROVIDED.

NOTES: UNABLE TO OBTAIN REQUESTED EDGE DUE TO ROCKY CONDITIONS AND LOOSE STONE THAT IS BELIEVED TO BE THE CULVERT. PK SET OVER WHERE STONE APPEARS TO RISE TOWARDS CENTERLINE. UNABLE TO PROBE TO 12.5' (REQUESTED "D" DEPTH) DUE TO ROCKS AND STONE ENCOUNTERED IN TEST PIT. BOTTOM COVER TAKEN TO DEEPEST PROBE.

NOT TO SCALE

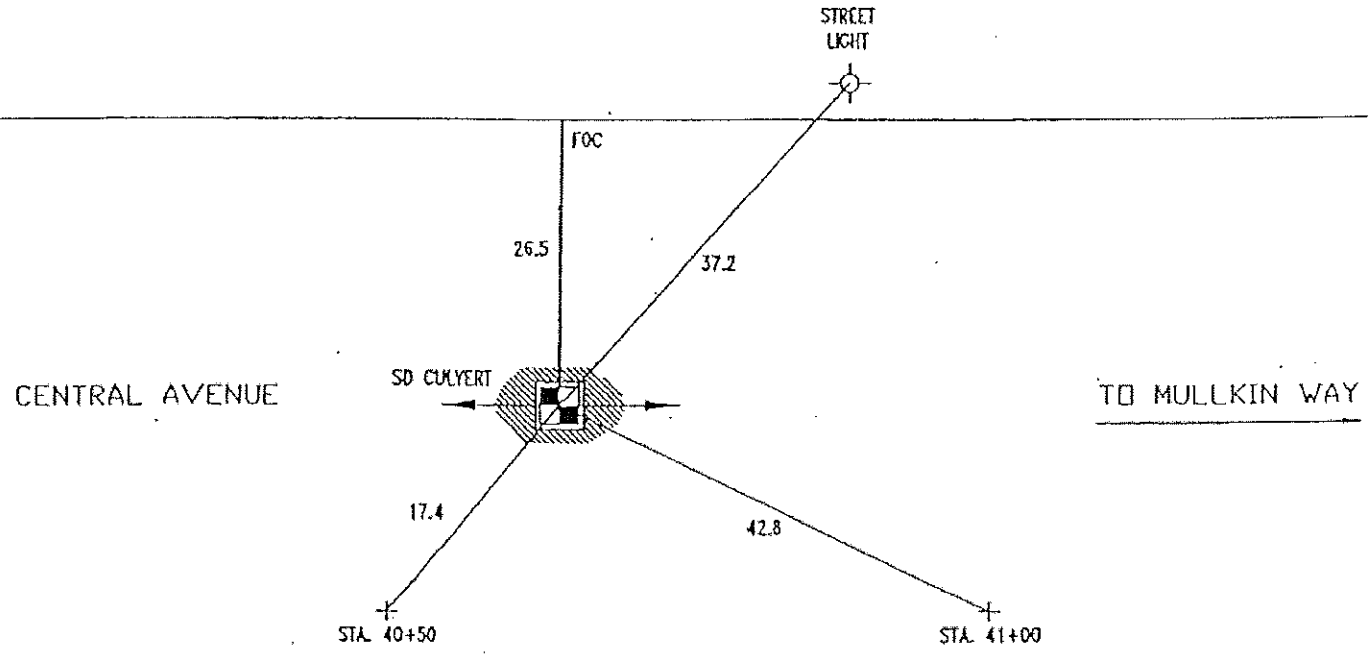

F.A.P. NO STP-3057 (4)N
SHA CONTRACT NO: BC320-001-815
BALTIMORE CITY CONTRACT NO. TR08310

FORM DESIGN AND CONTENTS ARE PROTECTED UNDER U.S. COPYRIGHT LAW, 1994

"LOCATING A BETTER WAY" 1-800-UNDERIT

ACCURATE LOCATING inc.

FILE 2000013 TEST PIT REPORT NO.: TP

PROJECT NAME:	CENTRAL AVENUE STORM DRAIN CULVERT	CLIENT JOB #	197-42 WORK ORDER #
LOCATE REQUESTED BY:	RUMMEL, KLEPPER & KAHL, LLP	PROJECT LOCATION:	BALTIMORE CITY, MARYLAND
UTILITY REQUESTED:	STORM DRAIN CULVERT ABUTMENT	SHEET 8 OF 10	PROPOSED: UTILITY WORK
UTILITY FOUND:	STORM DRAIN CULVERT	FORM BY: MB	ASSISTED BY: MH SW # OF HOLES: 1
MATERIAL AS FOUND:	STONE	PAVING CONDITION:	FAIR DATE DUG: 1-22-00
SIZE AS FOUND:	N/A	SOIL CONDITIONS:	SOFT MOIST CLAY ROCKY
		UTILITY CONDITION:	SEE NOTE

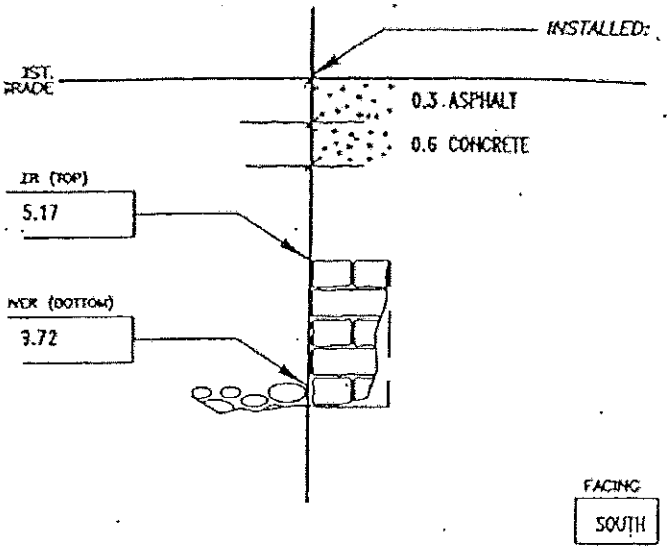

SURVEY PIN LOCATED BY: BALTIMORE CITY DPW

SURVEY INFORMATION: ALL MEASUREMENTS ON THIS FORM ARE IN ENGLISH. NO SURVEY PROVIDED.

NOTES: PK SET OVER EAST EDGE OF CULVERT. TEST PIT REVEALED CULVERT IN POOR CONDITION. NO MORTAR HOLDING STONES TOGETHER. UNABLE TO PROBE TO 12.5' (REQUESTED "D" DEPTH) DUE TO LARGE STONE ENCOUNTERED IN BOTTOM OF TEST PIT. BOTTOM COVER TAKEN TO DEEPEST PROBE.

NOT TO SCALE

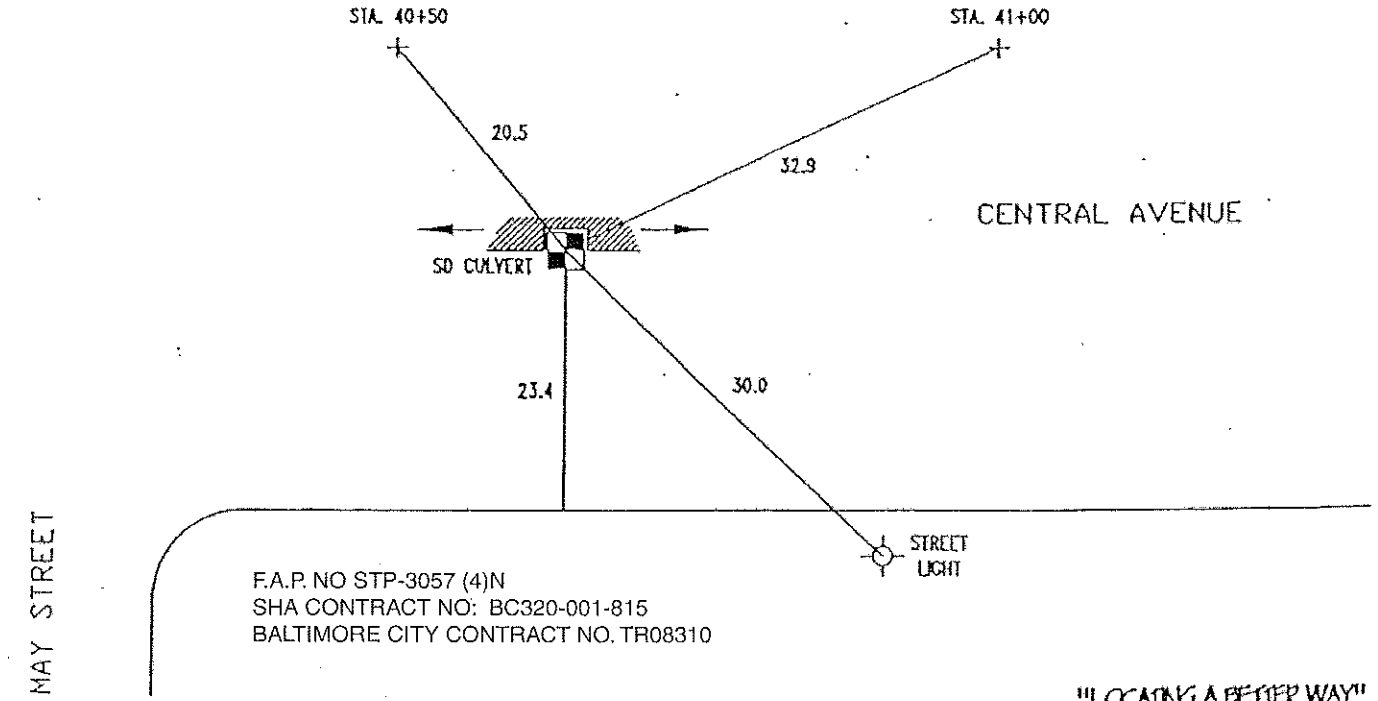

F.A.P. NO STP-3057 (4)N
SHA CONTRACT NO: BC320-001-815
BALTIMORE CITY CONTRACT NO. TR08310

THIS DESIGN AND CONTENTS ARE PROTECTED UNDER U.S. COPYRIGHT LAW, 1994

"LOCATING A BETTER WAY" 1-800-UNDERIT

A/I/DATA
Accurate Infrastructure Data, Inc.
Underground Utility Locating, Surveying,
Mapping and Data Management

1100 Batavia Farm Rd., Suite 200
Baltimore, MD 21237
Phone: 410-686-5091
Fax: 410-686-5093

TEST HOLE SUMMARY

F.A.P. NO. STP-3057(4)N
SHA CONTRACT NO: BC320-001-815
BALTIMORE CITY CONTRACT NO. TR08310

PROJECT: CENTRAL AVENUE
CLIENT: WHITMAN REQUARDT AND ASSOCIATES, LLP

A/I/DATA PROJECT NO.: 09134

DATE: JANUARY 8, 2010
DATE OF FIELD OPERATIONS: DECEMBER 09 - 18, 2009

(ALL MEASUREMENTS IN DECIMAL FEET)

TH#	UTILITY REQUESTED	UTILITY FOUND	COVER	UTILITY ELEVATION	REMARKS
A01	8" WATER	8" CAST IRON WATER	3.25	21.92	
A03	2.5 x 2' STORM DRAIN	2.5' x 2' STONE STORM DRAIN CULVERT	TOP 1.85 BOTTOM 4.85	TOP 25.51 BOTTOM 22.51	
A04	ELECTRIC	CAST IN PLACE CONCRETE ELECTRIC DUCT	TOP 3.67	TOP 24.60	
A05	6" GAS	6" CAST IRON GAS	4.14	27.93	
A06	18" STORM DRAIN	CAST IN PLACE CONCRETE ELECTRIC DUCT	TOP 3.87 BOTTOM 5.05	TOP 28.05 BOTTOM 26.87	
A07	TELEPHONE	CAST IN PLACE CONCRETE TELEPHONE DUCT	TOP 5.05 BOTTOM 5.64	TOP 26.88 BOTTOM 26.29	
A08	8" STORM DRAIN	NO UTILITY FOUND	N/A	N/A	
A09	18" STORM DRAIN	CAST IN PLACE CONCRETE	3.87	27.62	
A10	WATER	8" DUCTILE IRON WATER	3.20	28.89	
A12	6" GAS	6" WRAPPED STEEL GAS	1.98	30.49	
A13	4" WATER	4" CAST IRON WATER	3.91	29.81	
A13A	18" STORM DRAIN	CLAY PIPE	4.69	29.03	
A14	15" STORM DRAIN	15" RCP STORM DRAIN	4.03	30.26	
A15	TELEPHONE	CAST IN PLACE CONCRETE TELEPHONE DUCT	TOP 4.03 BOTTOM 4.63	TOP 30.20 BOTTOM 29.60	
A15A	6" WATER	6" CAST IRON WATER	3.04	31.28	
A16	4" WATER AND 16"X14" STORM DRAIN	6" CAST IRON WATER & 4" UNKNOWN	4.23	29.52	

TH#	UTILITY REQUESTED	UTILITY FOUND	COVER	UTILITY ELEVATION	REMARKS
A17	18" STORM DRAIN	CONCRETE	TOP 1.68 BOTTOM 2.14	TOP 32.05 BOTTOM 31.59	ADDITIONAL UTILITY EXPOSED IN TEST HOLE
A18	STEAM / SANITARY	NO UTILITY FOUND	N/A	N/A	
A19	3" GAS	3" WRAPPED STEEL GAS	2.36	31.42	
A20	STORM DRAIN	PRECAST STORM DRAIN	2.79	30.48	
A21	TELEPHONE	CAST IN PLACE CONCRETE ELECTRIC DUCT	TOP 2.05	TOP 30.45	
A22	20" STORM DRAIN	20" RCP STORM DRAIN	3.89	29.70	
A23	6" GAS	6" GAS & 10" CAST IRON WATER	3.06	31.33	
A24	3" GAS	6" GAS	3.81	29.66	
A25	TELEPHONE	CAST IN PLACE CONCRETE TELEPHONE DUCT	TOP 2.33 BOTTOM 3.02	TOP 31.07 BOTTOM 30.38	
A26	6" GAS	6" GAS	3.57	30.25	
A27	TELEPHONE	4" PLASTIC TELEPHONE CONDUIT	2.16	31.75	
A28	6" GAS	6" CAST IRON GAS	2.42	31.22	
A29	10" WATER	WATER	4.11	29.49	SEE TEST HOLE DATA SHEET
A30	24" STORM DRAIN	24" RCP STORM DRAIN	3.81	29.76	
A31	16" STEAM 24" CONDENSATE & ELECTRIC	NO UTILITY FOUND	N/A	N/A	
A32	16" STEAM & 24" CONDENSATE	NO UTILITY FOUND	N/A	N/A	
A33	GAS	NO UTILITY FOUND	N/A	N/A	
A34	ELECTRIC	CAST IN PLACE CONCRETE ELECTRIC DUCT	TOP 3.71 BOTTOM 6.42	TOP 32.04 BOTTOM 29.33	
A35	26" STORM DRAIN	26" CAST IRON STORM DRAIN	1.10	34.93	
A36	STORM DRAIN	CONCRETE	0.85	35.08	SEE TEST HOLE DATA SHEET
A37	24" GAS	24" CAST IRON GAS	5.80	35.87	
A38	10" WATER	10" CAST IRON WATER	3.74	37.94	
A39	12" STEAM & 20" CONDENSATE	CONCRETE	5.00	36.46	
A40	10" WATER	10" CAST IRON WATER	5.70	28.22	
A41	14" STORM DRAIN	NO UTILITY FOUND	N/A	N/A	

F.A.P. NO. STP-3057(4)N
SHA CONTRACT NO: BC320-001-815
BALTIMORE CITY CONTRACT NO. TR08310

TH#	UTILITY REQUESTED	UTILITY FOUND	COVER	UTILITY ELEVATION	REMARKS
A42	TELEPHONE	CAST IN PLACE CONCRETE TELEPHONE DUCT	TOP 1.70 BOTTOM 2.18	TOP 32.02 BOTTOM 31.54	
A43	TELEPHONE	CAST IN PLACE CONCRETE TELEPHONE DUCT	TOP 5.24	27.28	
B01	6" WATER	6" CAST IRON WATER	3.54	19.80	
B02	4" GAS	4" CAST IRON GAS	2.93	20.33	
B03	WATER	NO UTILITY FOUND	N/A	N/A	
B04	8" GAS	8" GAS	4.04	23.35	
B05	6" WATER	6" CAST IRON WATER	3.04	22.91	
B06	6" WATER	6" CAST IRON WATER	3.49	24.86	
B07	3" GAS	WRAPPED STEEL GAS	4.30	23.76	
B08	ELECTRIC	CAST IN PLACE CONCRETE ELECTRIC DUCT	TOP 3.44 BOTTOM 4.80	TOP 27.84 BOTTOM 26.48	
B09	10" WATER	10" CAST IRON WATER	5.48	25.87	
B10	6" STORM DRAIN	18" RCP STORM DRAIN	2.12	29.18	
B11	6" WATER	6" CAST IRON WATER	2.89	28.97	
B12	6" WATER	6" CAST IRON WATER	3.22	29.96	
B13	8" STORM	NO UTILITY FOUND	N/A	N/A	
B13A	8" STORM	NO UTILITY FOUND	N/A	N/A	
B14	ELECTRIC	CAST IN PLACE CONCRETE ELECTRIC DUCT	TOP 4.45 BOTTOM 5.92	TOP 28.01 BOTTOM 26.54	
B15	16" WATER	16" CAST IRON WATER	3.80	29.09	
B16	TELEPHONE	CAST IN PLACE CONCRETE ELECTRIC DUCT	TOP 3.00	TOP 30.35	
B17	6" STEAM SUPPLY & 3" STEAM RETURN	10" & 5" WRAPPED STEEL ENCASEMENT PIPES	5.13	27.85	
B18	12" STEAM SUPPLY & 20" STEAM RETURN	NO UTILITY FOUND	N/A	N/A	
B18A	12" STEAM SUPPLY & 20" STEAM RETURN	NO UTILITY FOUND	N/A	N/A	
B19	6" STEAM SUPPLY & 3" STEAM RETURN	STEAM SUPPY & RETURN	4.04	29.58	SEE TEST HOLE DATA SHEET

TH#	UTILITY REQUESTED	UTILITY FOUND	COVER	UTILITY ELEVATION	REMARKS
B20	ELECTRIC	CAST IN PLACE CONCRETE ELECTRIC DUCT	TOP 5.08 BOTTOM 7.01	TOP 27.97 BOTTOM 26.04	
B21	16" WATER	16" CAST IRON WATER	3.31	29.73	
B22	SANITARY	NO UTILITY FOUND	N/A	N/A	
B23	16" STEAM & 24" CONDENSATE	CONCRETE	2.70	30.51	
B24	30" STORM DRAIN	30" RCP STORM DRAIN	3.03	30.12	
B25	ELECTRIC DUCT	CAST IN PLACE CONCRETE ELECTRIC DUCT	TOP 5.68 BOTTOM 7.27	TOP 27.13 BOTTOM 25.54	
B26	16" WATER	16" WATER	3.32	29.77	
B27	6" WATER	6" CAST IRON WATER	3.79	30.16	
B28	6" GAS	6" CAST IRON GAS	3.02	31.13	
B29	STEAM CONDENSATE	CAST IRON STEAM CONDENSATE	2.11	31.32	
B30	16" STEAM & 24" CONDENSATE	NO UTILITY FOUND	N/A	N/A	
B31	16" STEAM & 24" CONDENSATE	NO UTILITY FOUND	N/A	N/A	
B32	ELECTRIC	CLAY ELECTRIC DUCT	TOP 4.65 BOTTOM 6.85	TOP 31.90 BOTTOM 29.70	
B33	16" WATER	16" WATER	2.75	31.14	
B34	ELECTRIC	PRECAST CLAY TILE ELECTRIC DUCT	TOP 4.07 BOTTOM 5.89	TOP 37.26 BOTTOM 35.44	
B35	16" WATER	16" CAST IRON WATER	3.94	37.36	
B36	12" STEAM & 20" CONDENSATE	NO UTILITY FOUND	N/A	N/A	
B37	ELECTRIC	NO UTILITY FOUND	N/A	N/A	
B38	16" WATER	16" CAST IRON WATER	2.90	39.12	
B39	STEAM	NO UTILITY FOUND	N/A	N/A	
B40	STEAM	NO UTILITY FOUND	N/A	N/A	
B41	8" WATER	8" WATER	3.01	24.63	

A / I / DATA - TEST HOLE DATA SHEET

JOB #: 09134 TEST HOLE # : A01

PROJECT NAME:	CENTRAL AVENUE	EXCAVATION BY: A/I/DATA	DATE DUG: 12/09/09
PROJECT LOCATION:	BALTIMORE CITY, MARYLAND	FORM BY: MCG ASSISTED BY: RRB, TDL, KLS	CHECKED BY: SEW
CLIENT NAME:	WHITMAN REQUARDT AND ASSOCIATES, LLP	PAVING CONDITION:	FAIR
UTILITY REQUESTED:	8" WATER	GENERAL SOIL CONDITIONS:	HARD MOIST ROCKY
UTILITY FOUND:	8" CAST IRON WATER	UTILITY CONDITION:	FAIR (SEE NOTE)
		MARKER SURVEYED BY:	A/I/DATA

SECTION VIEW OF TEST HOLE

NOT TO SCALE

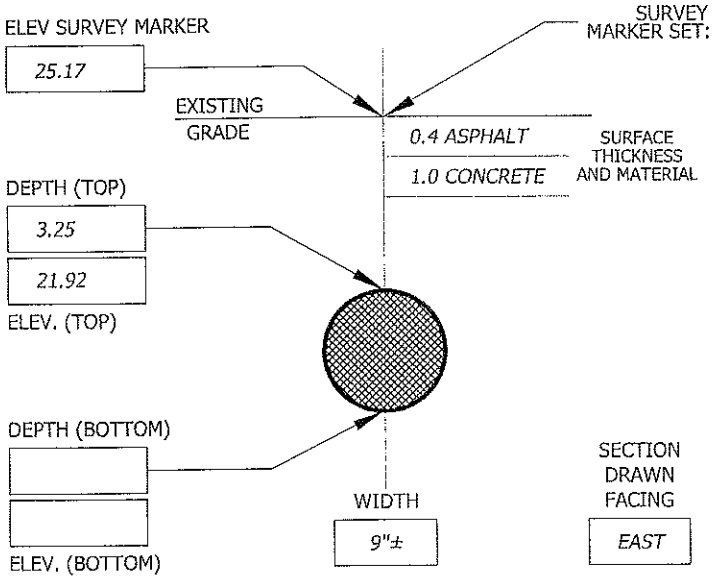

SURVEY MARKER SET: PK NAIL ABOVE: CROWN OF UTILITY MARKING TAPE INSTALLED: BLUE

CONTROL POINTS PROVIDED BY: WHITMAN REQUARDT AND ASSOCIATES, LLP

105	N= -2202.90	E= 4545.83	ELEV= 27.43
106	N= -1748.30	E= 4524.82	ELEV= 32.27

A/I/DATA MARKER:	NORTHING	EASTING	ELEVATION
	-2235.61	4587.98	25.17

NOTES:
SIZE IS APPROXIMATE DUE TO CORROSION ON PIPE.

TEST HOLE DATA PRODUCED BY:
ACCURATE INFRASTRUCTURE DATA, INC.
1100 BATAVIA FARM ROAD, SUITE 200, BALTIMORE, MD 21237
PH: 410-686-5091 FAX: 410-686-5093
ALL MEASUREMENTS ARE SHOWN IN DECIMAL FEET EXCEPT WHERE NOTED

PLAN VIEW OF TEST HOLE

DIMENSIONS GOVERN; DO NOT SCALE

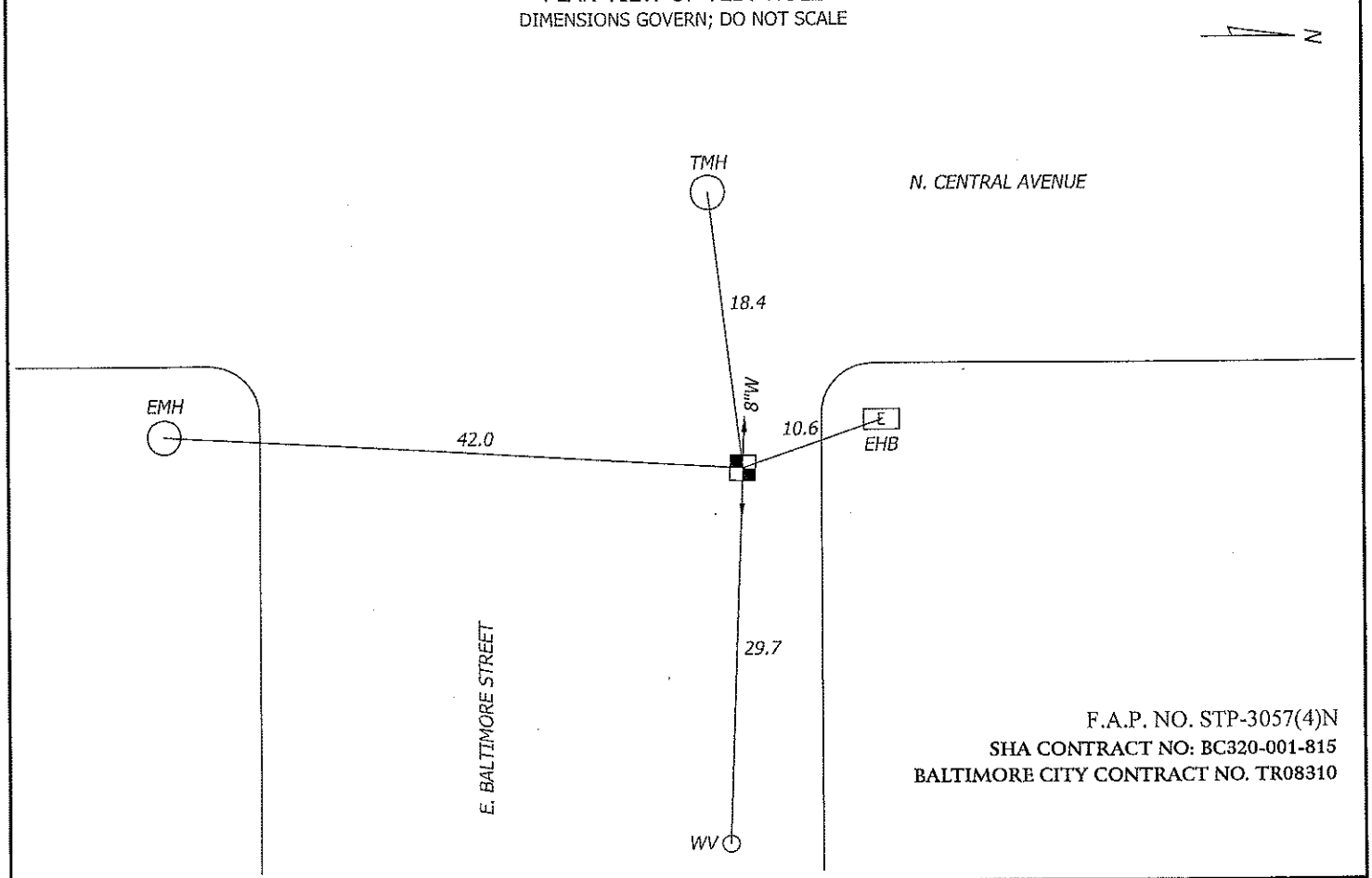

F.A.P. NO. STP-3057(4)N
SHA CONTRACT NO: BC320-001-815
BALTIMORE CITY CONTRACT NO. TR08310

A / I / DATA - TEST HOLE DATA SHEET

JOB #: 09134 TEST HOLE # : A03

PROJECT NAME:	CENTRAL AVENUE	EXCAVATION BY: A/I/DATA	DATE DUG: 12/23/09
PROJECT LOCATION:	BALTIMORE CITY, MARYLAND	FORM BY: TDM ASSISTED BY: GMC, TDL	CHECKED BY: SEW
CLIENT NAME:	WHITMAN REQUARDT AND ASSOCIATES, LLP	PAVING CONDITION:	GOOD
UTILITY REQUESTED:	2.5' x 2' STORM DRAIN	GENERAL SOIL CONDITIONS:	SOFT MOIST CLAY ROCKY
UTILITY FOUND:	2.5' x 2' STONE STORM DRAIN CULVERT	UTILITY CONDITION:	GOOD
		MARKER SURVEYED BY:	A/I/DATA

SECTION VIEW OF TEST HOLE
NOT TO SCALE

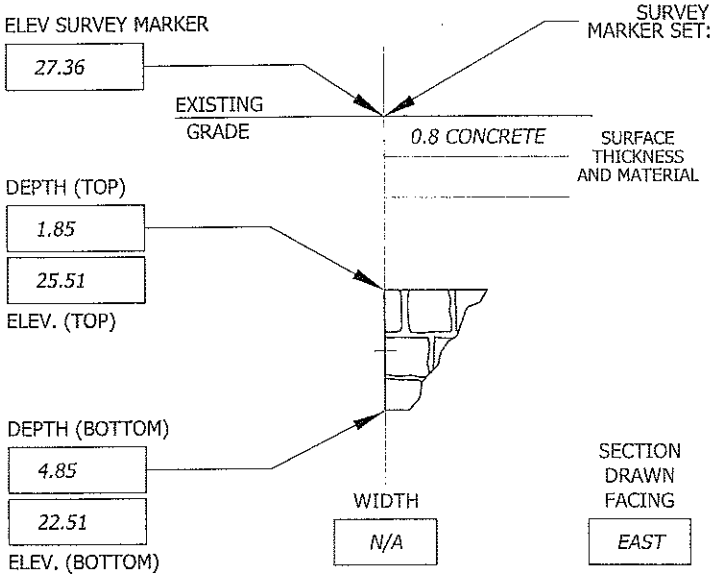

SURVEY MARKER SET: CHIS "X" ABOVE: EDGE OF UTILITY MARKING TAPE INSTALLED: GREEN

CONTROL POINTS PROVIDED BY: WHITMAN REQUARDT AND ASSOCIATES, LLP

105	N= -2202.90	E= 4545.83	ELEV= 27.43
106	N= -1748.30	E= 4524.82	ELEV= 32.27

A/I/DATA MARKER:	NORTHING	EASTING	ELEVATION
	-2221.03	4498.53	27.36

NOTES:
PK NAIL SET OVER NORTH EDGE OF CULVERT.

TEST HOLE DATA PRODUCED BY:
ACCURATE INFRASTRUCTURE DATA, INC.
1100 BATAVIA FARM ROAD, SUITE 200, BALTIMORE, MD 21237
PH: 410-686-5091 FAX: 410-686-5093
ALL MEASUREMENTS ARE SHOWN IN DECIMAL FEET EXCEPT WHERE NOTED

PLAN VIEW OF TEST HOLE
DIMENSIONS GOVERN; DO NOT SCALE

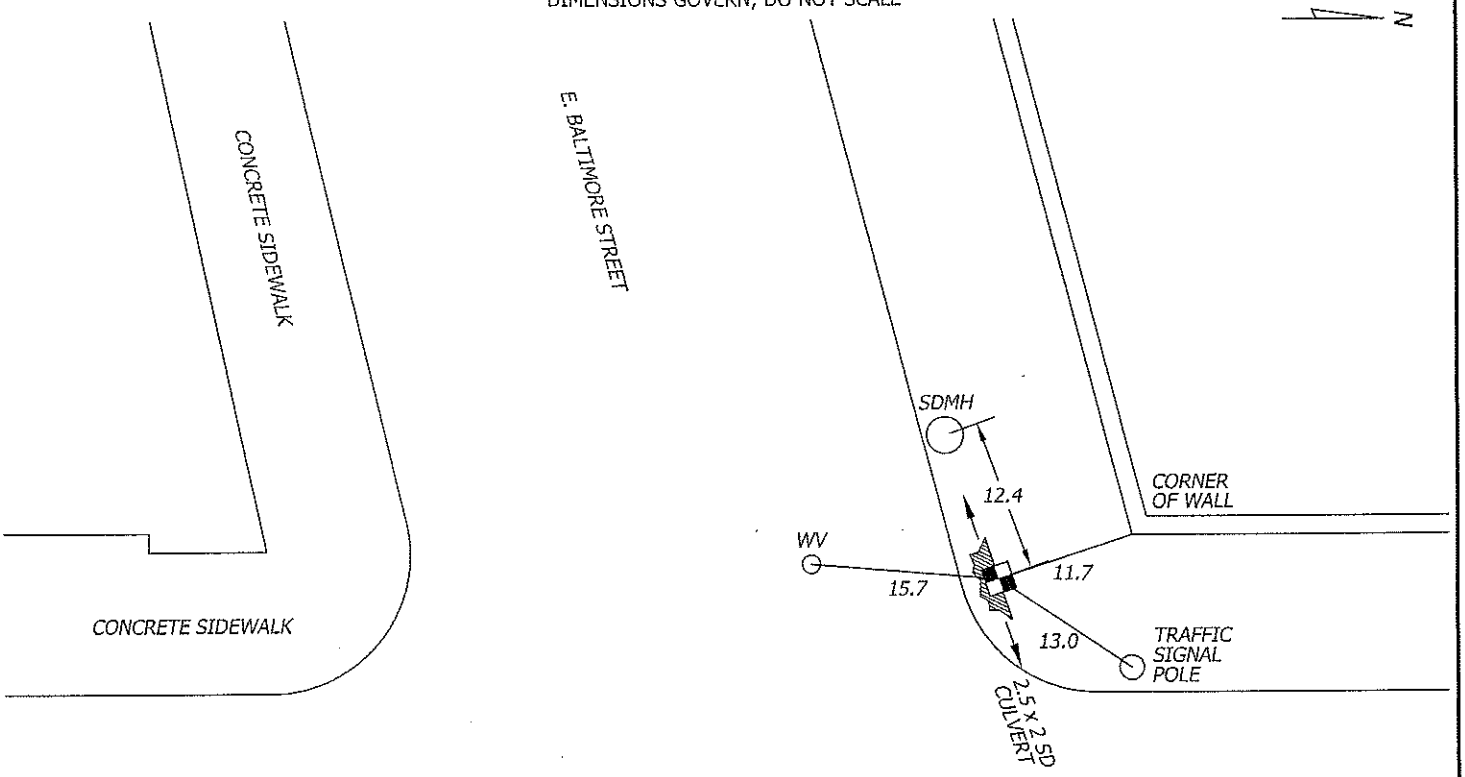

F.A.P. NO. STP-3057(4)N
SHA CONTRACT NO: BC320-001-815
BALTIMORE CITY CONTRACT NO. TR08310

A / I / DATA - TEST HOLE DATA SHEET

JOB #: 09134 TEST HOLE # : A04

PROJECT NAME:	CENTRAL AVENUE	EXCAVATION BY: A/I/DATA	DATE DUG: 12/29/09
PROJECT LOCATION:	BALTIMORE CITY, MARYLAND	FORM BY: RMS ASSISTED BY: JPW, MCG, MDI	CHECKED BY: SEW
CLIENT NAME:	WHITMAN REQUARDT AND ASSOCIATES, LLP	PAVING CONDITION:	GOOD
UTILITY REQUESTED:	ELECTRIC	GENERAL SOIL CONDITIONS:	SOFT MOIST CLAY ROCKY
UTILITY FOUND:	CAST IN PLACE CONCRETE ELECTRIC DUCT	UTILITY CONDITION:	GOOD
		MARKER SURVEYED BY:	A/I/DATA

SECTION VIEW OF TEST HOLE

NOT TO SCALE

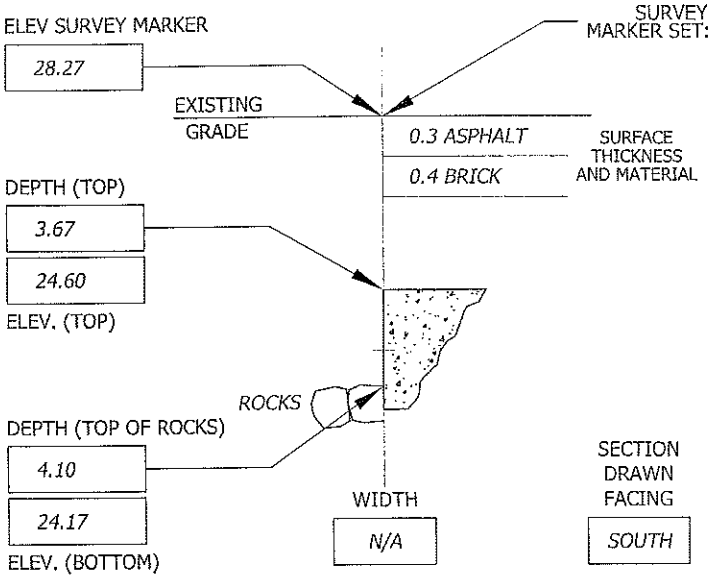

SURVEY MARKER SET: PK NAIL ABOVE: EDGE OF UTILITY MARKING TAPE INSTALLED: RED

CONTROL POINTS PROVIDED BY: WHITMAN REQUARDT AND ASSOCIATES, LLP

105	N= -2202.90	E= 4545.83	ELEV= 27.43
106	N= -1748.30	E= 4524.82	ELEV= 32.27

A/I/DATA MARKER:	NORTHING	EASTING	ELEVATION
	-2096.15	4505.19	28.27

NOTES:
PK NAIL SET OVER EAST EDGE OF DUCT. UNABLE TO EXPOSE BOTTOM OF DUCT DUE TO LARGE ROCKS ENCOUNTERED.

TEST HOLE DATA PRODUCED BY:
ACCURATE INFRASTRUCTURE DATA, INC.
1100 BATAVIA FARM ROAD, SUITE 200, BALTIMORE, MD 21237
PH: 410-686-5091 FAX: 410-686-5093
ALL MEASUREMENTS ARE SHOWN IN DECIMAL FEET EXCEPT WHERE NOTED

PLAN VIEW OF TEST HOLE

DIMENSIONS GOVERN; DO NOT SCALE

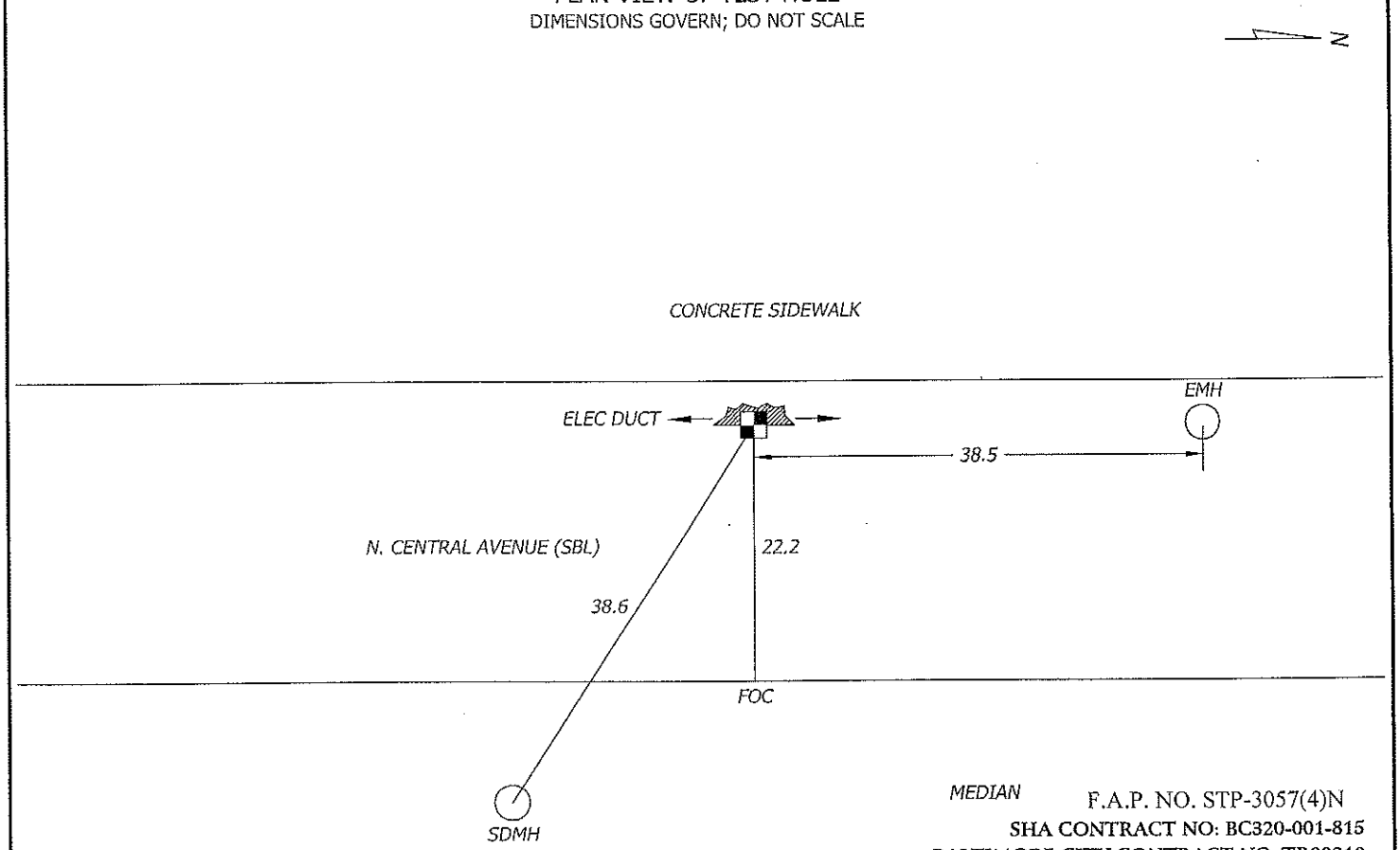

F.A.P. NO. STP-3057(4)N
SHA CONTRACT NO: BC320-001-815
BALTIMORE CITY CONTRACT NO. TR08310

A / I / DATA - TEST HOLE DATA SHEET

JOB #: 09134 TEST HOLE # : A05

PROJECT NAME:	CENTRAL AVENUE	EXCAVATION BY: A/I/DATA	DATE DUG: 12/18/09
PROJECT LOCATION:	BALTIMORE CITY, MARYLAND	FORM BY: RRB ASSISTED BY: TDL, CRB, JMK	CHECKED BY: SEW
CLIENT NAME:	WHITMAN REQUARDT AND ASSOCIATES, LLP	PAVING CONDITION:	GOOD
UTILITY REQUESTED:	6" GAS	GENERAL SOIL CONDITIONS:	SOFT MOIST SAND
UTILITY FOUND:	6" CAST IRON GAS	UTILITY CONDITION:	POOR
		MARKER SURVEYED BY:	A/I/DATA

SECTION VIEW OF TEST HOLE

NOT TO SCALE

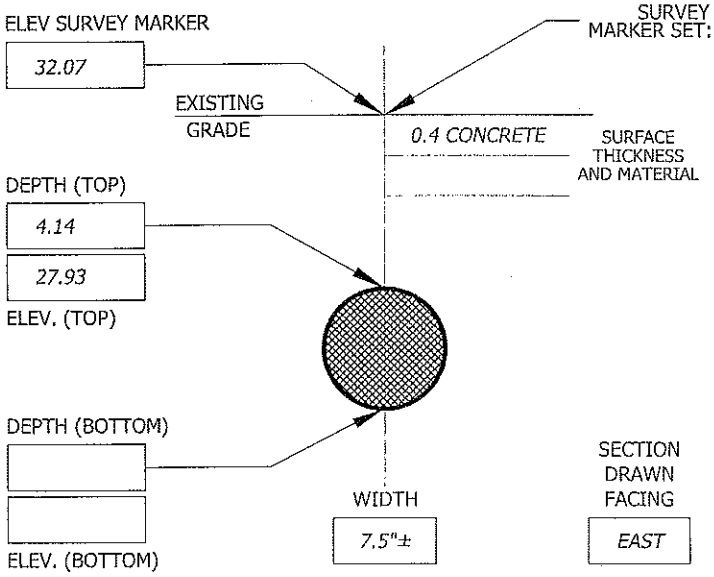

SURVEY MARKER SET: CHIS "X" ABOVE: CROWN OF UTILITY MARKING TAPE INSTALLED: YELLOW

CONTROL POINTS PROVIDED BY: WHITMAN REQUARDT AND ASSOCIATES, LLP

105	N= -2202.90	E= 4545.83	ELEV= 27.43
106	N= -1748.30	E= 4524.82	ELEV= 32.27

A/I/DATA MARKER:	NORTHING	EASTING	ELEVATION
	-1876.74	4477.41	32.07

NOTES:

TEST HOLE DATA PRODUCED BY:
ACCURATE INFRASTRUCTURE DATA, INC.
1100 BATAVIA FARM ROAD, SUITE 200, BALTIMORE, MD 21237
PH: 410-686-5091 FAX: 410-686-5093
ALL MEASUREMENTS ARE SHOWN IN DECIMAL FEET EXCEPT WHERE NOTED

PLAN VIEW OF TEST HOLE

DIMENSIONS GOVERN; DO NOT SCALE

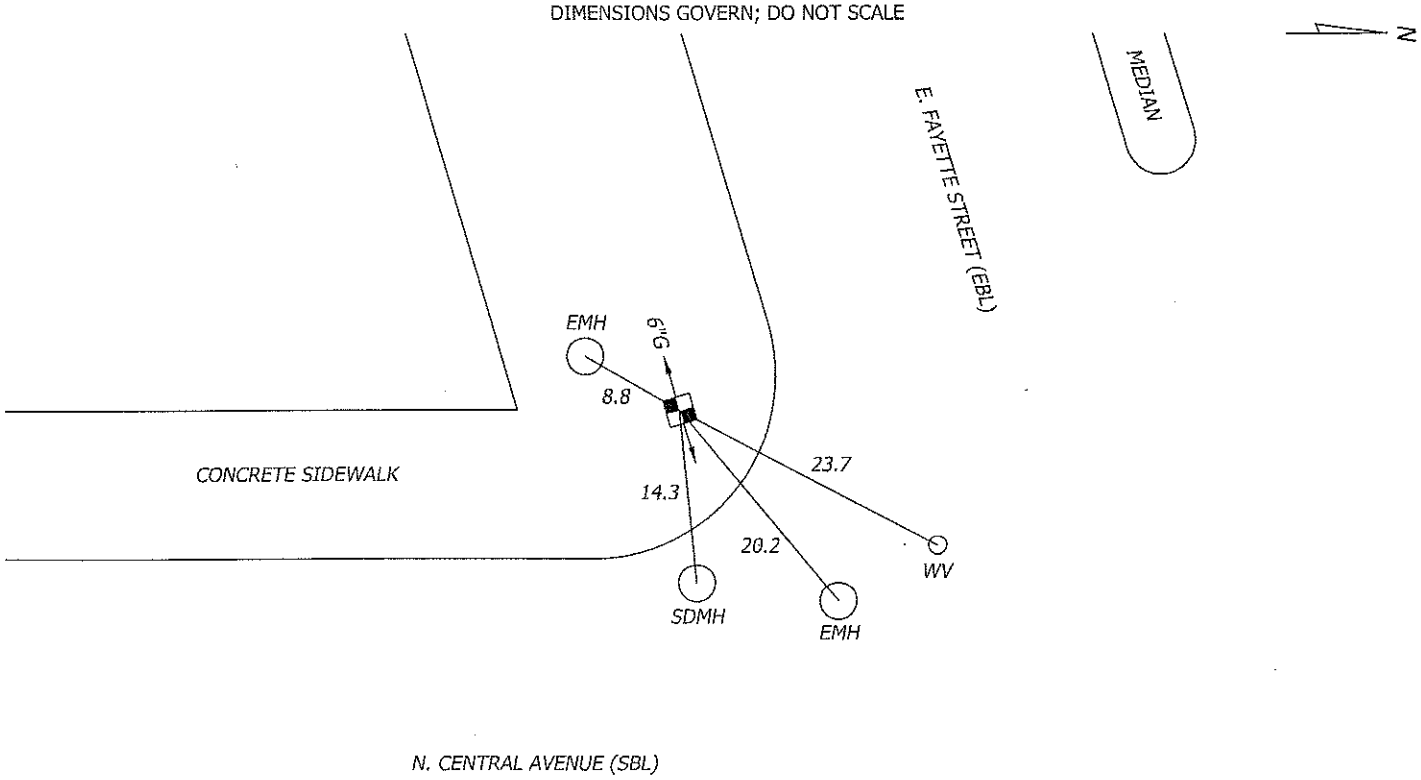

F.A.P. NO. STP-3057(4)N
SHA CONTRACT NO: BC320-001-815
BALTIMORE CITY CONTRACT NO. TR08310

A / I / DATA - TEST HOLE DATA SHEET

JOB #: 09134 TEST HOLE # : A06

PROJECT NAME:	CENTRAL AVENUE	EXCAVATION BY: A/I/DATA	DATE DUG: 12/28/09
PROJECT LOCATION:	BALTIMORE CITY, MARYLAND	FORM BY: RMS ASSISTED BY: MCG, MDI, JPW	CHECKED BY: SEW
CLIENT NAME:	WHITMAN REQUARDT AND ASSOCIATES, LLP	PAVING CONDITION:	GOOD
UTILITY REQUESTED:	18" STORM DRAIN	GENERAL SOIL CONDITIONS:	SOFT MOIST CLAY ROCKY
UTILITY FOUND:	CAST IN PLACE CONCRETE ELECTRIC DUCT	UTILITY CONDITION:	GOOD
		MARKER SURVEYED BY:	A/I/DATA

SECTION VIEW OF TEST HOLE

NOT TO SCALE

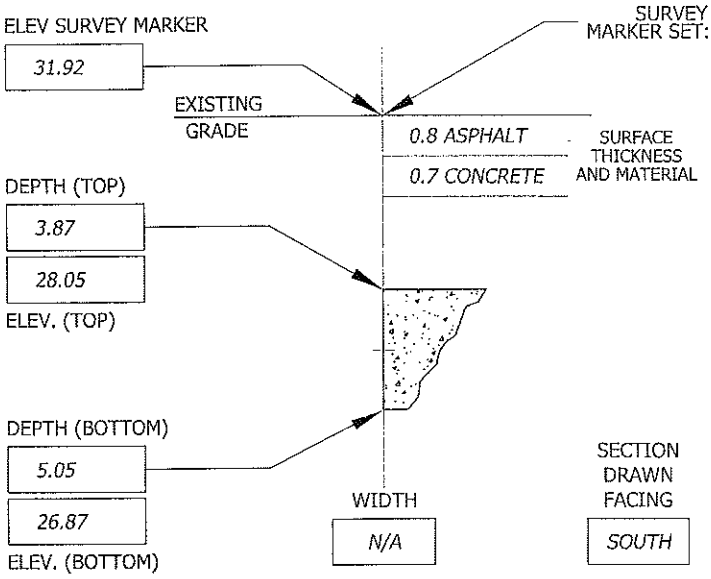

SURVEY MARKER SET: PK NAIL ABOVE: EDGE OF UTILITY MARKING TAPE INSTALLED: RED

CONTROL POINTS PROVIDED BY: WHITMAN REQUARDT AND ASSOCIATES, LLP

105	N= -2202.90	E= 4545.83	ELEV= 27.43
106	N= -1748.30	E= 4524.82	ELEV= 32.27

A/I/DATA MARKER:	NORTHING	EASTING	ELEVATION
	-1843.63	4488.65	31.92

NOTES:
TEST HOLE REQUESTED FOR A 18" STORM DRAIN. TEST HOLE REVEALED AN ELECTRIC DUCT. EXCAVATION CONTINUED TO A DEPTH OF 8'±. UNABLE TO LOCATE STORM DRAIN. PK NAIL SET OVER EAST EDGE OF DUCT.

TEST HOLE DATA PRODUCED BY:
ACCURATE INFRASTRUCTURE DATA, INC.
1100 BATAVIA FARM ROAD, SUITE 200, BALTIMORE, MD 21237
PH: 410-686-5091 FAX: 410-686-5093
ALL MEASUREMENTS ARE SHOWN IN DECIMAL FEET EXCEPT WHERE NOTED

PLAN VIEW OF TEST HOLE

DIMENSIONS GOVERN; DO NOT SCALE

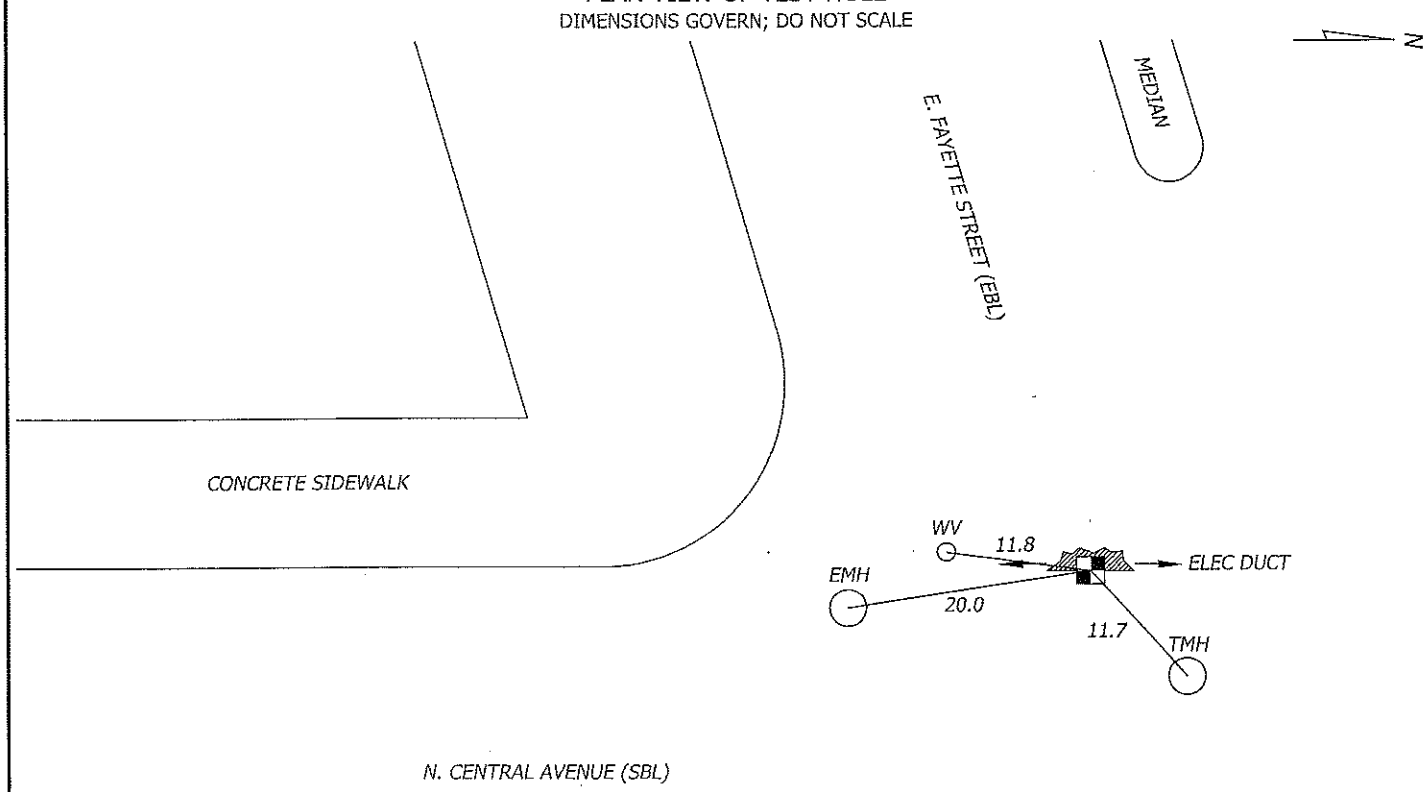

F.A.P. NO. STP-3057(4)N
SHA CONTRACT NO: BC320-001-815
BALTIMORE CITY CONTRACT NO. TR08310

A / I / DATA - TEST HOLE DATA SHEET

JOB #: 09134 TEST HOLE # : A07

PROJECT NAME:	CENTRAL AVENUE	EXCAVATION BY: A/I/DATA	DATE DUG: 12/28/09
PROJECT LOCATION:	BALTIMORE CITY, MARYLAND	FORM BY: RMS ASSISTED BY: MCG, MDI, JPW	CHECKED BY: SEW
CLIENT NAME:	WHITMAN REQUARDT AND ASSOCIATES, LLP	PAVING CONDITION:	GOOD
UTILITY REQUESTED:	TELEPHONE	GENERAL SOIL CONDITIONS:	SOFT MOIST CLAY ROCKY
UTILITY FOUND:	CAST IN PLACE CONCRETE TELEPHONE DUCT	UTILITY CONDITION:	GOOD
		MARKER SURVEYED BY:	A/I/DATA

SECTION VIEW OF TEST HOLE

NOT TO SCALE

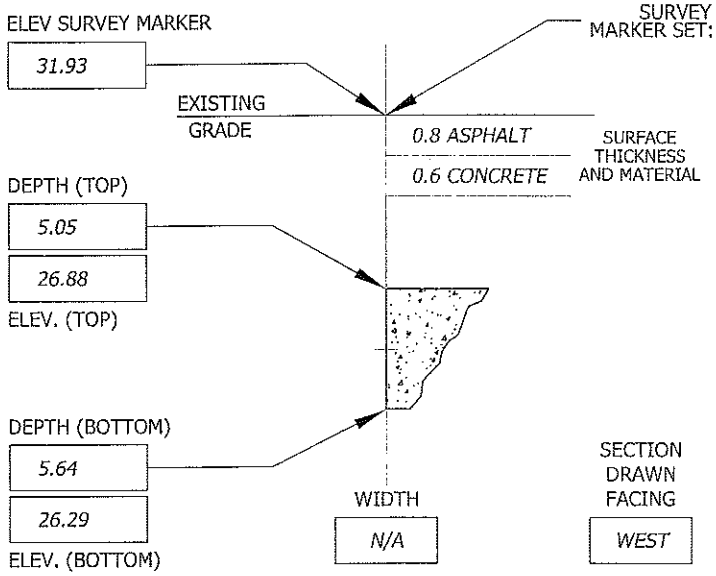

SURVEY MARKER SET: PK NAIL ABOVE: EDGE OF UTILITY MARKING TAPE INSTALLED: ORANGE

CONTROL POINTS PROVIDED BY: WHITMAN REQUARDT AND ASSOCIATES, LLP

105	N= -2202.90	E= 4545.83	ELEV= 27.43
106	N= -1748.30	E= 4524.82	ELEV= 32.27

A/I/DATA MARKER:	NORTHING	EASTING	ELEVATION
	-1840.21	4489.78	31.93

NOTES:
PK NAIL SET OVER SOUTH EDGE OF DUCT.

TEST HOLE DATA PRODUCED BY:
ACCURATE INFRASTRUCTURE DATA, INC.
1100 BATAVIA FARM ROAD, SUITE 200, BALTIMORE, MD 21237
PH: 410-686-5091 FAX: 410-686-5093
ALL MEASUREMENTS ARE SHOWN IN DECIMAL FEET EXCEPT WHERE NOTED

PLAN VIEW OF TEST HOLE

DIMENSIONS GOVERN; DO NOT SCALE

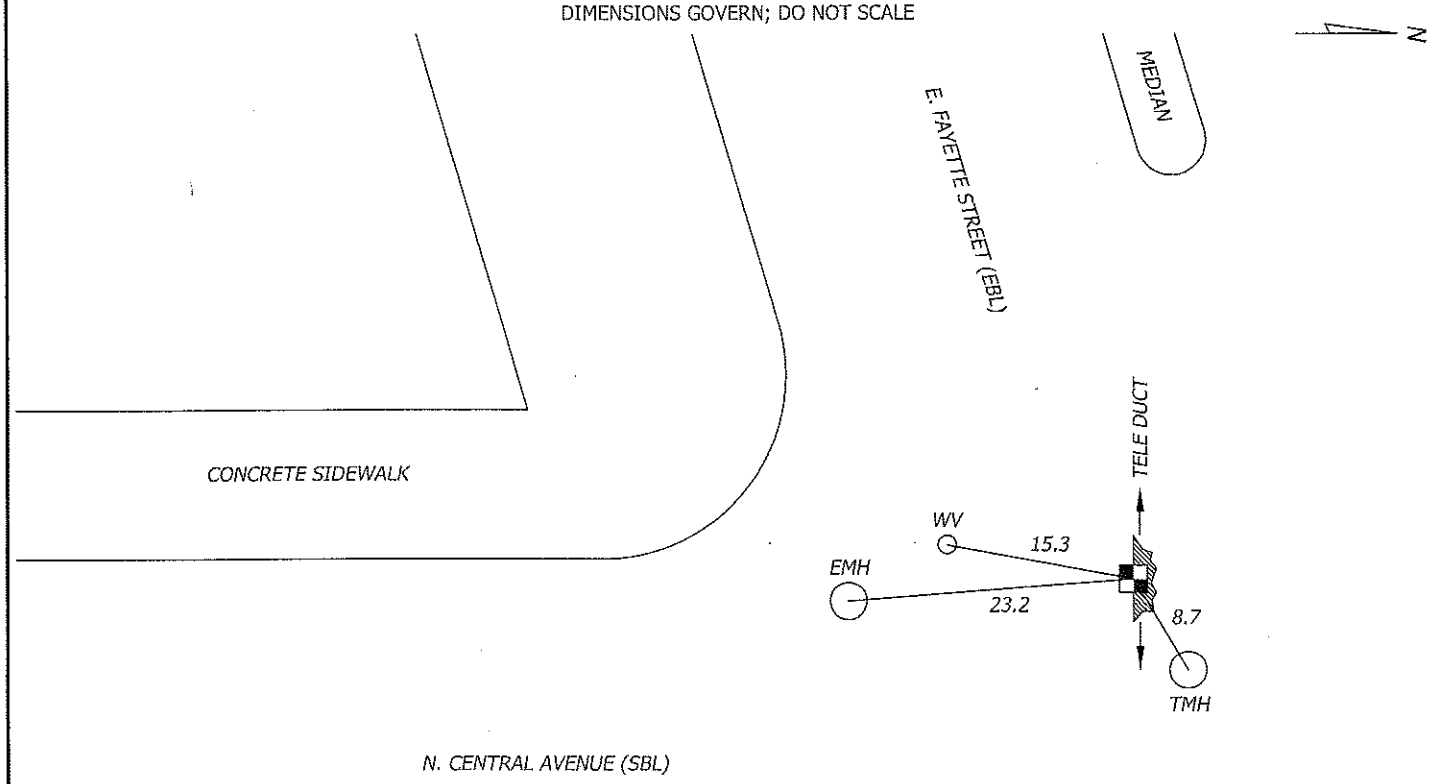

F.A.P. NO. STP-3057(4)N
SHA CONTRACT NO: BC320-001-815
BALTIMORE CITY CONTRACT NO. TR08310

A / I / DATA - TEST HOLE DATA SHEET

JOB #: 09134 TEST HOLE # : A08

PROJECT NAME:	CENTRAL AVENUE	EXCAVATION BY: A/I/DATA	DATE DUG: 01/05/10
PROJECT LOCATION:	BALTIMORE CITY, MARYLAND	FORM BY: RMS ASSISTED BY: JPW, MCG	CHECKED BY: SEW
CLIENT NAME:	WHITMAN REQUARDT AND ASSOCIATES, LLP	PAVING CONDITION:	GOOD
UTILITY REQUESTED:	8" STORM DRAIN	GENERAL SOIL CONDITIONS:	HARD DRY ROCKY
UTILITY FOUND:	NO UTILITY FOUND	UTILITY CONDITION:	N/A
		MARKER SURVEYED BY:	A/I/DATA

SECTION VIEW OF TEST HOLE

NOT TO SCALE

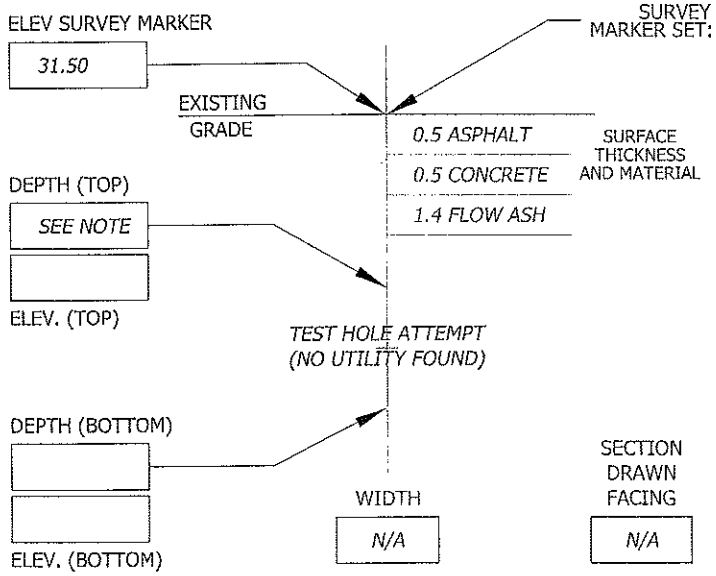

SURVEY MARKER SET: SEE NOTE ABOVE: N/A OF UTILITY MARKING TAPE INSTALLED: N/A

CONTROL POINTS PROVIDED BY: WHITMAN REQUARDT AND ASSOCIATES, LLP

105	N= -2202.90	E= 4545.83	ELEV= 27.43
106	N= -1748.30	E= 4524.82	ELEV= 32.27

A/I/DATA MARKER:	NORTHING	EASTING	ELEVATION
	-1826.75	4542.86	31.50

NOTES:
TEST HOLE PERFORMED AT CLIENT'S REQUESTED LOCATION. ENCOUNTERED A LARGE ROCK AT A DEPTH OF 4.8'±. UNABLE TO CONTINUE EXCAVATION. PROBED SOUTH OF ROCK TO 8'±. NO UTILITY FOUND. NO SURVEY MARKER SET. ALL TIES AND SURVEY TAKEN TO CENTER OF HOLE.

TEST HOLE DATA PRODUCED BY:
ACCURATE INFRASTRUCTURE DATA, INC.
1100 BATAVIA FARM ROAD, SUITE 200, BALTIMORE, MD 21237
PH: 410-686-5091 FAX: 410-686-5093

ALL MEASUREMENTS ARE SHOWN IN DECIMAL FEET EXCEPT WHERE NOTED

PLAN VIEW OF TEST HOLE

DIMENSIONS GOVERN; DO NOT SCALE

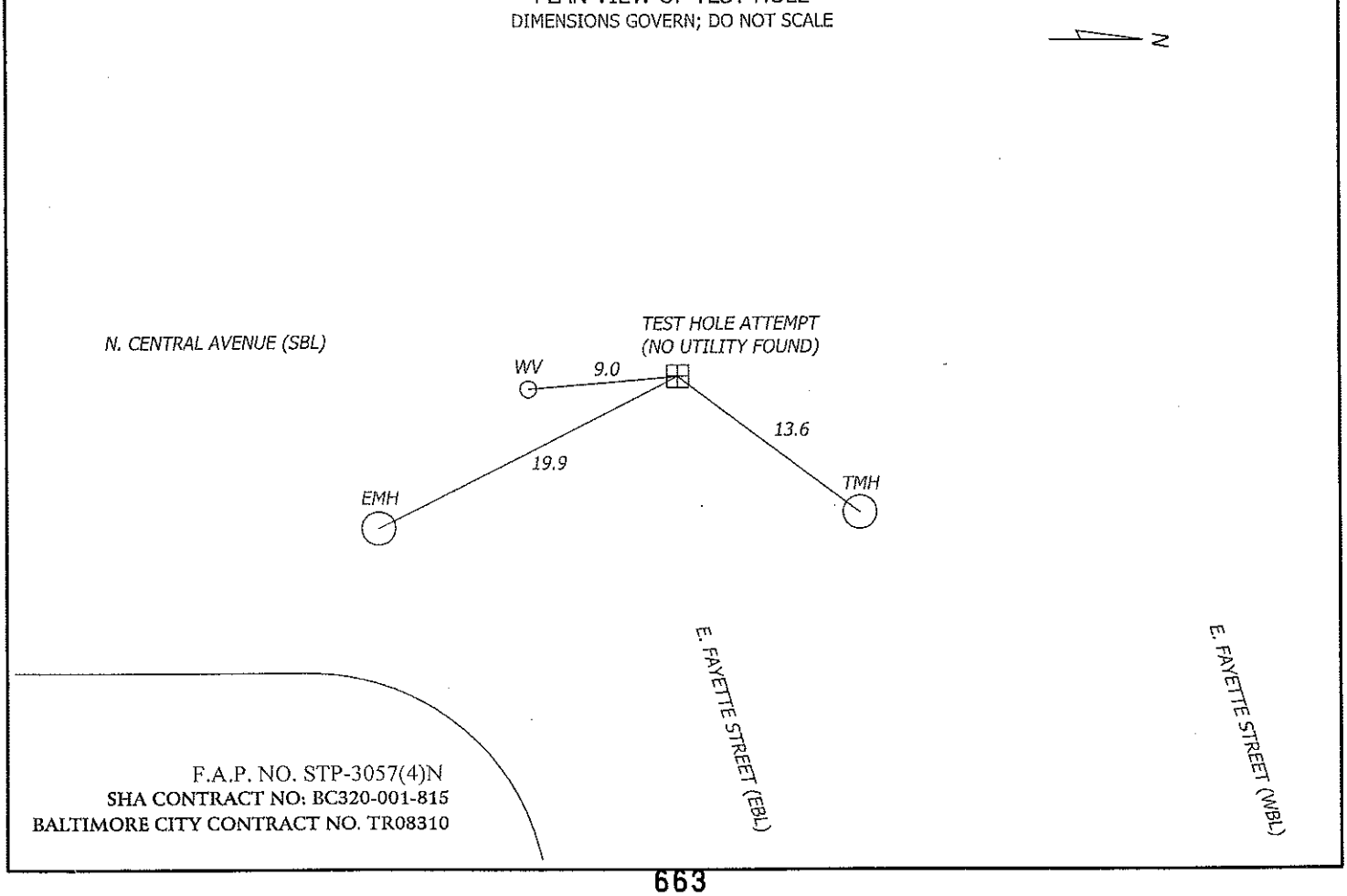

F.A.P. NO. STP-3057(4)N
SHA CONTRACT NO: BC320-001-815
BALTIMORE CITY CONTRACT NO. TR08310

A / I / DATA - TEST HOLE DATA SHEET

JOB #: 09134 TEST HOLE # : A09

PROJECT NAME:	CENTRAL AVENUE	EXCAVATION BY: A/I/DATA	DATE DUG: 12/23/09
PROJECT LOCATION:	BALTIMORE CITY, MARYLAND	FORM BY: TDM ASSISTED BY: GMC, TDL	CHECKED BY: SEW
CLIENT NAME:	WHITMAN REQUARDT AND ASSOCIATES, LLP	PAVING CONDITION:	GOOD
UTILITY REQUESTED:	18" STORM DRAIN	GENERAL SOIL CONDITIONS:	SOFT MOIST CLAY ROCKY
UTILITY FOUND:	CAST IN PLACE CONCRETE (SEE NOTE)	UTILITY CONDITION:	GOOD
		MARKER SURVEYED BY:	A/I/DATA

SECTION VIEW OF TEST HOLE

NOT TO SCALE

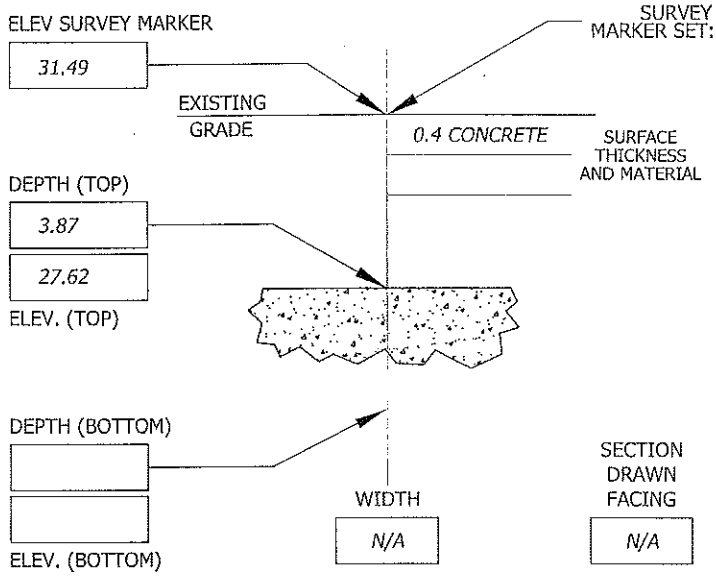

SURVEY MARKER SET: CHIS "X" ABOVE: TOP OF UTILITY MARKING TAPE INSTALLED: PINK

CONTROL POINTS PROVIDED BY: WHITMAN REQUARDT AND ASSOCIATES, LLP

105	N= -2202.90	E= 4545.83	ELEV= 27.43
106	N= -1748.30	E= 4524.82	ELEV= 32.27

A/I/DATA MARKER:	NORTHING	EASTING	ELEVATION
	-1667.06	4469.51	31.49

NOTES:
TEST HOLE REVEALED A ROUGH POUR CONCRETE IN ALL DIRECTIONS THAT IS BELIEVED TO BE PART OF A STORM DRAIN JUNCTION BOX.

TEST HOLE DATA PRODUCED BY:
ACCURATE INFRASTRUCTURE DATA, INC.
1100 BATAVIA FARM ROAD, SUITE 200, BALTIMORE, MD 21237
PH: 410-686-5091 FAX: 410-686-5093
ALL MEASUREMENTS ARE SHOWN IN DECIMAL FEET EXCEPT WHERE NOTED

PLAN VIEW OF TEST HOLE

DIMENSIONS GOVERN; DO NOT SCALE

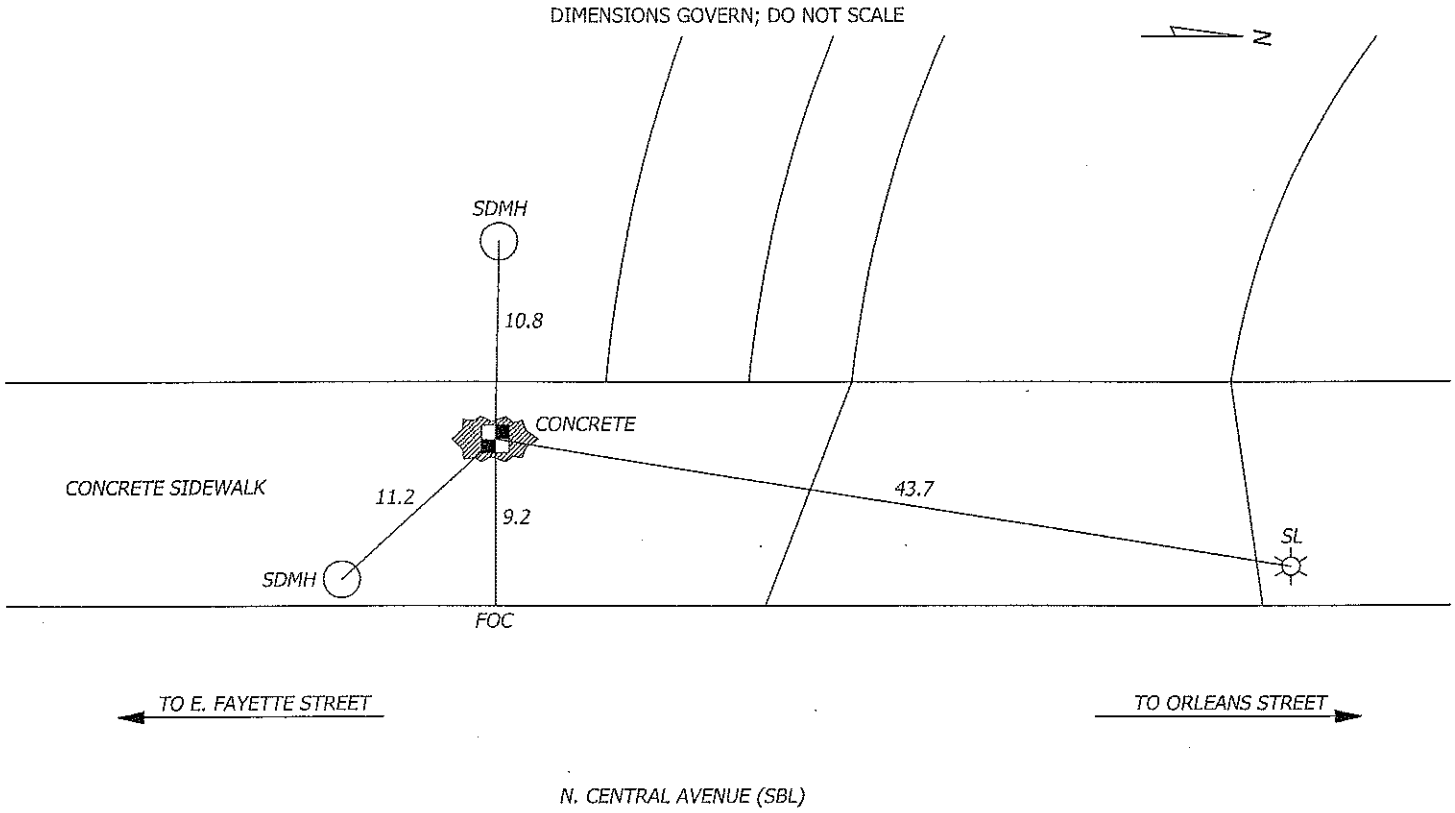

F.A.P. NO. STP-3057(4)N
SHA CONTRACT NO: BC320-001-815
BALTIMORE CITY CONTRACT NO. TR08310

A / I / DATA - TEST HOLE DATA SHEET

JOB #: 09134 TEST HOLE # : A10

PROJECT NAME:	CENTRAL AVENUE	EXCAVATION BY: A/I/DATA	DATE DUG: 12/30/09
PROJECT LOCATION:	BALTIMORE CITY, MARYLAND	FORM BY: RRB ASSISTED BY: JMK, GMC	CHECKED BY: SEW
CLIENT NAME:	WHITMAN REQUARDT AND ASSOCIATES, LLP	PAVING CONDITION:	FAIR
UTILITY REQUESTED:	WATER	GENERAL SOIL CONDITIONS:	SOFT MOIST SAND
UTILITY FOUND:	8" DUCTILE IRON WATER	UTILITY CONDITION:	GOOD
		MARKER SURVEYED BY:	A/I/DATA

SECTION VIEW OF TEST HOLE

NOT TO SCALE

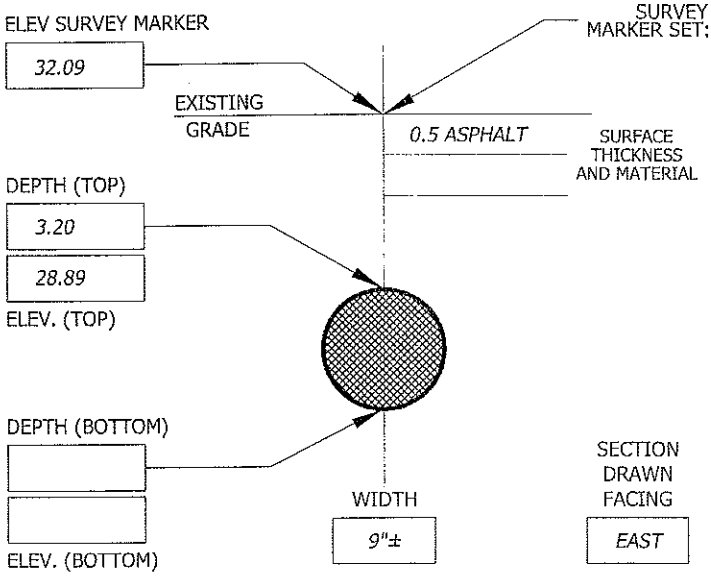

SURVEY MARKER SET: PK NAIL ABOVE: CROWN OF UTILITY MARKING TAPE INSTALLED: BLUE

CONTROL POINTS PROVIDED BY: WHITMAN REQUARDT AND ASSOCIATES, LLP

105	N= -2202.90	E= 4545.83	ELEV= 27.43
106	N= -1748.30	E= 4524.82	ELEV= 32.27

A/I/DATA MARKER:	NORTHING	EASTING	ELEVATION
	-1482.65	4472.79	32.09

NOTES:

TEST HOLE DATA PRODUCED BY:
ACCURATE INFRASTRUCTURE DATA, INC.
1100 BATAVIA FARM ROAD, SUITE 200, BALTIMORE, MD 21237
PH: 410-686-5091 FAX: 410-686-5093
ALL MEASUREMENTS ARE SHOWN IN DECIMAL FEET EXCEPT WHERE NOTED

PLAN VIEW OF TEST HOLE

DIMENSIONS GOVERN; DO NOT SCALE

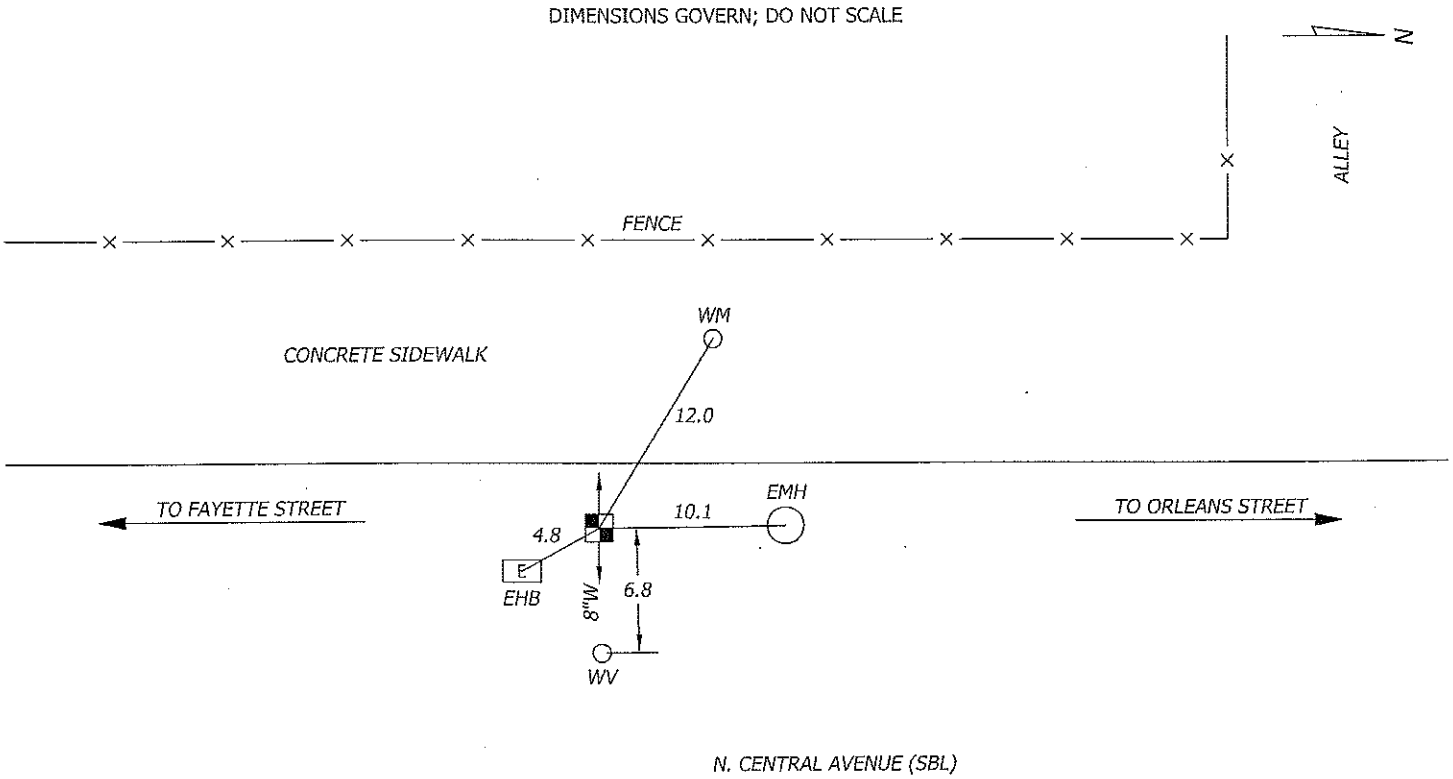

F.A.P. NO. STP-3057(4)N
SHA CONTRACT NO: BC320-001-815
BALTIMORE CITY CONTRACT NO. TR08310

A / I / DATA - TEST HOLE DATA SHEET

JOB #: 09134 TEST HOLE # : A12

PROJECT NAME:	CENTRAL AVENUE	EXCAVATION BY: A/I/DATA	DATE DUG: 12/16/09
PROJECT LOCATION:	BALTIMORE CITY, MARYLAND	FORM BY: RRB ASSISTED BY: CRB, TDL, MDI	CHECKED BY: SEW
CLIENT NAME:	WHITMAN REQUARDT AND ASSOCIATES, LLP	PAVING CONDITION:	FAIR
UTILITY REQUESTED:	6" GAS	GENERAL SOIL CONDITIONS:	SOFT MOIST SAND CLAY
UTILITY FOUND:	6" WRAPPED STEEL GAS	UTILITY CONDITION:	GOOD
		MARKER SURVEYED BY:	A/I/DATA

SECTION VIEW OF TEST HOLE

NOT TO SCALE

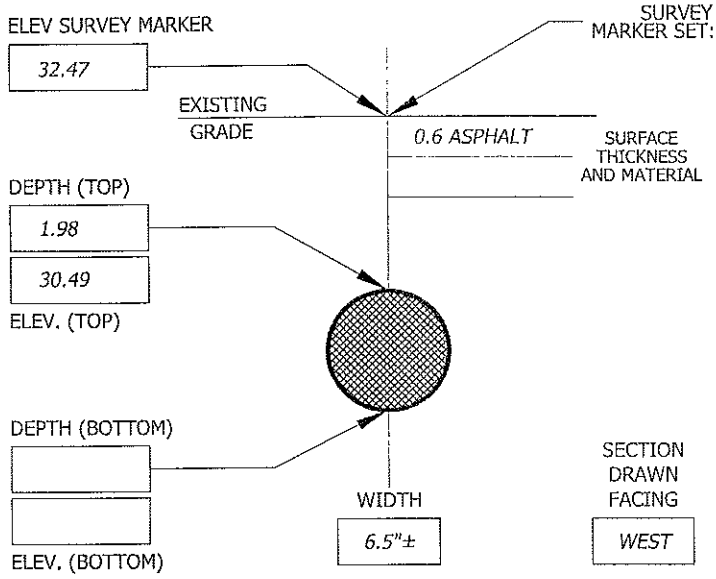

SURVEY MARKER SET: PK NAIL ABOVE: CROWN OF UTILITY MARKING TAPE INSTALLED: YELLOW

CONTROL POINTS PROVIDED BY: WHITMAN REQUARDT AND ASSOCIATES, LLP

105	N= -2202.90	E= 4545.83	ELEV= 27.43
106	N= -1748.30	E= 4524.82	ELEV= 32.27

A/I/DATA MARKER:	NORTHING	EASTING	ELEVATION
	-1419.66	4469.70	32.47

NOTES:

TEST HOLE DATA PRODUCED BY:
ACCURATE INFRASTRUCTURE DATA, INC.
1100 BATAVIA FARM ROAD, SUITE 200, BALTIMORE, MD 21237
PH: 410-686-5091 FAX: 410-686-5093
ALL MEASUREMENTS ARE SHOWN IN DECIMAL FEET EXCEPT WHERE NOTED

PLAN VIEW OF TEST HOLE

DIMENSIONS GOVERN; DO NOT SCALE

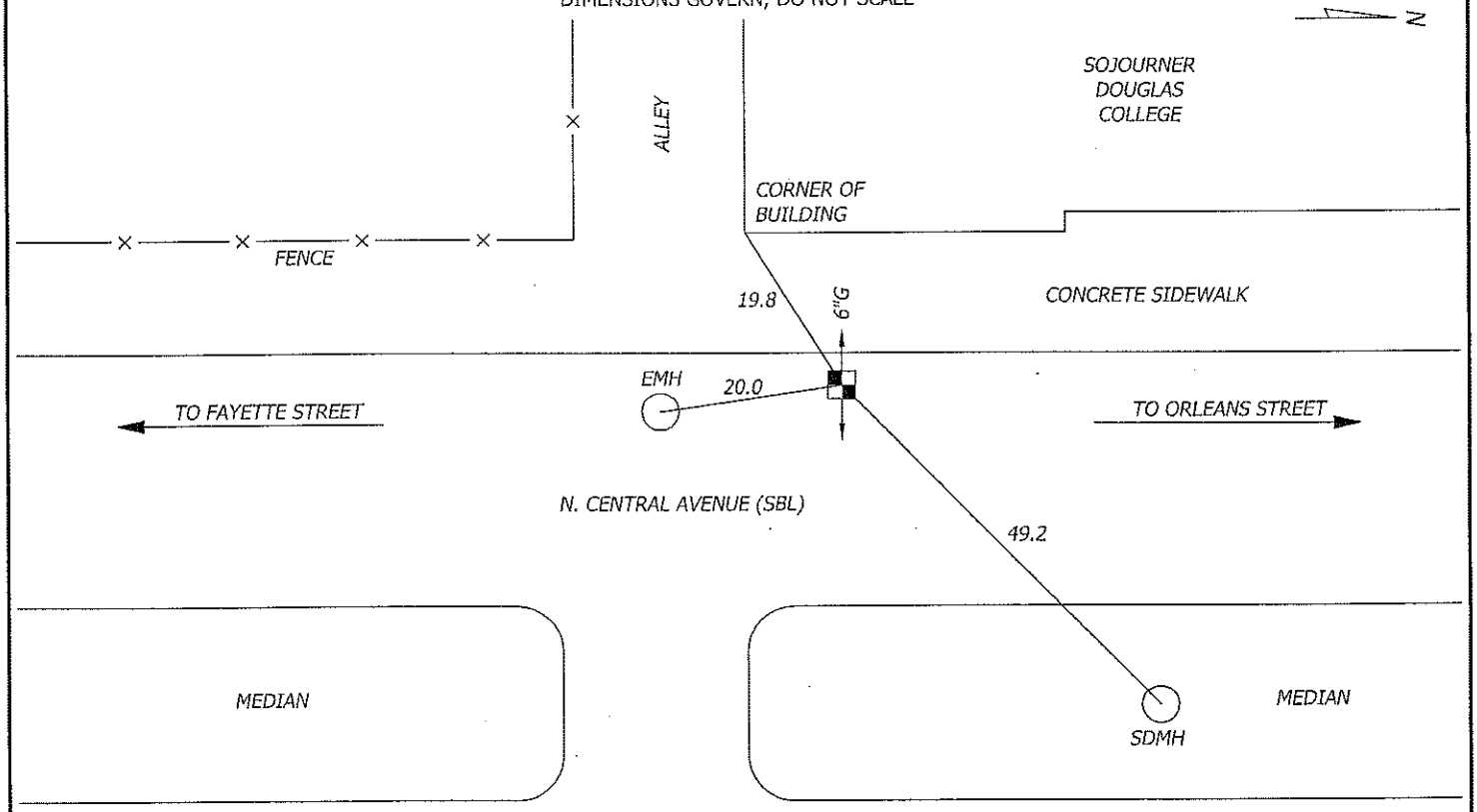

F.A.P. NO. STP-3057(4)N
SHA CONTRACT NO: BC320-001-815
BALTIMORE CITY CONTRACT NO. TR08310

A / I / DATA - TEST HOLE DATA SHEET

JOB #: 09134 TEST HOLE # : A13

PROJECT NAME:	CENTRAL AVENUE	EXCAVATION BY: A/I/DATA	DATE DUG: 12/11/09
PROJECT LOCATION:	BALTIMORE CITY, MARYLAND	FORM BY: MCG ASSISTED BY: KLS, CRB	CHECKED BY: SEW
CLIENT NAME:	WHITMAN REQUARDT AND ASSOCIATES, LLP	PAVING CONDITION:	GOOD
UTILITY REQUESTED:	4" WATER / 18" STORM DRAIN	GENERAL SOIL CONDITIONS:	SOFT MOIST SAND ROCKY
UTILITY FOUND:	4" CAST IRON WATER	UTILITY CONDITION:	GOOD
		MARKER SURVEYED BY:	A/I/DATA

SECTION VIEW OF TEST HOLE

NOT TO SCALE

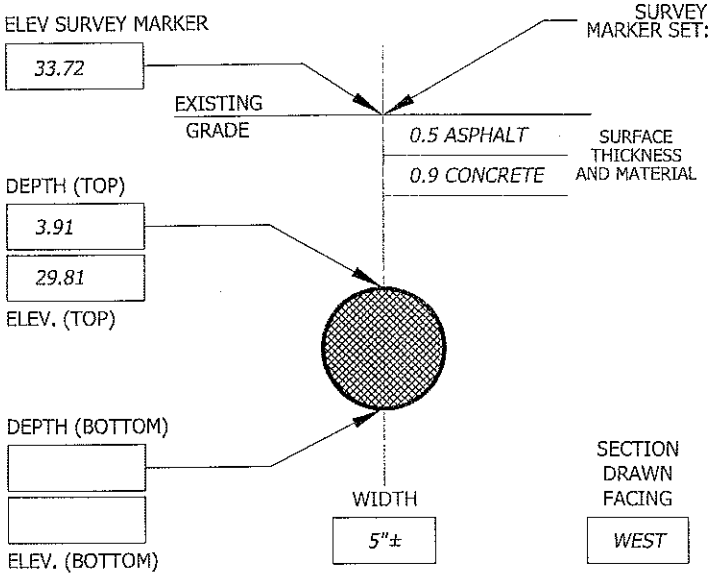

SURVEY MARKER SET: PK NAIL ABOVE: CROWN OF UTILITY MARKING TAPE INSTALLED: BLUE

CONTROL POINTS PROVIDED BY: WHITMAN REQUARDT AND ASSOCIATES, LLP

105	N= -2202.90	E= 4545.83	ELEV= 27.43
106	N= -1748.30	E= 4524.82	ELEV= 32.27

A/I/DATA MARKER:	NORTHING	EASTING	ELEVATION
	-1302.34	4527.47	33.72

NOTES:
UNABLE TO EXPOSE BOTH REQUESTED UTILITIES IN SINGLE TEST HOLE. SEE TEST HOLE DATA REPORT #13A FOR INFORMATION ON ADDITIONALLY REQUESTED 18" STORM DRAIN.

TEST HOLE DATA PRODUCED BY:
ACCURATE INFRASTRUCTURE DATA, INC.
1100 BATAVIA FARM ROAD, SUITE 200, BALTIMORE, MD 21237
PH: 410-686-5091 FAX: 410-686-5093
ALL MEASUREMENTS ARE SHOWN IN DECIMAL FEET EXCEPT WHERE NOTED

PLAN VIEW OF TEST HOLE

DIMENSIONS GOVERN; DO NOT SCALE

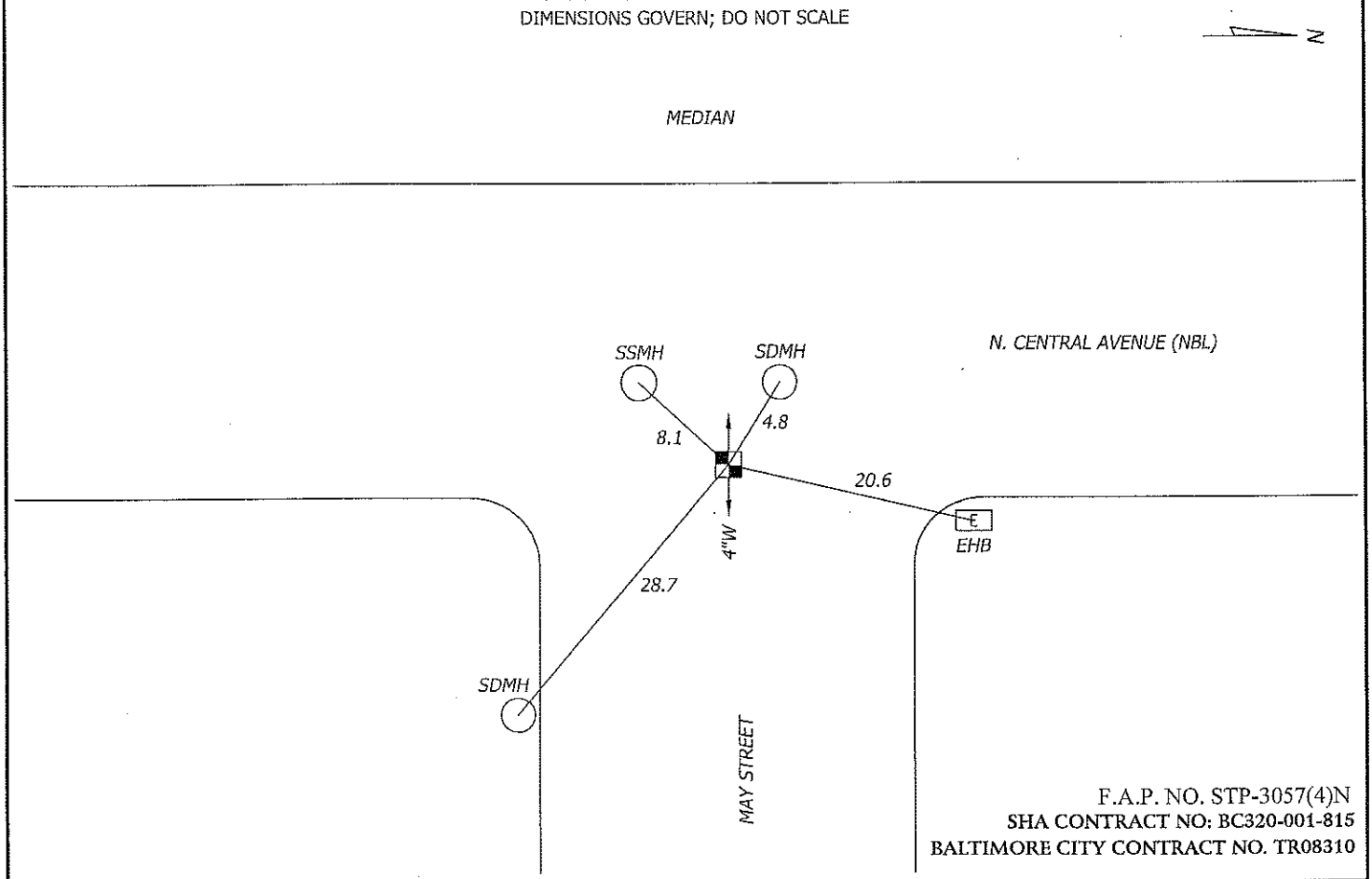

F.A.P. NO. STP-3057(4)N
SHA CONTRACT NO: BC320-001-815
BALTIMORE CITY CONTRACT NO. TR08310

A / I / DATA - TEST HOLE DATA SHEET

JOB #: 09134 TEST HOLE # : A13A

PROJECT NAME:	CENTRAL AVENUE	EXCAVATION BY: A/I/DATA	DATE DUG: 12/11/09
PROJECT LOCATION:	BALTIMORE CITY, MARYLAND	FORM BY: MCG ASSISTED BY: KLS, CRB	CHECKED BY: SEW
CLIENT NAME:	WHITMAN REQUARDT AND ASSOCIATES, LLP	PAVING CONDITION:	GOOD
UTILITY REQUESTED:	4" WATER / 18" STORM DRAIN	GENERAL SOIL CONDITIONS:	SOFT MOIST SAND ROCKY
UTILITY FOUND:	CLAY STORM DRAIN PIPE (SEE NOTE)	UTILITY CONDITION:	GOOD
		MARKER SURVEYED BY:	A/I/DATA

SECTION VIEW OF TEST HOLE

NOT TO SCALE

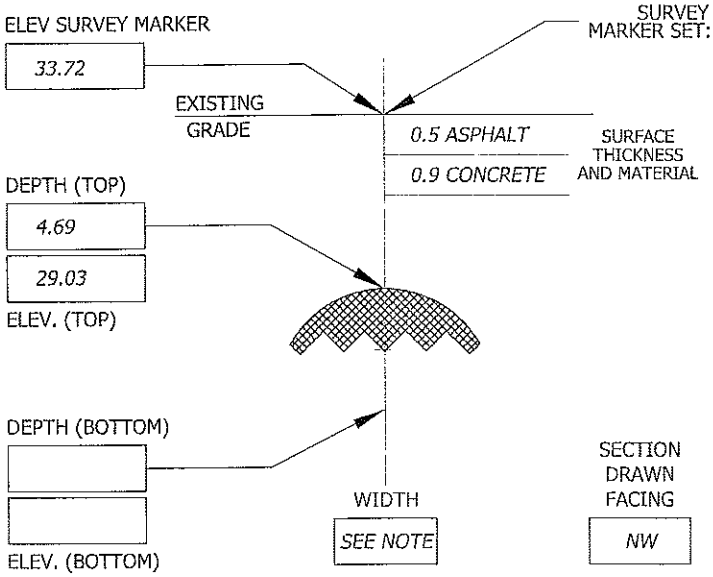

SURVEY MARKER SET: PK NAIL ABOVE: SEE NOTE OF UTILITY MARKING TAPE INSTALLED: GREEN

CONTROL POINTS PROVIDED BY: WHITMAN REQUARDT AND ASSOCIATES, LLP

105	N= -2202.90	E= 4545.83	ELEV= 27.43
106	N= -1748.30	E= 4524.82	ELEV= 32.27

A/I/DATA MARKER:	NORTHING	EASTING	ELEVATION
	-1301.56	4527.84	33.72

NOTES:
UNABLE TO EXPOSE BOTH REQUESTED UTILITIES IN SINGLE TEST HOLE. SEE TEST HOLE DATA REPORT #13 FOR INFORMATION ON ADDITIONALLY REQUESTED 4" WATER. UNABLE TO OBTAIN SIZE OF EXPOSED PIPE DUE TO LARGE SIZE OF PIPE AND LIMITED SIZE OF TEST HOLE. PLANS INDICATE AN 18" PIPE AT THIS LOCATION. PK NAIL SET OVER APPROXIMATE CROWN OF PIPE.

TEST HOLE DATA PRODUCED BY:
ACCURATE INFRASTRUCTURE DATA, INC.
1100 BATAVIA FARM ROAD, SUITE 200, BALTIMORE, MD 21237
PH: 410-686-5091 FAX: 410-686-5093

ALL MEASUREMENTS ARE SHOWN IN DECIMAL FEET EXCEPT WHERE NOTED

PLAN VIEW OF TEST HOLE

DIMENSIONS GOVERN; DO NOT SCALE

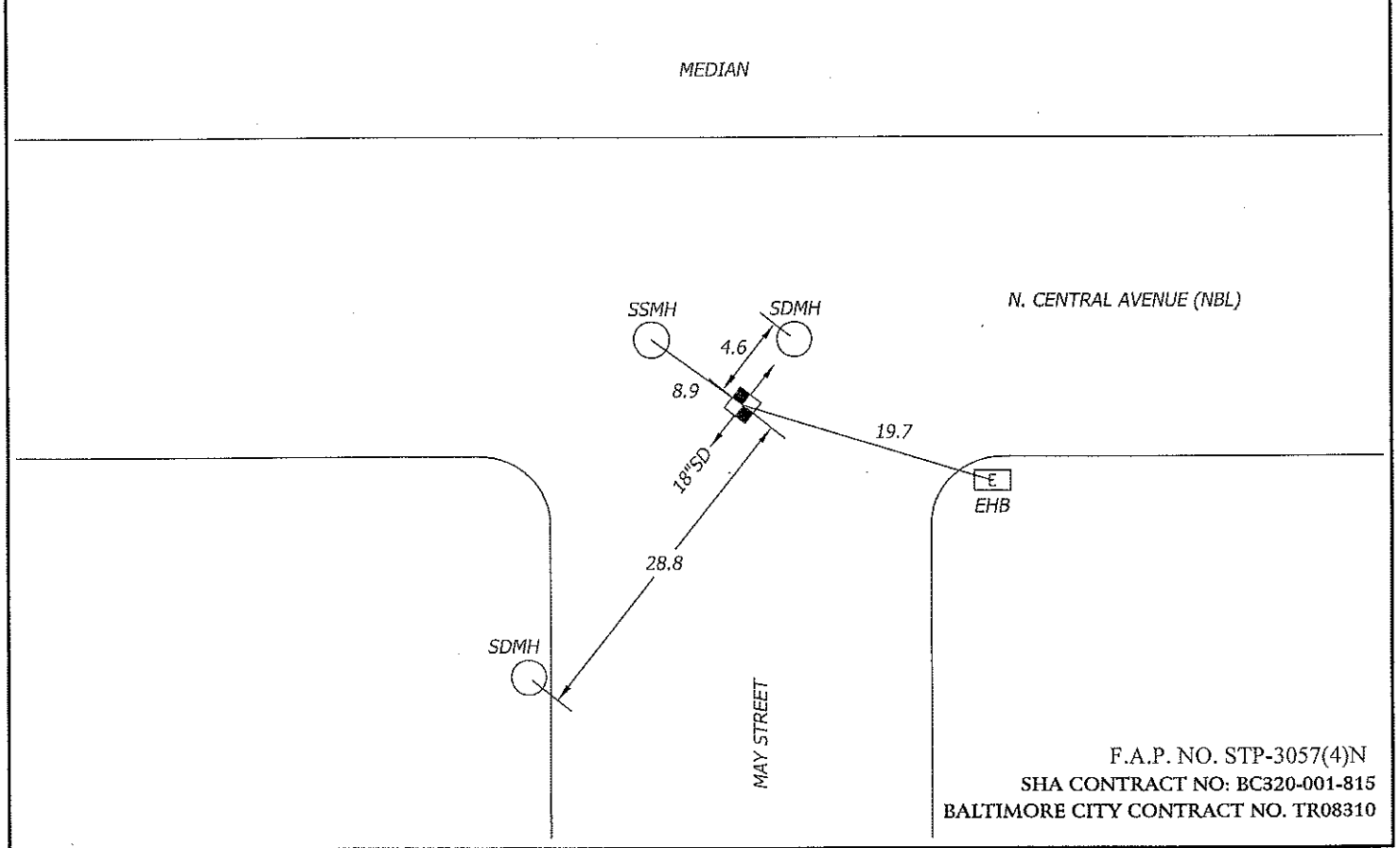

F.A.P. NO. STP-3057(4)N
SHA CONTRACT NO: BC320-001-815
BALTIMORE CITY CONTRACT NO. TR08310

A / I / DATA - TEST HOLE DATA SHEET

JOB #: 09134 TEST HOLE # : A14

PROJECT NAME:	CENTRAL AVENUE	EXCAVATION BY: A/I/DATA	DATE DUG: 12/17/09
PROJECT LOCATION:	BALTIMORE CITY, MARYLAND	FORM BY: TDM ASSISTED BY: MCG, JMK	CHECKED BY: SEW
CLIENT NAME:	WHITMAN REQUARDT AND ASSOCIATES, LLP	PAVING CONDITION:	GOOD
UTILITY REQUESTED:	15" STORM DRAIN	GENERAL SOIL CONDITIONS:	SOFT MOIST CLAY ROCKY
UTILITY FOUND:	15" RCP STORM DRAIN	UTILITY CONDITION:	GOOD
		MARKER SURVEYED BY:	A/I/DATA

SECTION VIEW OF TEST HOLE

NOT TO SCALE

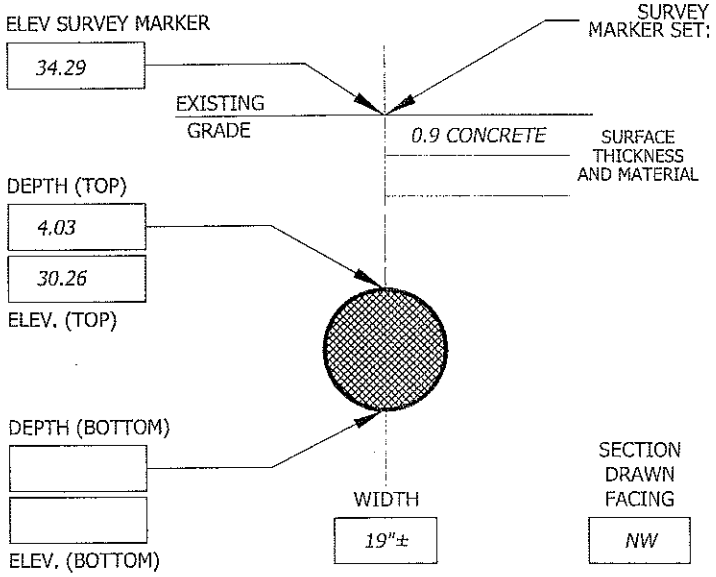

SURVEY MARKER SET: CHIS "X" ABOVE: CROWN OF UTILITY MARKING TAPE INSTALLED: GREEN

CONTROL POINTS PROVIDED BY: WHITMAN REQUARDT AND ASSOCIATES, LLP

105	N= -2202.90	E= 4545.83	ELEV= 27.43
106	N= -1748.30	E= 4524.82	ELEV= 32.27

A/I/DATA MARKER:	NORTHING	EASTING	ELEVATION
	-1138.31	4527.83	34.29

NOTES:

TEST HOLE DATA PRODUCED BY:
ACCURATE INFRASTRUCTURE DATA, INC.
1100 BATAVIA FARM ROAD, SUITE 200, BALTIMORE, MD 21237
PH: 410-686-5091 FAX: 410-686-5093
ALL MEASUREMENTS ARE SHOWN IN DECIMAL FEET EXCEPT WHERE NOTED

PLAN VIEW OF TEST HOLE

DIMENSIONS GOVERN; DO NOT SCALE

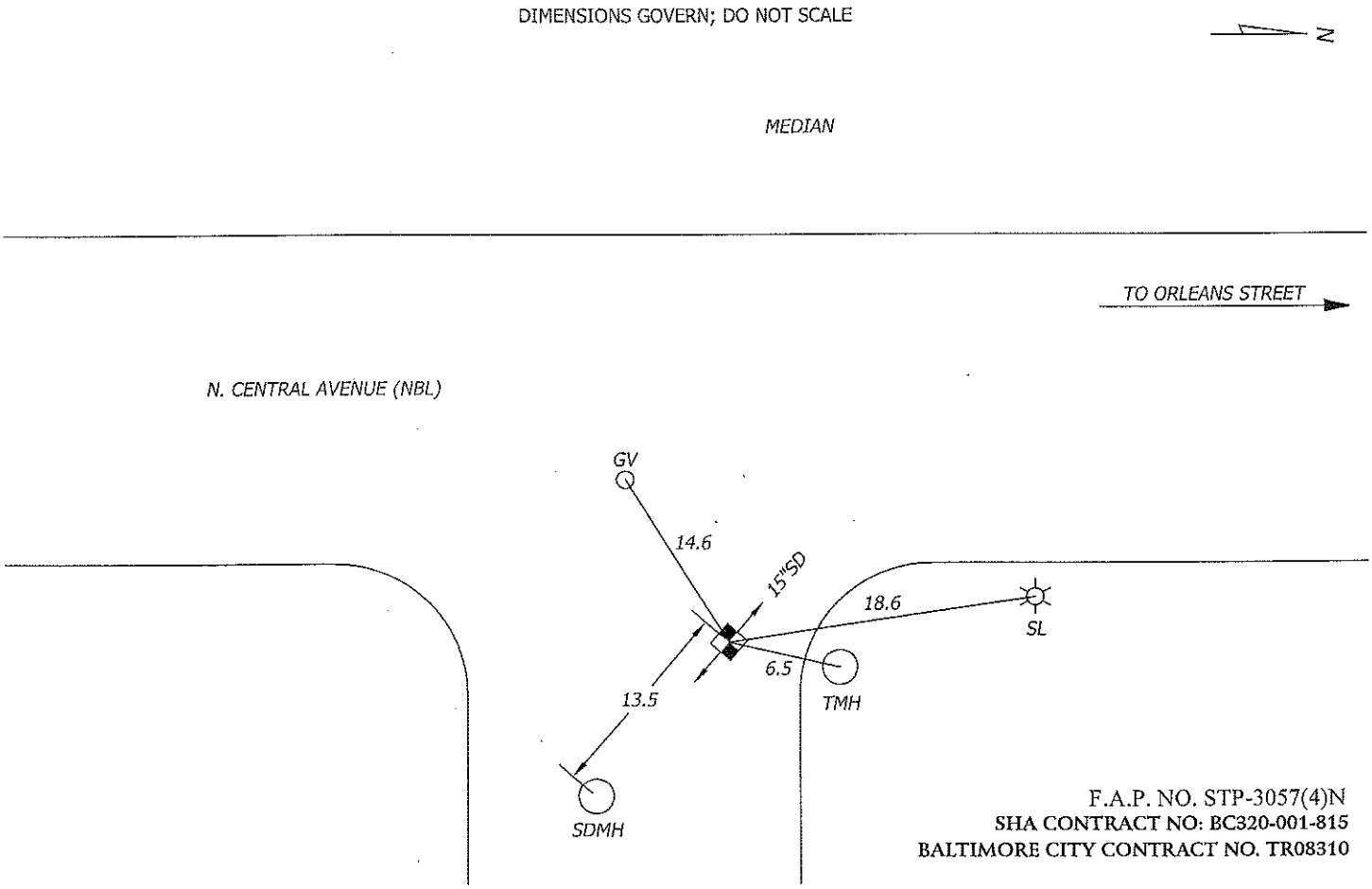

F.A.P. NO. STP-3057(4)N
SHA CONTRACT NO: BC320-001-815
BALTIMORE CITY CONTRACT NO. TR08310

A / I / DATA - TEST HOLE DATA SHEET

JOB #: *09134* TEST HOLE # : *A15*

PROJECT NAME:	*CENTRAL AVENUE*	EXCAVATION BY: *A/I/DATA*	DATE DUG: *12/17/09*
PROJECT LOCATION:	*BALTIMORE CITY, MARYLAND*	FORM BY: *TDM* ASSISTED BY: *MCG, JMK*	CHECKED BY: *SEW*
CLIENT NAME:	*WHITMAN REQUARDT AND ASSOCIATES, LLP*	PAVING CONDITION:	*GOOD*
UTILITY REQUESTED:	*TELEPHONE*	GENERAL SOIL CONDITIONS:	*HARD MOIST CLAY ROCKY*
UTILITY FOUND:	*CAST IN PLACE CONCRETE TELEPHONE DUCT*	UTILITY CONDITION:	*GOOD*
		MARKER SURVEYED BY:	*A/I/DATA*

SECTION VIEW OF TEST HOLE

NOT TO SCALE

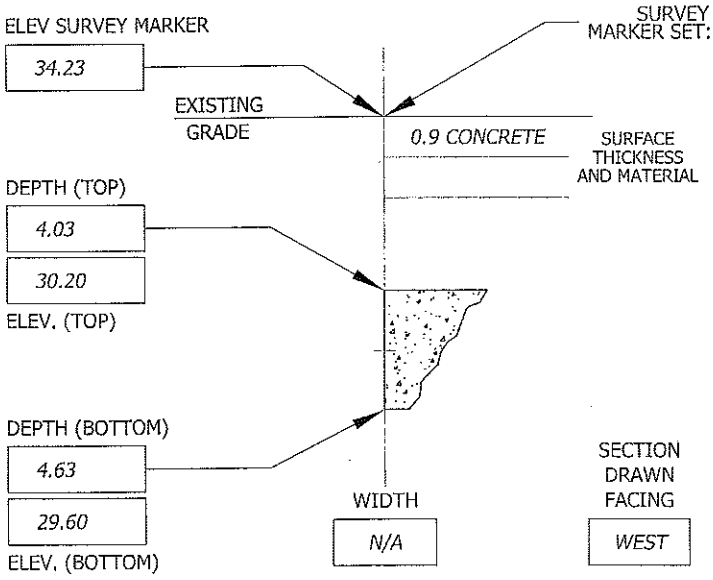

SURVEY MARKER SET: *CHIS "X"* ABOVE: *EDGE* OF UTILITY MARKING TAPE INSTALLED: *ORANGE*

CONTROL POINTS PROVIDED BY: *WHITMAN REQUARDT AND ASSOCIATES, LLP*

105	*N= -2202.90*	*E= 4545.83*	*ELEV= 27.43*
106	*N= -1748.30*	*E= 4524.82*	*ELEV= 32.27*

A/I/DATA MARKER:	*NORTHING*	*EASTING*	*ELEVATION*
	-1134.41	*4528.51*	*34.23*

NOTES:
CHIS "X" SET OVER SOUTH EDGE OF DUCT.

TEST HOLE DATA PRODUCED BY:
ACCURATE INFRASTRUCTURE DATA, INC.
1100 BATAVIA FARM ROAD, SUITE 200, BALTIMORE, MD 21237
PH: 410-686-5091 FAX: 410-686-5093
ALL MEASUREMENTS ARE SHOWN IN DECIMAL FEET EXCEPT WHERE NOTED

PLAN VIEW OF TEST HOLE

DIMENSIONS GOVERN; DO NOT SCALE

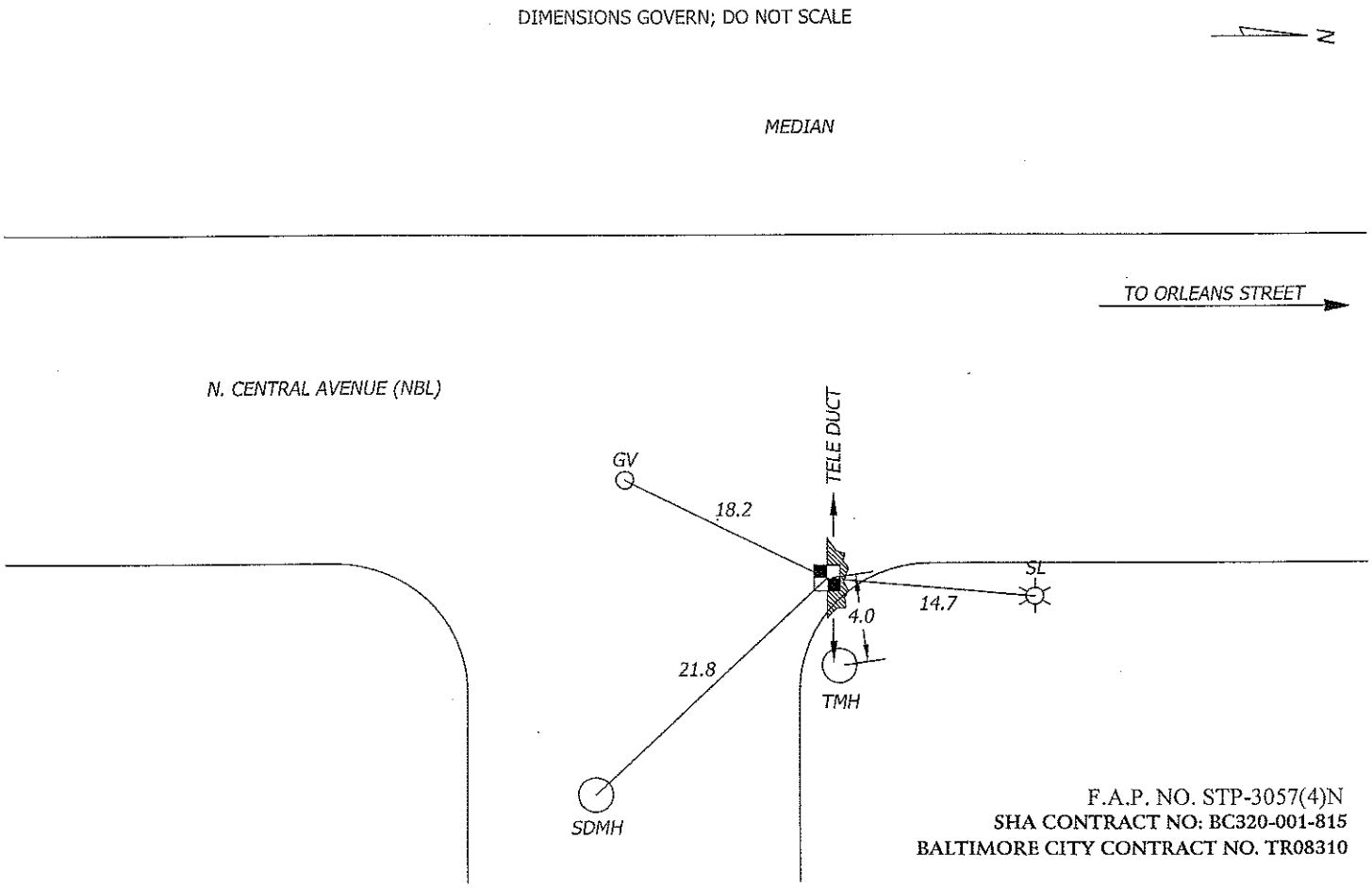

F.A.P. NO. STP-3057(4)N
SHA CONTRACT NO: BC320-001-815
BALTIMORE CITY CONTRACT NO. TR08310

A / I / DATA - TEST HOLE DATA SHEET

JOB #: 09134 TEST HOLE # : A15A

PROJECT NAME:	CENTRAL AVENUE	EXCAVATION BY: A/I/DATA	DATE DUG: 12/17/09
PROJECT LOCATION:	BALTIMORE CITY, MARYLAND	FORM BY: TDM ASSISTED BY: MCG, JMK	CHECKED BY: SEW
CLIENT NAME:	WHITMAN REQUARDT AND ASSOCIATES, LLP	PAVING CONDITION:	GOOD
UTILITY REQUESTED:	6" WATER	GENERAL SOIL CONDITIONS:	HARD DRY CLAY ROCKY
UTILITY FOUND:	6" CAST IRON WATER	UTILITY CONDITION:	POOR
		MARKER SURVEYED BY:	A/I/DATA

SECTION VIEW OF TEST HOLE

NOT TO SCALE

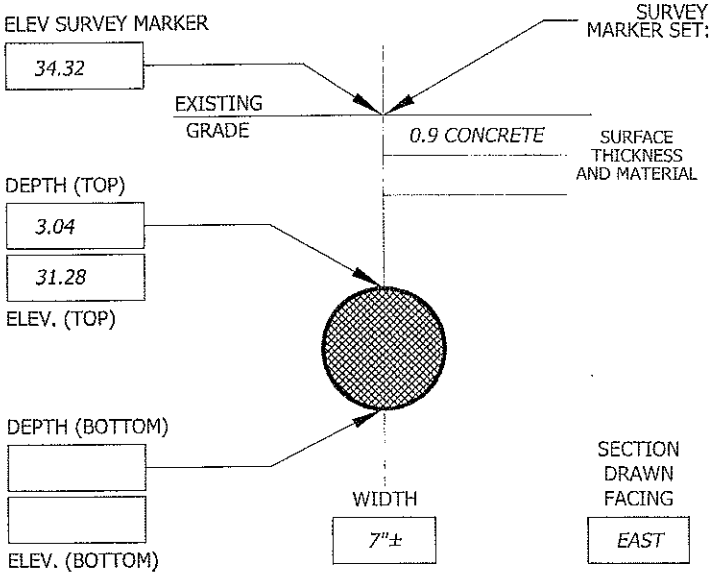

SURVEY MARKER SET: CHIS "X" ABOVE: CROWN OF UTILITY MARKING TAPE INSTALLED: BLUE

CONTROL POINTS PROVIDED BY: WHITMAN REQUARDT AND ASSOCIATES, LLP

105	N= -2202.90	E= 4545.83	ELEV= 27.43
106	N= -1748.30	E= 4524.82	ELEV= 32.27

A/I/DATA MARKER:	NORTHING	EASTING	ELEVATION
	-1138.19	4529.82	34.32

NOTES:
TEST HOLE REVEALED EXCESSIVE CORROSION ON PIPE.

TEST HOLE DATA PRODUCED BY:
ACCURATE INFRASTRUCTURE DATA, INC.
1100 BATAVIA FARM ROAD, SUITE 200, BALTIMORE, MD 21237
PH: 410-686-5091 FAX: 410-686-5093
ALL MEASUREMENTS ARE SHOWN IN DECIMAL FEET EXCEPT WHERE NOTED

PLAN VIEW OF TEST HOLE

DIMENSIONS GOVERN; DO NOT SCALE

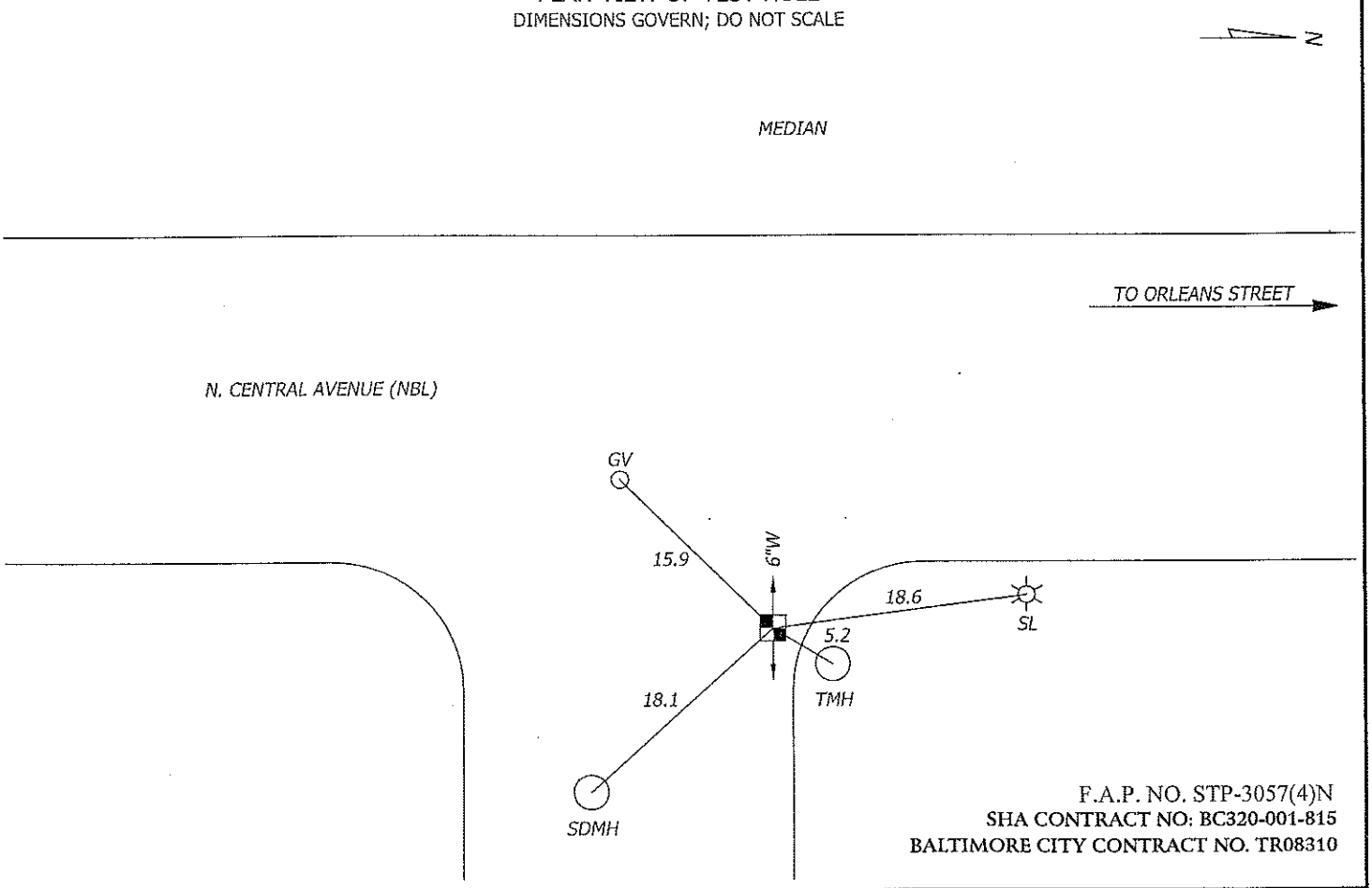

F.A.P. NO. STP-3057(4)N
SHA CONTRACT NO: BC320-001-815
BALTIMORE CITY CONTRACT NO. TR08310

A / I / DATA - TEST HOLE DATA SHEET

JOB #: 09134 TEST HOLE # : A16

PROJECT NAME:	CENTRAL AVENUE	EXCAVATION BY: A/I/DATA	DATE DUG: 12/23/09
PROJECT LOCATION:	BALTIMORE CITY, MARYLAND	FORM BY: RRB ASSISTED BY: CRB, JMK	CHECKED BY: SEW
CLIENT NAME:	WHITMAN REQUARDT AND ASSOCIATES, LLP	PAVING CONDITION:	POOR
UTILITY REQUESTED:	4" WATER AND 16"X14" STORM DRAIN	GENERAL SOIL CONDITIONS:	SOFT MOIST SAND ROCKY
UTILITY FOUND:	6" CAST IRON WATER	UTILITY CONDITION:	POOR
		MARKER SURVEYED BY:	A/I/DATA

SECTION VIEW OF TEST HOLE

NOT TO SCALE

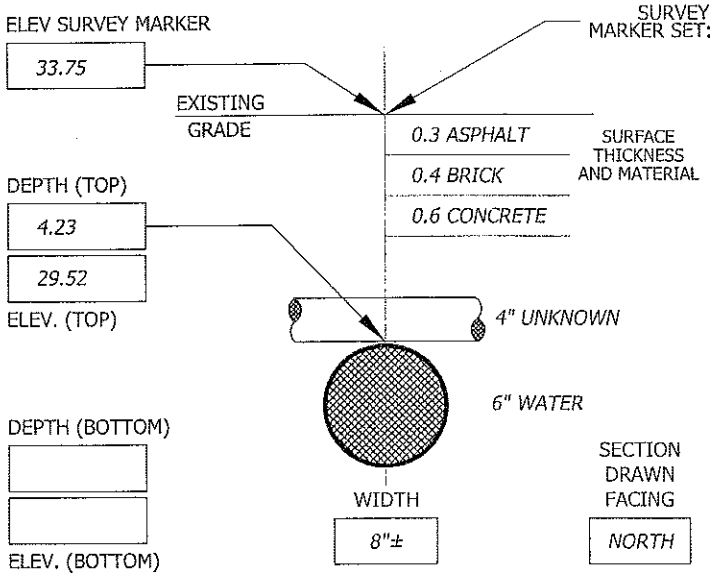

CONTROL POINTS PROVIDED BY: WHITMAN REQUARDT AND ASSOCIATES, LLP

105	N= -2202.90	E= 4545.83	ELEV= 27.43
106	N= -1748.30	E= 4524.82	ELEV= 32.27

A/I/DATA MARKER:	NORTHING	EASTING	ELEVATION
	-1140.74	4456.57	33.75

NOTES:

TEST HOLE ALSO REVEALED A 4" UNKNOWN PIPE RUNNING NORTH-SOUTH AT A DEPTH OF 3.64. TEST HOLE WAS ALSO TO INCLUDE A 16" x 14" STORM DRAIN PIPE. PROBED TO A DEPTH OF 9'±. UNABLE TO EXPOSE THE STORM DRAIN DUE TO CONGESTION OF UTILITIES IN TEST HOLE.

TEST HOLE DATA PRODUCED BY:
ACCURATE INFRASTRUCTURE DATA, INC.
1100 BATAVIA FARM ROAD, SUITE 200, BALTIMORE, MD 21237
PH: 410-686-5091 FAX: 410-686-5093
ALL MEASUREMENTS ARE SHOWN IN DECIMAL FEET EXCEPT WHERE NOTED

PLAN VIEW OF TEST HOLE

DIMENSIONS GOVERN; DO NOT SCALE

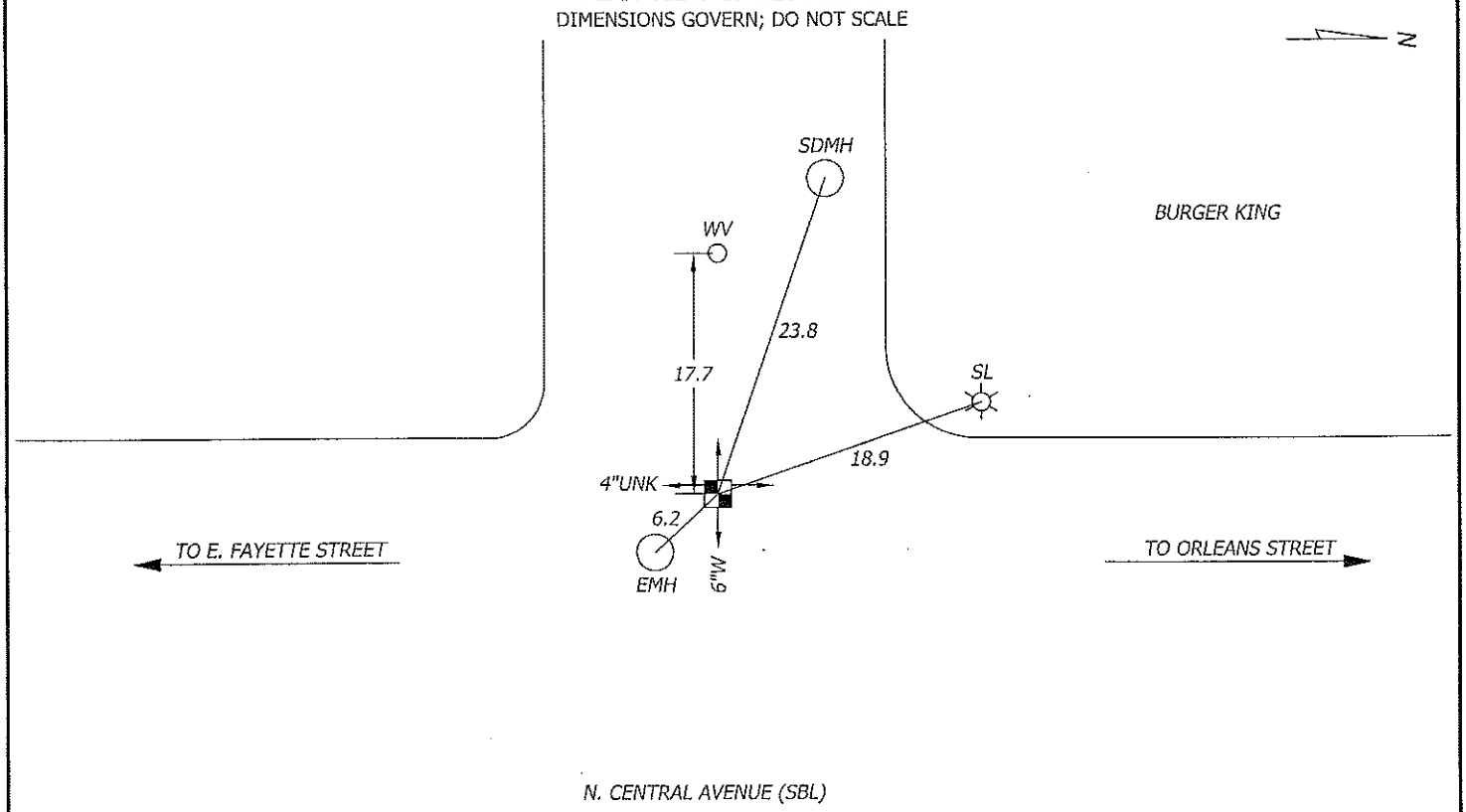

F.A.P. NO. STP-3057(4)N
SHA CONTRACT NO: BC320-001-815
BALTIMORE CITY CONTRACT NO. TR08310

A / I / DATA - TEST HOLE DATA SHEET

JOB #: 09134 TEST HOLE # : A17

PROJECT NAME:	CENTRAL AVENUE	EXCAVATION BY: A/I/DATA	DATE DUG: 12/23/09
PROJECT LOCATION:	BALTIMORE CITY, MARYLAND	FORM BY: RRB ASSISTED BY: CRB, JMK	CHECKED BY: SEW
CLIENT NAME:	WHITMAN REQUARDT AND ASSOCIATES, LLP	PAVING CONDITION:	POOR
UTILITY REQUESTED:	18" STORM DRAIN	GENERAL SOIL CONDITIONS:	SOFT MOIST SAND ROCKY
UTILITY FOUND:	CONCRETE (SEE NOTE)	UTILITY CONDITION:	SEE NOTE
		MARKER SURVEYED BY:	A/I/DATA

SECTION VIEW OF TEST HOLE

NOT TO SCALE

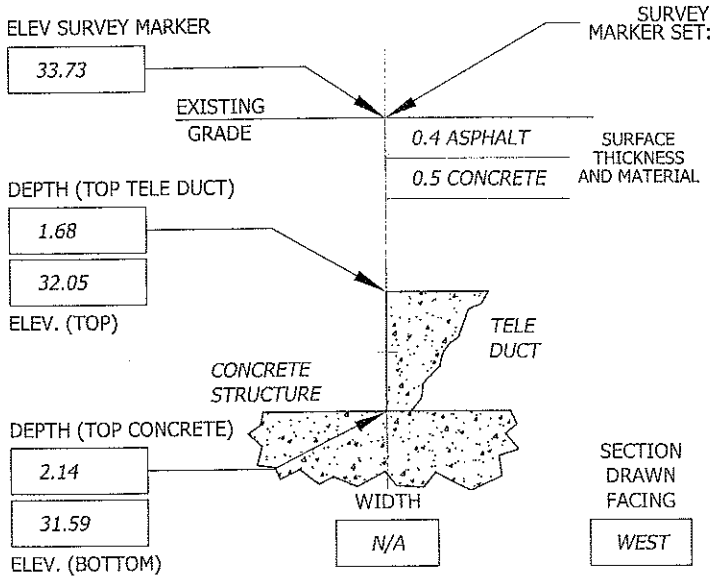

SURVEY MARKER SET: PK NAIL ABOVE: TOP OF UTILITY MARKING TAPE INSTALLED: GREEN

CONTROL POINTS PROVIDED BY: WHITMAN REQUARDT AND ASSOCIATES, LLP

105	N= -2202.90	E= 4545.83	ELEV= 27.43
106	N= -1748.30	E= 4524.82	ELEV= 32.27

A/I/DATA MARKER:	NORTHING	EASTING	ELEVATION
	-1138.60	4456.47	33.73

NOTES:
TEST HOLE REVEALED CONCRETE STRUCTURE BELIEVED TO BE RELATED TO THE REQUESTED STORM DRAIN. ABLE TO HEAR TEST HOLE ACTIVITY IN SDMH WEST OF TEST HOLE LOCATION. PK NAIL SET OVER SOUTH EDGE OF DUCT. TEST HOLE ALSO REVEALED THE SOUTH EDGE OF A TELEPHONE DUCT RUNNING EAST-WEST. SEE TEST HOLE DATA SHEET #A-42 FOR ADDITIONAL INFORMATION ON CONCRETE STRUCTURE AND NORTH EDGE OF DUCT.

TEST HOLE DATA PRODUCED BY:
ACCURATE INFRASTRUCTURE DATA, INC.
1100 BATAVIA FARM ROAD, SUITE 200, BALTIMORE, MD 21237
PH: 410-686-5091 FAX: 410-686-5093
ALL MEASUREMENTS ARE SHOWN IN DECIMAL FEET EXCEPT WHERE NOTED

PLAN VIEW OF TEST HOLE

DIMENSIONS GOVERN; DO NOT SCALE

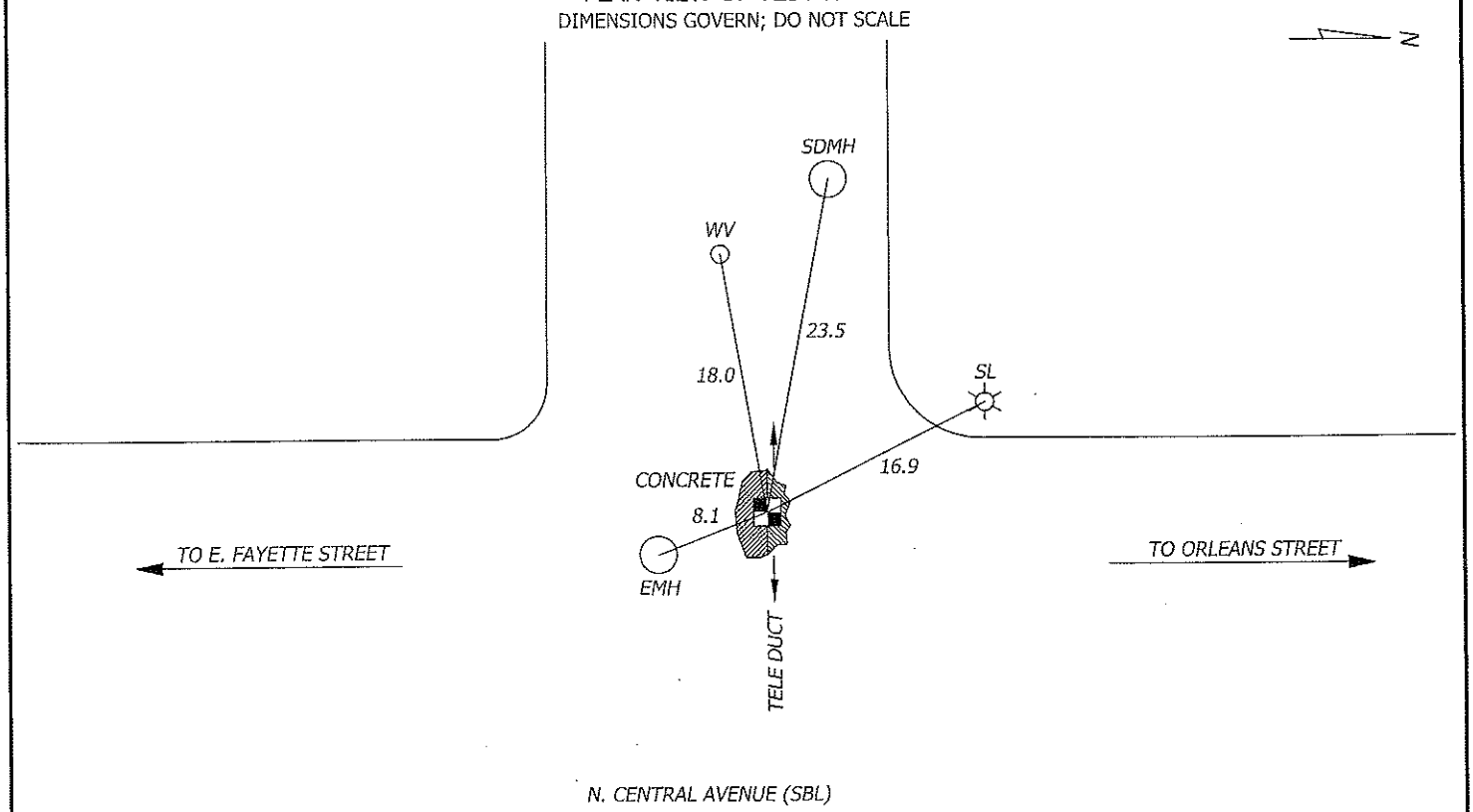

F.A.P. NO. STP-3057(4)N
SHA CONTRACT NO: BC320-001-815
BALTIMORE CITY CONTRACT NO. TR08310

A / I / DATA - TEST HOLE DATA SHEET

JOB #: 09134 TEST HOLE # : A18

PROJECT NAME:	CENTRAL AVENUE	EXCAVATION BY: A/I/DATA	DATE DUG: 12/16/09
PROJECT LOCATION:	BALTIMORE CITY, MARYLAND	FORM BY: TDM ASSISTED BY: MCG, JMK	CHECKED BY: SEW
CLIENT NAME:	WHITMAN REQUARDT AND ASSOCIATES, LLP	PAVING CONDITION:	GOOD
UTILITY REQUESTED:	STEAM / SANITARY	GENERAL SOIL CONDITIONS:	FLOW ASH
UTILITY FOUND:	NO UTILITY FOUND	UTILITY CONDITION:	N/A
		MARKER SURVEYED BY:	A/I/DATA

SECTION VIEW OF TEST HOLE

NOT TO SCALE

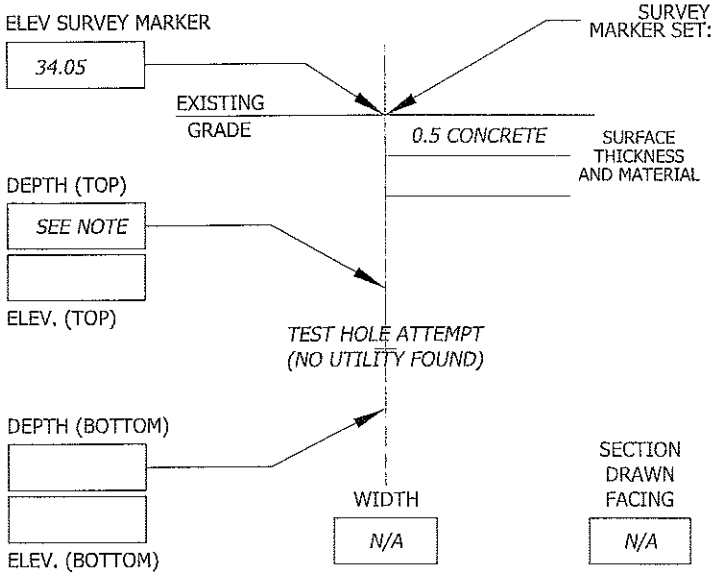

SURVEY MARKER SET: SEE NOTE ABOVE: N/A OF UTILITY MARKING TAPE INSTALLED: N/A

CONTROL POINTS PROVIDED BY: WHITMAN REQUARDT AND ASSOCIATES, LLP

105	N= -2202.90	E= 4545.83	ELEV= 27.43
106	N= -1748.30	E= 4524.82	ELEV= 32.27

A/I/DATA MARKER:	NORTHING	EASTING	ELEVATION
	-1069.82	4522.77	34.05

NOTES:
TEST HOLE PERFORMED AT CLIENT'S REQUESTED LOCATION. ENCOUNTERED HARD FLOW ASH AT A DEPTH OF 3.15'±. UNABLE TO CONTINUE EXCAVATING. NO UTILITY FOUND. NO SURVEY MARKER SET. ALL TIES AND SURVEY TAKEN TO CENTER OF HOLE.

TEST HOLE DATA PRODUCED BY:
ACCURATE INFRASTRUCTURE DATA, INC.
1100 BATAVIA FARM ROAD, SUITE 200, BALTIMORE, MD 21237
PH: 410-686-5091 FAX: 410-686-5093
ALL MEASUREMENTS ARE SHOWN IN DECIMAL FEET EXCEPT WHERE NOTED

PLAN VIEW OF TEST HOLE

DIMENSIONS GOVERN; DO NOT SCALE

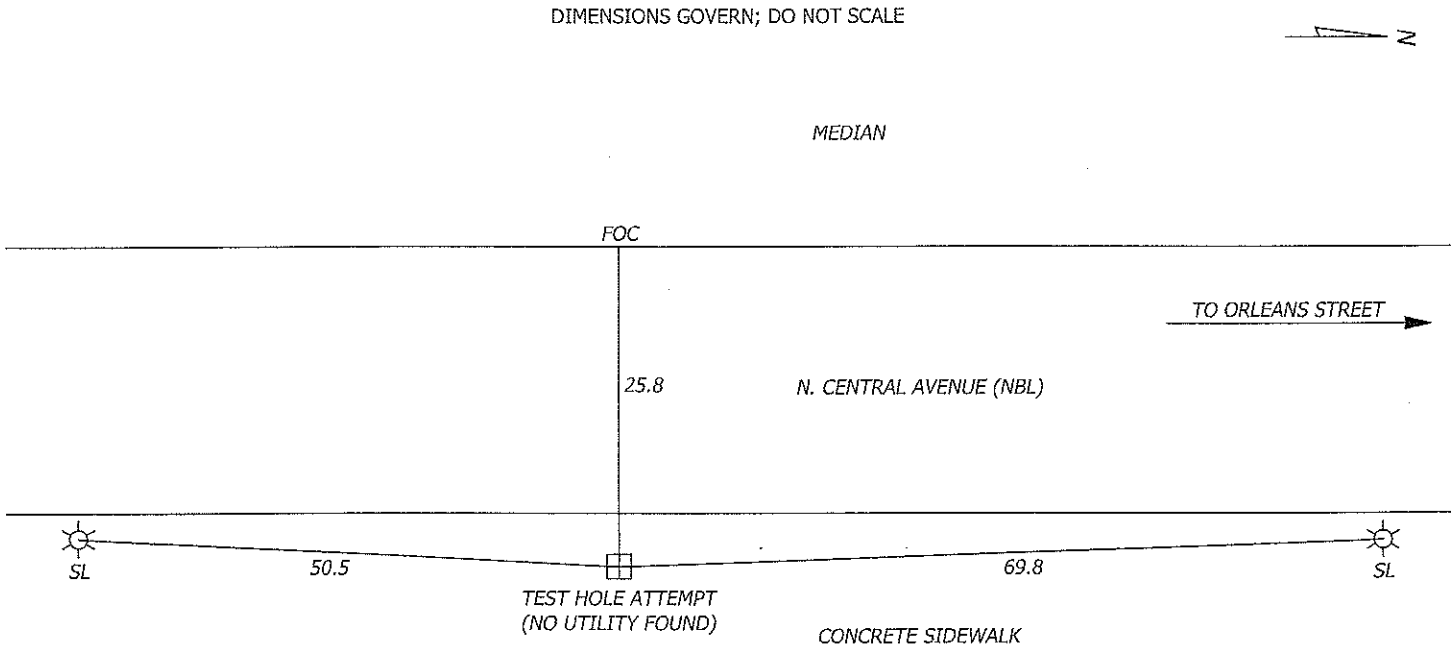

F.A.P. NO. STP-3057(4)N
SHA CONTRACT NO: BC320-001-815
BALTIMORE CITY CONTRACT NO. TR08310

A / I / DATA - TEST HOLE DATA SHEET

JOB #: 09134 TEST HOLE # : A19

PROJECT NAME:	CENTRAL AVENUE	EXCAVATION BY: A/I/DATA	DATE DUG: 12/16/09
PROJECT LOCATION:	BALTIMORE CITY, MARYLAND	FORM BY: TDM ASSISTED BY: MCG, JMK	CHECKED BY: SEW
CLIENT NAME:	WHITMAN REQUARDT AND ASSOCIATES, LLP	PAVING CONDITION:	GOOD
UTILITY REQUESTED:	3" GAS	GENERAL SOIL CONDITIONS:	SOFT MOIST SAND ROCKY
UTILITY FOUND:	3" WRAPPED STEEL GAS	UTILITY CONDITION:	GOOD
		MARKER SURVEYED BY:	A/I/DATA

SECTION VIEW OF TEST HOLE

NOT TO SCALE

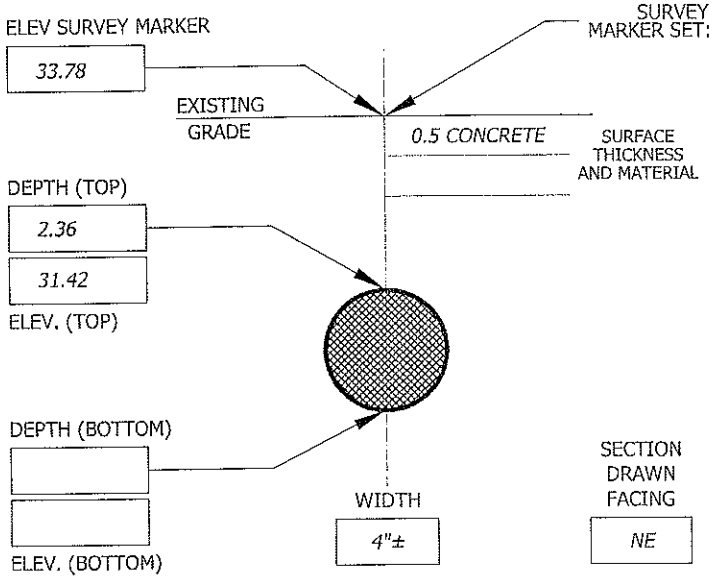

SURVEY MARKER SET: CHIS "X" ABOVE: CROWN OF UTILITY MARKING TAPE INSTALLED: YELLOW

CONTROL POINTS PROVIDED BY: WHITMAN REQUARDT AND ASSOCIATES, LLP

105	N= -2202.90	E= 4545.83	ELEV= 27.43
106	N= -1748.30	E= 4524.82	ELEV= 32.27

A/I/DATA MARKER:	NORTHING	EASTING	ELEVATION
	-993.85	4523.46	33.78

NOTES:

TEST HOLE DATA PRODUCED BY:
ACCURATE INFRASTRUCTURE DATA, INC.
1100 BATAVIA FARM ROAD, SUITE 200, BALTIMORE, MD 21237
PH: 410-686-5091 FAX: 410-686-5093
ALL MEASUREMENTS ARE SHOWN IN DECIMAL FEET EXCEPT WHERE NOTED

PLAN VIEW OF TEST HOLE

DIMENSIONS GOVERN; DO NOT SCALE

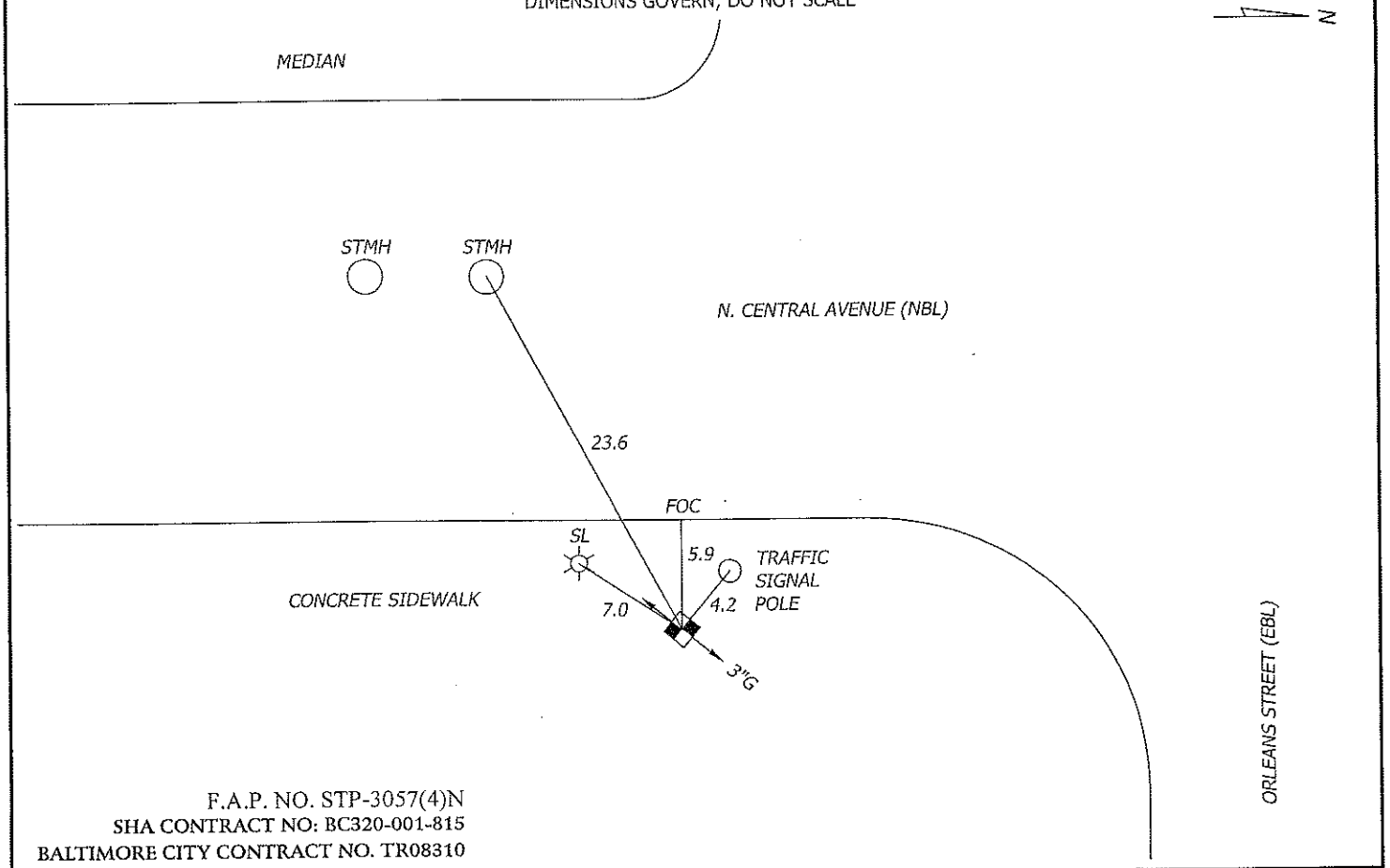

F.A.P. NO. STP-3057(4)N
SHA CONTRACT NO: BC320-001-815
BALTIMORE CITY CONTRACT NO. TR08310

A / I / DATA - TEST HOLE DATA SHEET

JOB #: 09134 TEST HOLE # : A20

PROJECT NAME:	CENTRAL AVENUE	EXCAVATION BY: A/I/DATA	DATE DUG: 12/30/09
PROJECT LOCATION:	BALTIMORE CITY, MARYLAND	FORM BY: RRB ASSISTED BY: JMK, GMC	CHECKED BY: SEW
CLIENT NAME:	WHITMAN REQUARDT AND ASSOCIATES, LLP	PAVING CONDITION:	FAIR
UTILITY REQUESTED:	STORM DRAIN	GENERAL SOIL CONDITIONS:	SOFT MOIST CLAY ROCKY
UTILITY FOUND:	PRECAST STORM DRAIN (SEE NOTE)	UTILITY CONDITION:	GOOD
		MARKER SURVEYED BY:	A/I/DATA

SECTION VIEW OF TEST HOLE
NOT TO SCALE

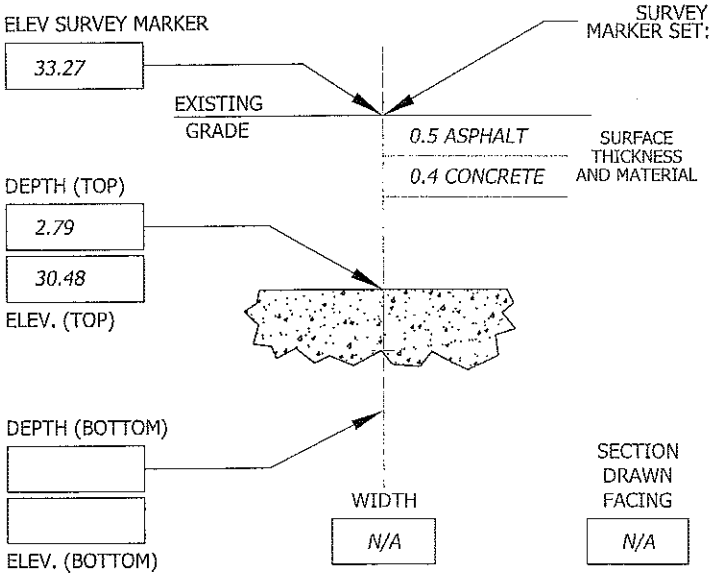

SURVEY MARKER SET: PK NAIL ABOVE: TOP OF UTILITY MARKING TAPE INSTALLED: GREEN

CONTROL POINTS PROVIDED BY: WHITMAN REQUARDT AND ASSOCIATES, LLP

105	N= -2202.90	E= 4545.83	ELEV= 27.43
106	N= -1748.30	E= 4524.82	ELEV= 32.27

A/I/DATA MARKER:	NORTHING	EASTING	ELEVATION
	-966.50	4522.86	33.27

NOTES:
TEST HOLE REVEALED TOP OF A PRECAST CONCRETE STORM DRAIN.
UNABLE TO EXPOSE EDGE.

TEST HOLE DATA PRODUCED BY:
ACCURATE INFRASTRUCTURE DATA, INC.
1100 BATAVIA FARM ROAD, SUITE 200, BALTIMORE, MD 21237
PH: 410-686-5091 FAX: 410-686-5093
ALL MEASUREMENTS ARE SHOWN IN DECIMAL FEET EXCEPT WHERE NOTED

PLAN VIEW OF TEST HOLE
DIMENSIONS GOVERN; DO NOT SCALE

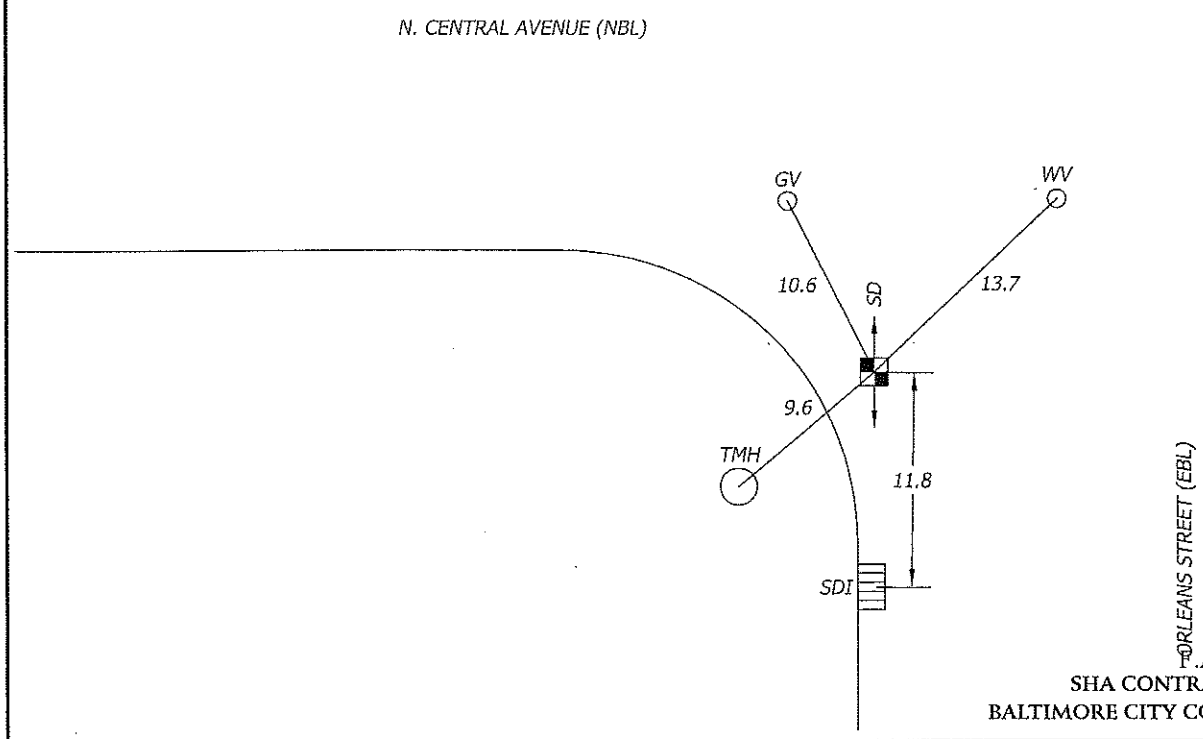

F.A.P. NO. STP-3057(4)N
SHA CONTRACT NO: BC320-001-815
BALTIMORE CITY CONTRACT NO. TR08310

A / I / DATA - TEST HOLE DATA SHEET

JOB #: 09134 TEST HOLE # : A21

PROJECT NAME:	CENTRAL AVENUE	EXCAVATION BY: A/I/DATA	DATE DUG: 12/28/09
PROJECT LOCATION:	BALTIMORE CITY, MARYLAND	FORM BY: RRB ASSISTED BY: TDM, GMC, JMK	CHECKED BY: SEW
CLIENT NAME:	WHITMAN REQUARDT AND ASSOCIATES, LLP	PAVING CONDITION:	FAIR
UTILITY REQUESTED:	TELEPHONE	GENERAL SOIL CONDITIONS:	SOFT MOIST SAND
UTILITY FOUND:	CAST IN PLACE CONCRETE ELECTRIC DUCT	UTILITY CONDITION:	GOOD
		MARKER SURVEYED BY:	A/I/DATA

SECTION VIEW OF TEST HOLE

NOT TO SCALE

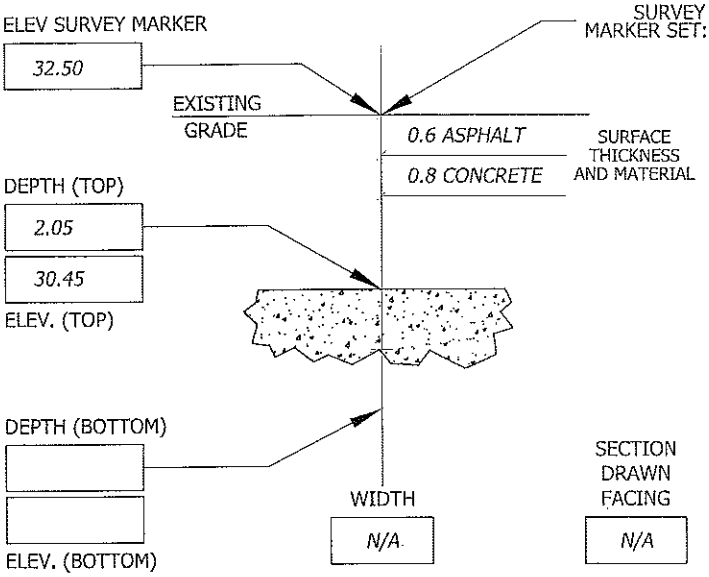

SURVEY MARKER SET: PK NAIL ABOVE: TOP OF UTILITY MARKING TAPE INSTALLED: RED

CONTROL POINTS PROVIDED BY: WHITMAN REQUARDT AND ASSOCIATES, LLP

105	N= -2202.90	E= 4545.83	ELEV= 27.43
106	N= -1748.30	E= 4524.82	ELEV= 32.27

A/I/DATA MARKER:	NORTHING	EASTING	ELEVATION
	-969.49	4441.70	32.50

NOTES:
TELEPHONE REQUESTED AT THIS LOCATION; HOWEVER, TEST HOLE REVEALED THE TOP OF AN ELECTRIC DUCT. SEE TEST HOLE DATA SHEET #43 FOR INFORMATION ON REQUESTED DUCT.

TEST HOLE DATA PRODUCED BY:
ACCURATE INFRASTRUCTURE DATA, INC.
1100 BATAVIA FARM ROAD, SUITE 200, BALTIMORE, MD 21237
PH: 410-686-5091 FAX: 410-686-5093
ALL MEASUREMENTS ARE SHOWN IN DECIMAL FEET EXCEPT WHERE NOTED

PLAN VIEW OF TEST HOLE

DIMENSIONS GOVERN; DO NOT SCALE

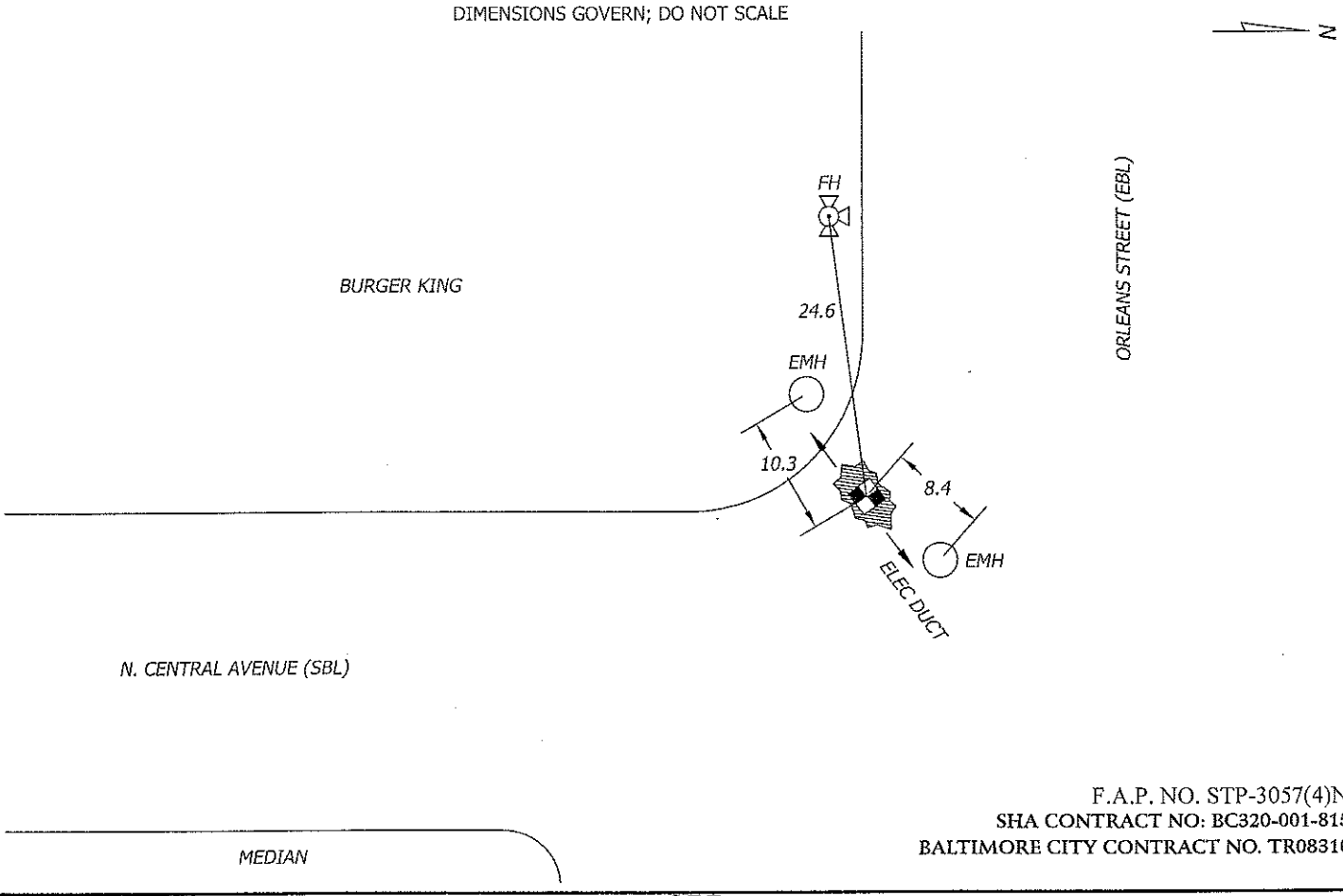

F.A.P. NO. STP-3057(4)N
SHA CONTRACT NO: BC320-001-815
BALTIMORE CITY CONTRACT NO. TR08310

A / I / DATA - TEST HOLE DATA SHEET

JOB #: 09134 TEST HOLE # : A23

PROJECT NAME:	CENTRAL AVENUE	EXCAVATION BY: A/I/DATA	DATE DUG: 12/30/09
PROJECT LOCATION:	BALTIMORE CITY, MARYLAND	FORM BY: RRB ASSISTED BY: GMC, JMK	CHECKED BY: SEW
CLIENT NAME:	WHITMAN REQUARDT AND ASSOCIATES, LLP	PAVING CONDITION:	POOR
UTILITY REQUESTED:	6" GAS	GENERAL SOIL CONDITIONS:	HARD DRY CLAY ROCKY
UTILITY FOUND:	6" GAS & 10" CAST IRON WATER	UTILITY CONDITION:	POOR
		MARKER SURVEYED BY:	A/I/DATA

SECTION VIEW OF TEST HOLE

NOT TO SCALE

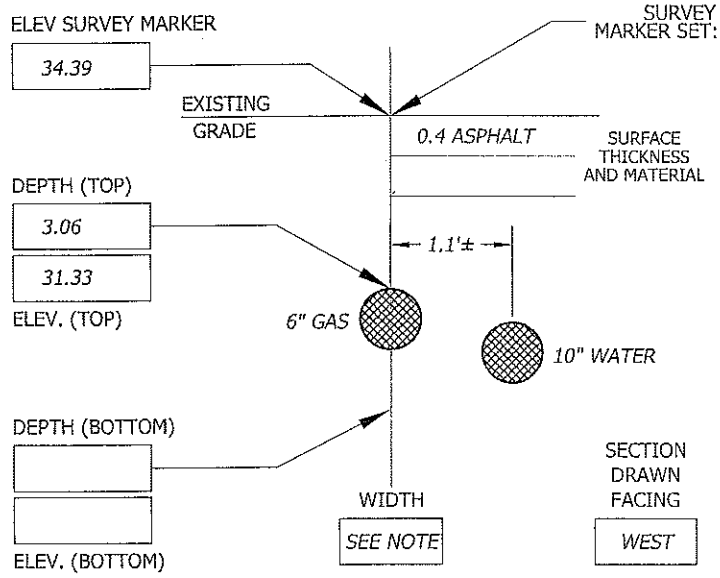

SURVEY MARKER SET: PK NAIL ABOVE: CROWN OF UTILITY MARKING TAPE INSTALLED: YELLOW

CONTROL POINTS PROVIDED BY: WHITMAN REQUARDT AND ASSOCIATES, LLP

105	N= -2202.90	E= 4545.83	ELEV= 27.43
106	N= -1748.30	E= 4524.82	ELEV= 32.27

A/I/DATA MARKER:	NORTHING	EASTING	ELEVATION
	-932.74	4560.83	34.39

NOTES:
TEST HOLE ALSO REVEALED A 10" WATER PIPE RUNNING WITH AND 1.1'± NORTH OF THE 6" GAS. COVER TO CROWN OF 10" WATER PIPE IS 4.48'. UNABLE TO OBTAIN MATERIAL ON GAS DUE TO CORROSION ON PIPE. PK NAIL SET OVER CROWN OF 6" GAS.

TEST HOLE DATA PRODUCED BY:
ACCURATE INFRASTRUCTURE DATA, INC.
1100 BATAVIA FARM ROAD, SUITE 200, BALTIMORE, MD 21237
PH: 410-686-5091 FAX: 410-686-5093
ALL MEASUREMENTS ARE SHOWN IN DECIMAL FEET EXCEPT WHERE NOTED

PLAN VIEW OF TEST HOLE

DIMENSIONS GOVERN; DO NOT SCALE

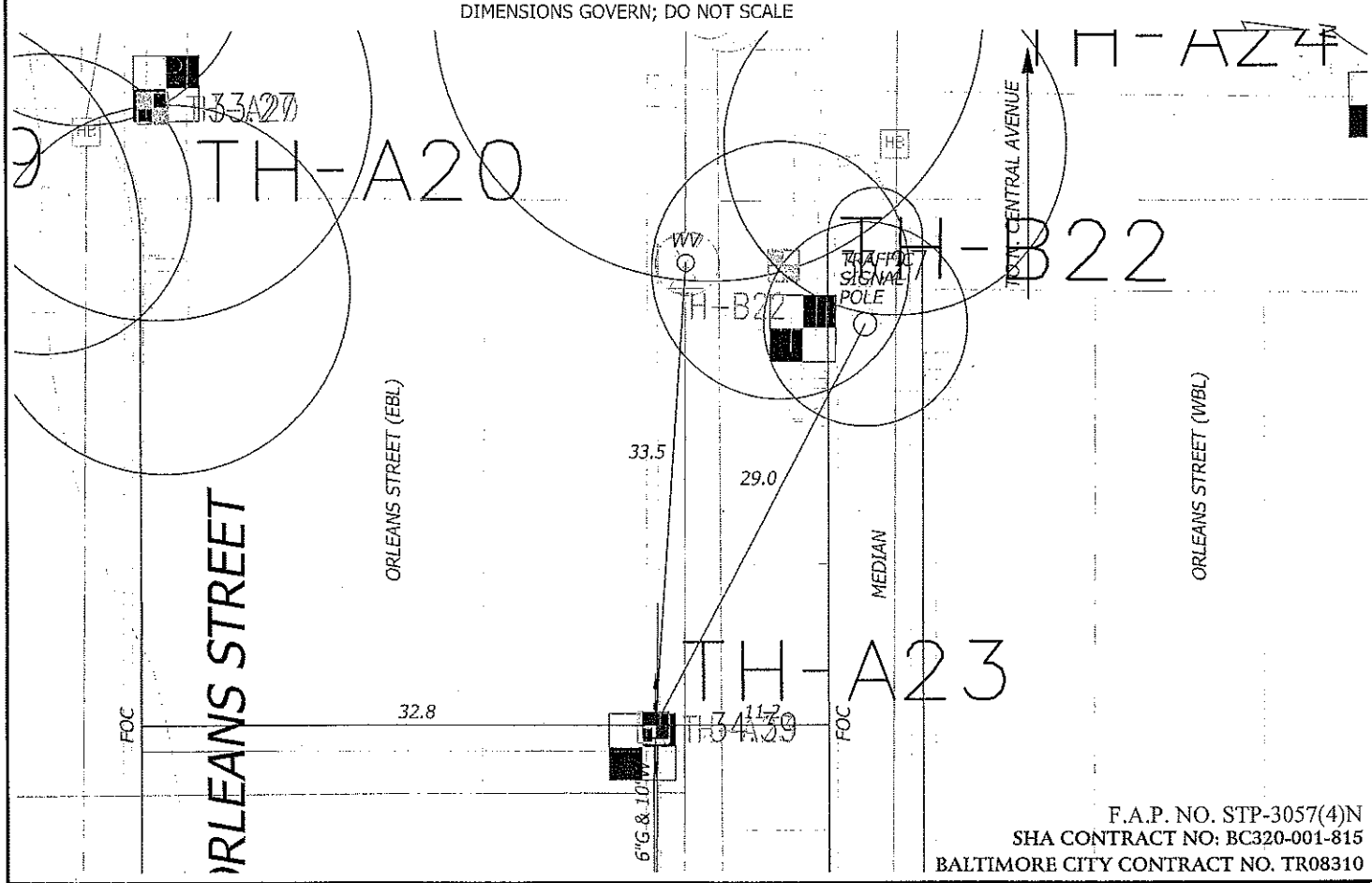

F.A.P. NO. STP-3057(4)N
SHA CONTRACT NO: BC320-001-815
BALTIMORE CITY CONTRACT NO. TR08310

A / I / DATA - TEST HOLE DATA SHEET

JOB #: 09134 TEST HOLE # : A22

PROJECT NAME:	CENTRAL AVENUE	EXCAVATION BY: A/I/DATA	DATE DUG: 12/30/09
PROJECT LOCATION:	BALTIMORE CITY, MARYLAND	FORM BY: RMS ASSISTED BY: JPW, MDI, MCG	CHECKED BY: SEW
CLIENT NAME:	WHITMAN REQUARDT AND ASSOCIATES, LLP	PAVING CONDITION:	GOOD
UTILITY REQUESTED:	20" STORM DRAIN	GENERAL SOIL CONDITIONS:	SOFT MOIST SAND ROCKY
UTILITY FOUND:	20" RCP STORM DRAIN (SEE NOTE)	UTILITY CONDITION:	GOOD
		MARKER SURVEYED BY:	A/I/DATA

SECTION VIEW OF TEST HOLE

NOT TO SCALE

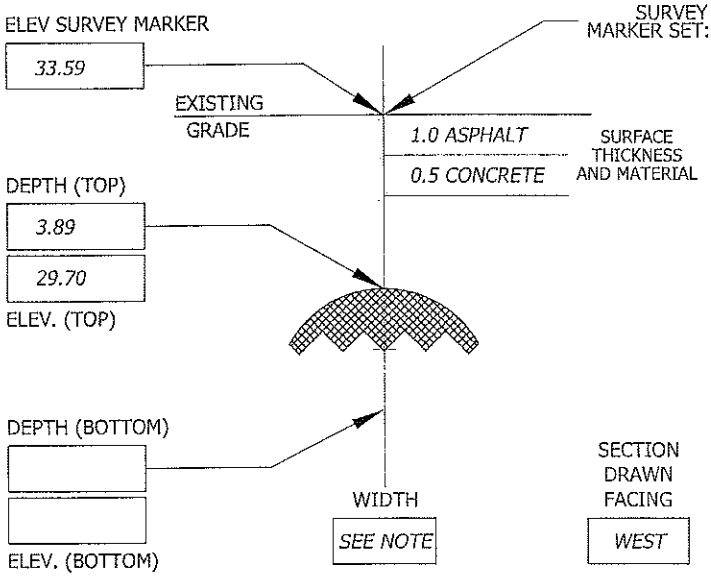

SURVEY MARKER SET: PK NAIL ABOVE: CROWN OF UTILITY MARKING TAPE INSTALLED: GREEN

CONTROL POINTS PROVIDED BY: WHITMAN REQUARDT AND ASSOCIATES, LLP

105	N= -2202.90	E= 4545.83	ELEV= 27.43
106	N= -1748.30	E= 4524.82	ELEV= 32.27

A/I/DATA MARKER:	NORTHING	EASTING	ELEVATION
	-925.14	4508.14	33.59

NOTES:
UNABLE TO OBTAIN SIZE OF EXPOSED PIPE DUE TO LARGE SIZE OF PIPE AND LIMITED SIZE OF TEST HOLE. PLANS INDICATE A 20" PIPE AT THIS LOCATION. PK NAIL SET OVER APPROXIMATE CROWN OF PIPE.

TEST HOLE DATA PRODUCED BY:
ACCURATE INFRASTRUCTURE DATA, INC.
1100 BATAVIA FARM ROAD, SUITE 200, BALTIMORE, MD 21237
PH: 410-686-5091 FAX: 410-686-5093

ALL MEASUREMENTS ARE SHOWN IN DECIMAL FEET EXCEPT WHERE NOTED

PLAN VIEW OF TEST HOLE

DIMENSIONS GOVERN; DO NOT SCALE

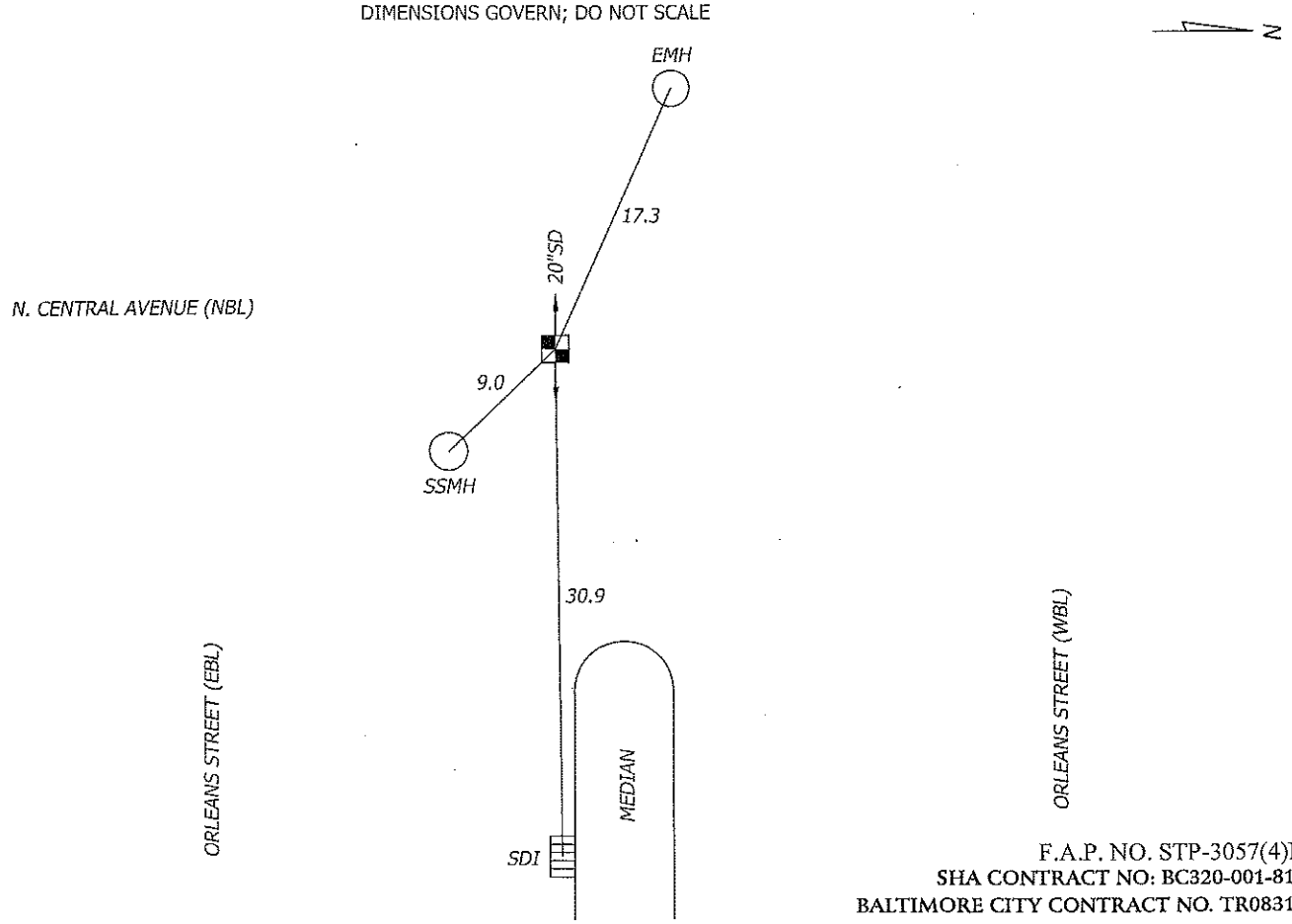

F.A.P. NO. STP-3057(4)N
SHA CONTRACT NO: BC320-001-815
BALTIMORE CITY CONTRACT NO. TR08310

A / I / DATA - TEST HOLE DATA SHEET

JOB #: 09134 TEST HOLE # : A24

PROJECT NAME:	CENTRAL AVENUE	EXCAVATION BY: A/I/DATA	DATE DUG: 12/30/09
PROJECT LOCATION:	BALTIMORE CITY, MARYLAND	FORM BY: RMS ASSISTED BY: MCG, JPW, MDI	CHECKED BY: SEW
CLIENT NAME:	WHITMAN REQUARDT AND ASSOCIATES, LLP	PAVING CONDITION:	GOOD
UTILITY REQUESTED:	3" GAS	GENERAL SOIL CONDITIONS:	SOFT MOIST CLAY ROCKY
UTILITY FOUND:	6" WRAPPED STEEL GAS	UTILITY CONDITION:	GOOD
		MARKER SURVEYED BY:	A/I/DATA

SECTION VIEW OF TEST HOLE

NOT TO SCALE

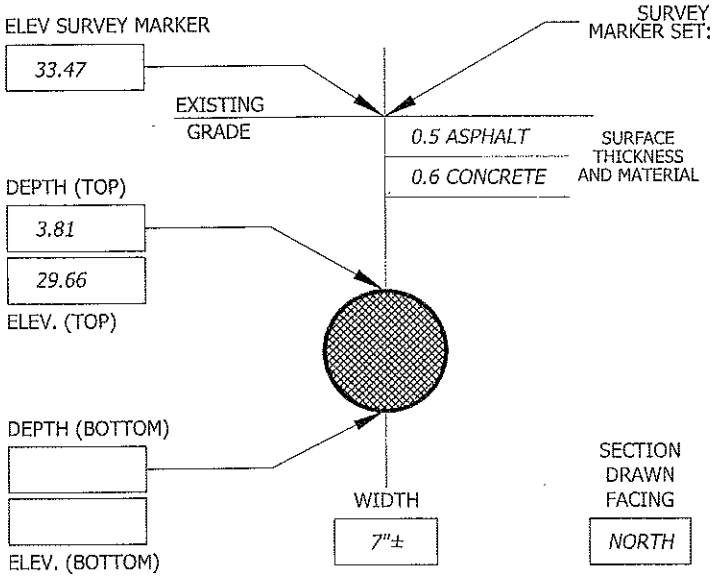

SURVEY MARKER SET: PK NAIL ABOVE: CROWN OF UTILITY MARKING TAPE INSTALLED: YELLOW

CONTROL POINTS PROVIDED BY: WHITMAN REQUARDT AND ASSOCIATES, LLP

105	N= -2202.90	E= 4545.83	ELEV= 27.43
106	N= -1748.30	E= 4524.82	ELEV= 32.27

A/I/DATA MARKER:	NORTHING	EASTING	ELEVATION
	-883.24	4517.98	33.47

NOTES:
TEST HOLE REVEALED A 6" GAS. PIPE IS YELLOW IN COLOR.

TEST HOLE DATA PRODUCED BY:
ACCURATE INFRASTRUCTURE DATA, INC.
1100 BATAVIA FARM ROAD, SUITE 200, BALTIMORE, MD 21237
PH: 410-686-5091 FAX: 410-686-5093
ALL MEASUREMENTS ARE SHOWN IN DECIMAL FEET EXCEPT WHERE NOTED

PLAN VIEW OF TEST HOLE

DIMENSIONS GOVERN; DO NOT SCALE

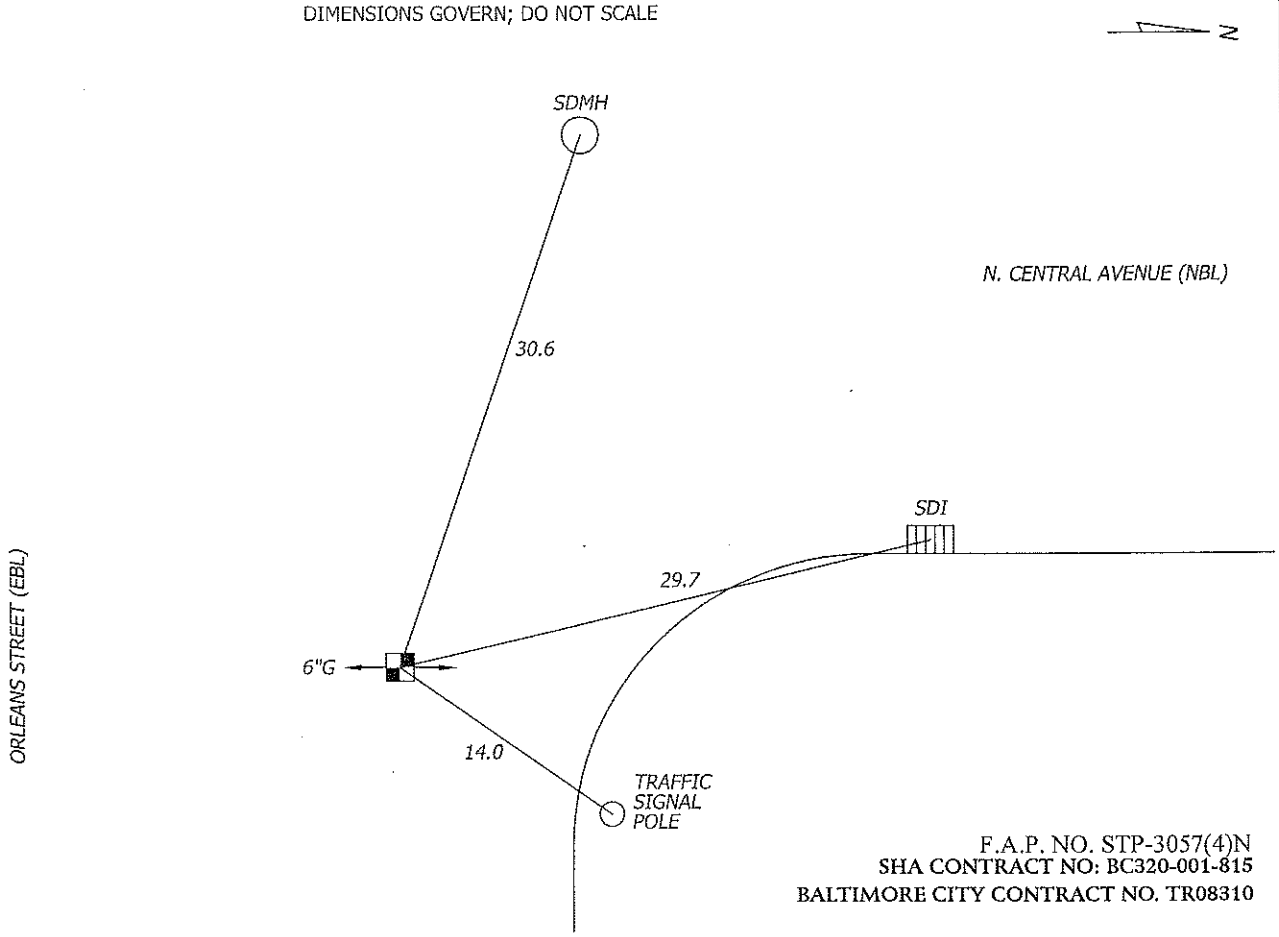

F.A.P. NO. STP-3057(4)N
SHA CONTRACT NO: BC320-001-815
BALTIMORE CITY CONTRACT NO. TR08310

A / I / DATA - TEST HOLE DATA SHEET

JOB #: 09134 TEST HOLE # : A25

PROJECT NAME:	CENTRAL AVENUE	EXCAVATION BY: A/I/DATA	DATE DUG: 12/22/09
PROJECT LOCATION:	BALTIMORE CITY, MARYLAND	FORM BY: RRB ASSISTED BY: CRB, JMK	CHECKED BY: SEW
CLIENT NAME:	WHITMAN REQUARDT AND ASSOCIATES, LLP	PAVING CONDITION:	FAIR
UTILITY REQUESTED:	TELEPHONE	GENERAL SOIL CONDITIONS:	HARD DRY SAND CLAY ROCKY
UTILITY FOUND:	CAST IN PLACE CONCRETE TELEPHONE DUCT	UTILITY CONDITION:	GOOD
		MARKER SURVEYED BY:	A/I/DATA

SECTION VIEW OF TEST HOLE

NOT TO SCALE

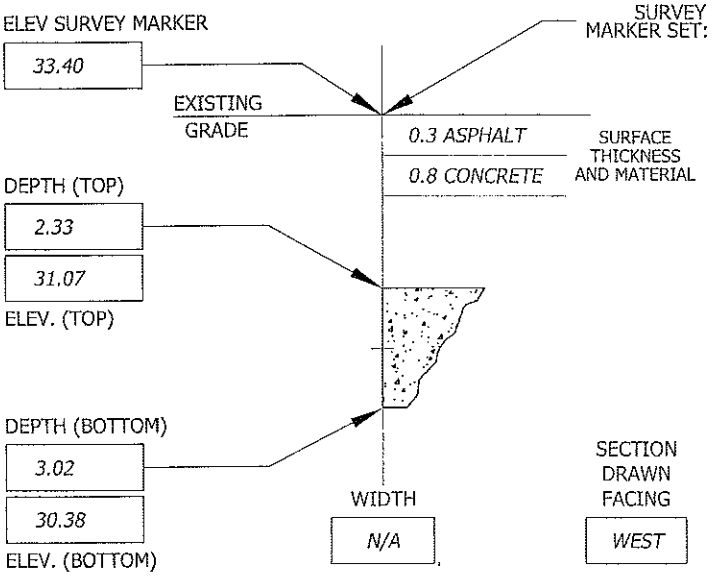

SURVEY MARKER SET: PK NAIL ABOVE: EDGE OF UTILITY MARKING TAPE INSTALLED: ORANGE

CONTROL POINTS PROVIDED BY: WHITMAN REQUARDT AND ASSOCIATES, LLP

105	N= -2202.90	E= 4545.83	ELEV= 27.43
106	N= -1748.30	E= 4524.82	ELEV= 32.27

A/I/DATA MARKER:	NORTHING	EASTING	ELEVATION
	-566.96	4493.06	33.40

NOTES:
PK NAIL SET OVER SOUTH EDGE OF DUCT.

TEST HOLE DATA PRODUCED BY:
ACCURATE INFRASTRUCTURE DATA, INC.
1100 BATAVIA FARM ROAD, SUITE 200, BALTIMORE, MD 21237
PH: 410-686-5091 FAX: 410-686-5093
ALL MEASUREMENTS ARE SHOWN IN DECIMAL FEET EXCEPT WHERE NOTED

PLAN VIEW OF TEST HOLE

DIMENSIONS GOVERN; DO NOT SCALE

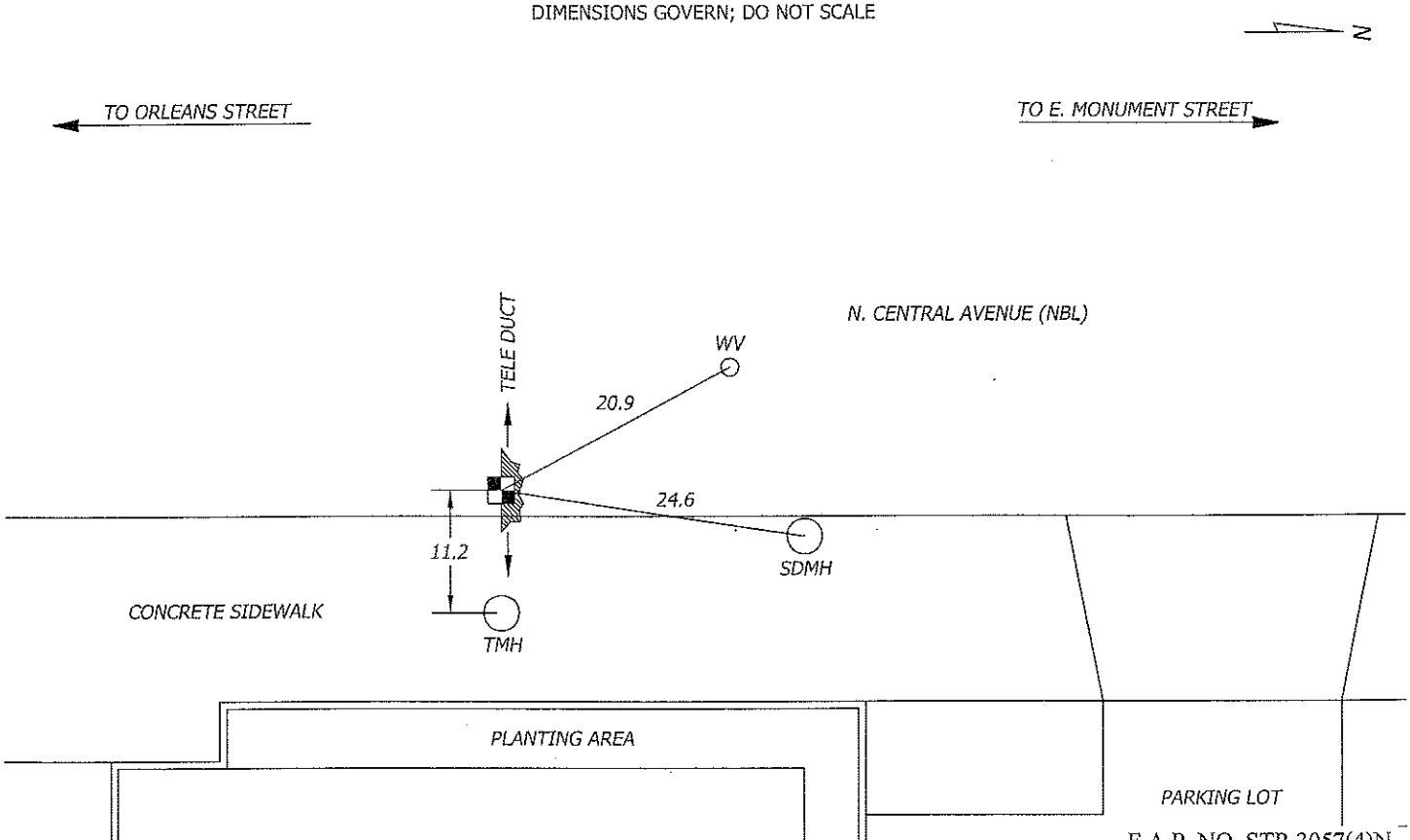

F.A.P. NO. STP-3057(4)N
SHA CONTRACT NO: BC320-001-815
BALTIMORE CITY CONTRACT NO. TR08310

A / I / DATA - TEST HOLE DATA SHEET

JOB #: 09134 TEST HOLE # : A26

PROJECT NAME:	CENTRAL AVENUE	EXCAVATION BY: A/I/DATA	DATE DUG: 12/21/09
PROJECT LOCATION:	BALTIMORE CITY, MARYLAND	FORM BY: RRB ASSISTED BY: TDL, JMK, CRB	CHECKED BY: SEW
CLIENT NAME:	WHITMAN REQUARDT AND ASSOCIATES, LLP	PAVING CONDITION:	GOOD
UTILITY REQUESTED:	6" GAS	GENERAL SOIL CONDITIONS:	SOFT MOIST SAND ROCKY
UTILITY FOUND:	6" GAS (SEE NOTE)	UTILITY CONDITION:	POOR
		MARKER SURVEYED BY:	A/I/DATA

SECTION VIEW OF TEST HOLE

NOT TO SCALE

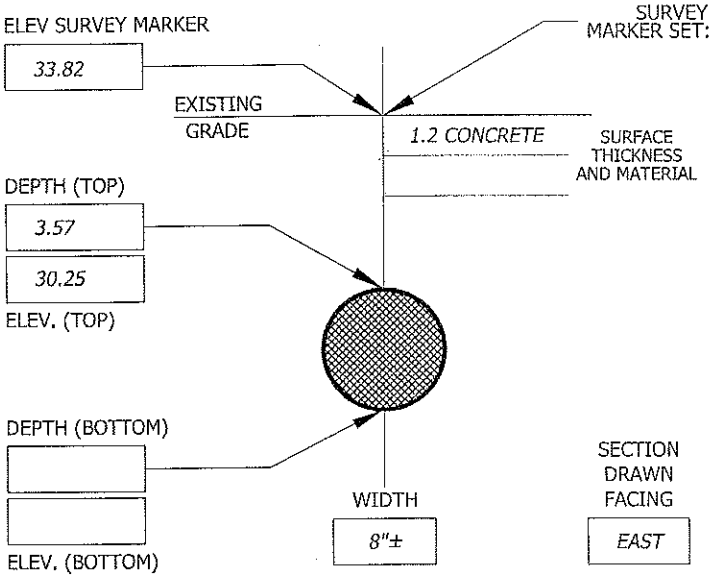

SURVEY MARKER SET: CHIS "X" ABOVE: CROWN OF UTILITY MARKING TAPE INSTALLED: YELLOW

CONTROL POINTS PROVIDED BY: WHITMAN REQUARDT AND ASSOCIATES, LLP

105	N= -2202.90	E= 4545.83	ELEV= 27.43
106	N= -1748.30	E= 4524.82	ELEV= 32.27

A/I/DATA MARKER:	NORTHING	EASTING	ELEVATION
	-551.25	4499.05	33.82

NOTES:
UNABLE TO OBTAIN MATERIAL DUE TO CORROSION ON PIPE.

TEST HOLE DATA PRODUCED BY:
ACCURATE INFRASTRUCTURE DATA, INC.
1100 BATAVIA FARM ROAD, SUITE 200, BALTIMORE, MD 21237
PH: 410-686-5091 FAX: 410-686-5093
ALL MEASUREMENTS ARE SHOWN IN DECIMAL FEET EXCEPT WHERE NOTED

PLAN VIEW OF TEST HOLE

DIMENSIONS GOVERN; DO NOT SCALE

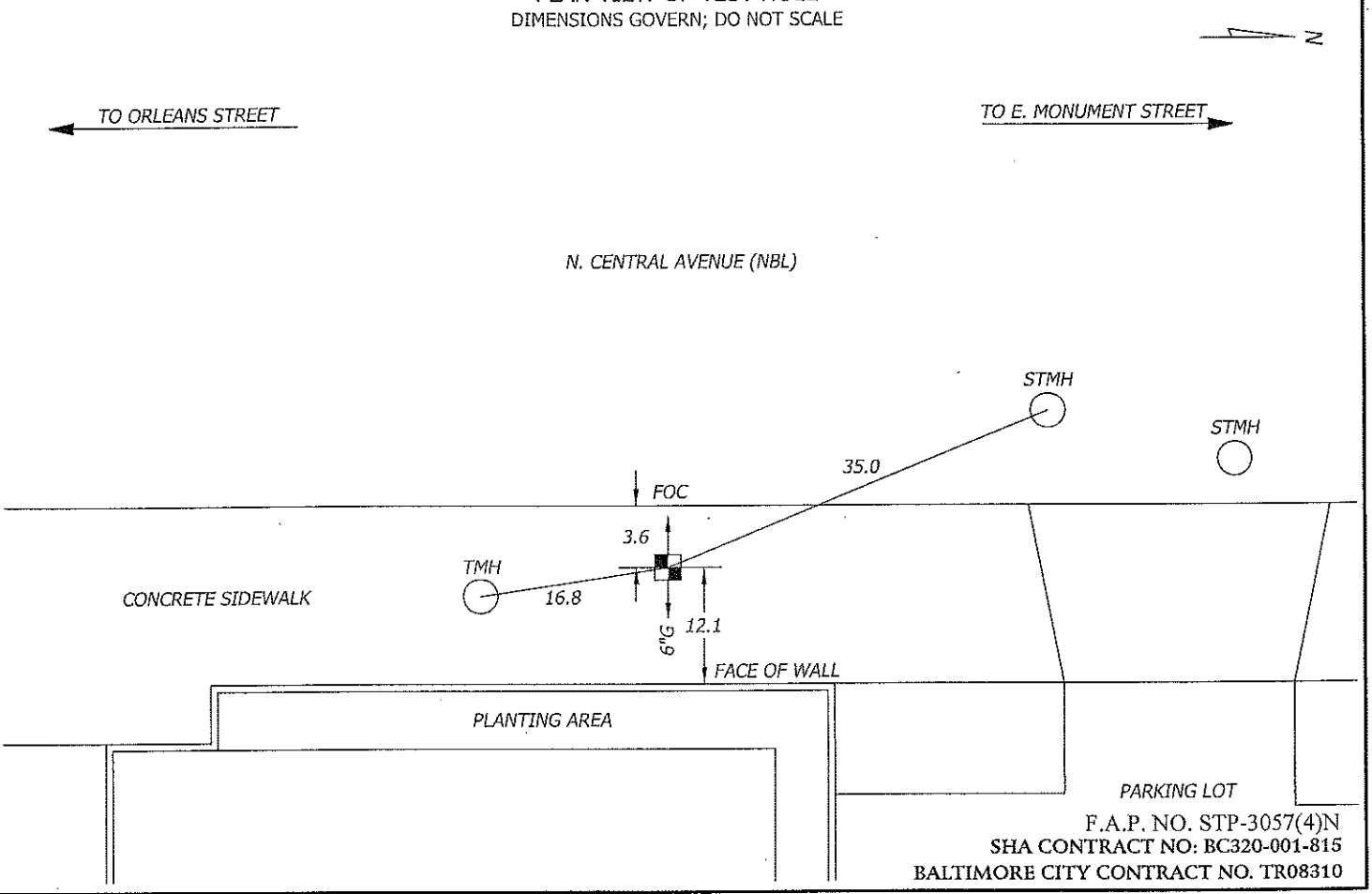

F.A.P. NO. STP-3057(4)N
SHA CONTRACT NO: BC320-001-815
BALTIMORE CITY CONTRACT NO. TR08310

A / I / DATA - TEST HOLE DATA SHEET

JOB #: 09134 TEST HOLE # : A27

PROJECT NAME:	CENTRAL AVENUE	EXCAVATION BY: A/I/DATA	DATE DUG: 12/21/09
PROJECT LOCATION:	BALTIMORE CITY, MARYLAND	FORM BY: RRB ASSISTED BY: TDL, JMK, CRB	CHECKED BY: SEW
CLIENT NAME:	WHITMAN REQUARDT AND ASSOCIATES, LLP	PAVING CONDITION:	GOOD
UTILITY REQUESTED:	TELEPHONE	GENERAL SOIL CONDITIONS:	SOFT MOIST SAND
UTILITY FOUND:	4" PLASTIC TELEPHONE CONDUIT	UTILITY CONDITION:	GOOD
		MARKER SURVEYED BY:	A/I/DATA

SECTION VIEW OF TEST HOLE

NOT TO SCALE

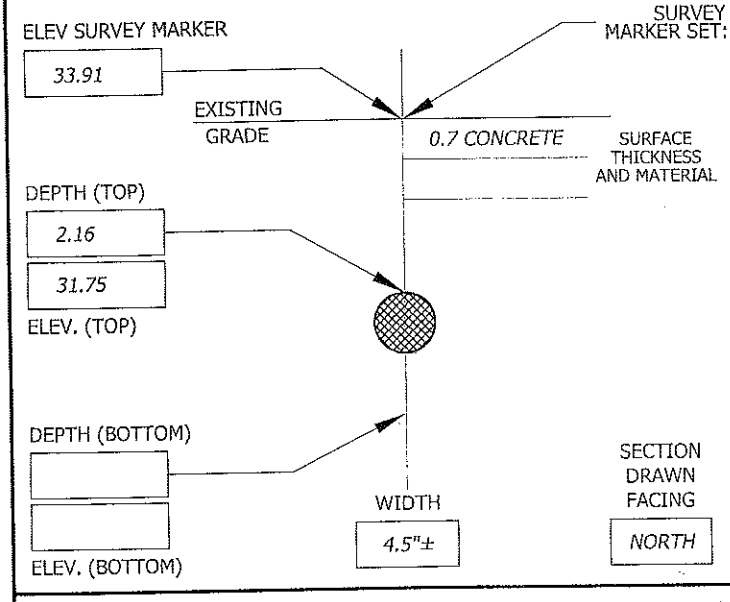

SURVEY MARKER SET: CHIS "X" ABOVE: CROWN OF UTILITY MARKING TAPE INSTALLED: ORANGE

CONTROL POINTS PROVIDED BY: WHITMAN REQUARDT AND ASSOCIATES, LLP

105	N= -2202.90	E= 4545.83	ELEV= 27.43
106	N= -1748.30	E= 4524.82	ELEV= 32.27

A/I/DATA MARKER:	NORTHING	EASTING	ELEVATION
	-543.06	4501.66	33.91

NOTES:

TEST HOLE DATA PRODUCED BY:
ACCURATE INFRASTRUCTURE DATA, INC.
1100 BATAVIA FARM ROAD, SUITE 200, BALTIMORE, MD 21237
PH: 410-686-5091 FAX: 410-686-5093
ALL MEASUREMENTS ARE SHOWN IN DECIMAL FEET EXCEPT WHERE NOTED

PLAN VIEW OF TEST HOLE

DIMENSIONS GOVERN; DO NOT SCALE

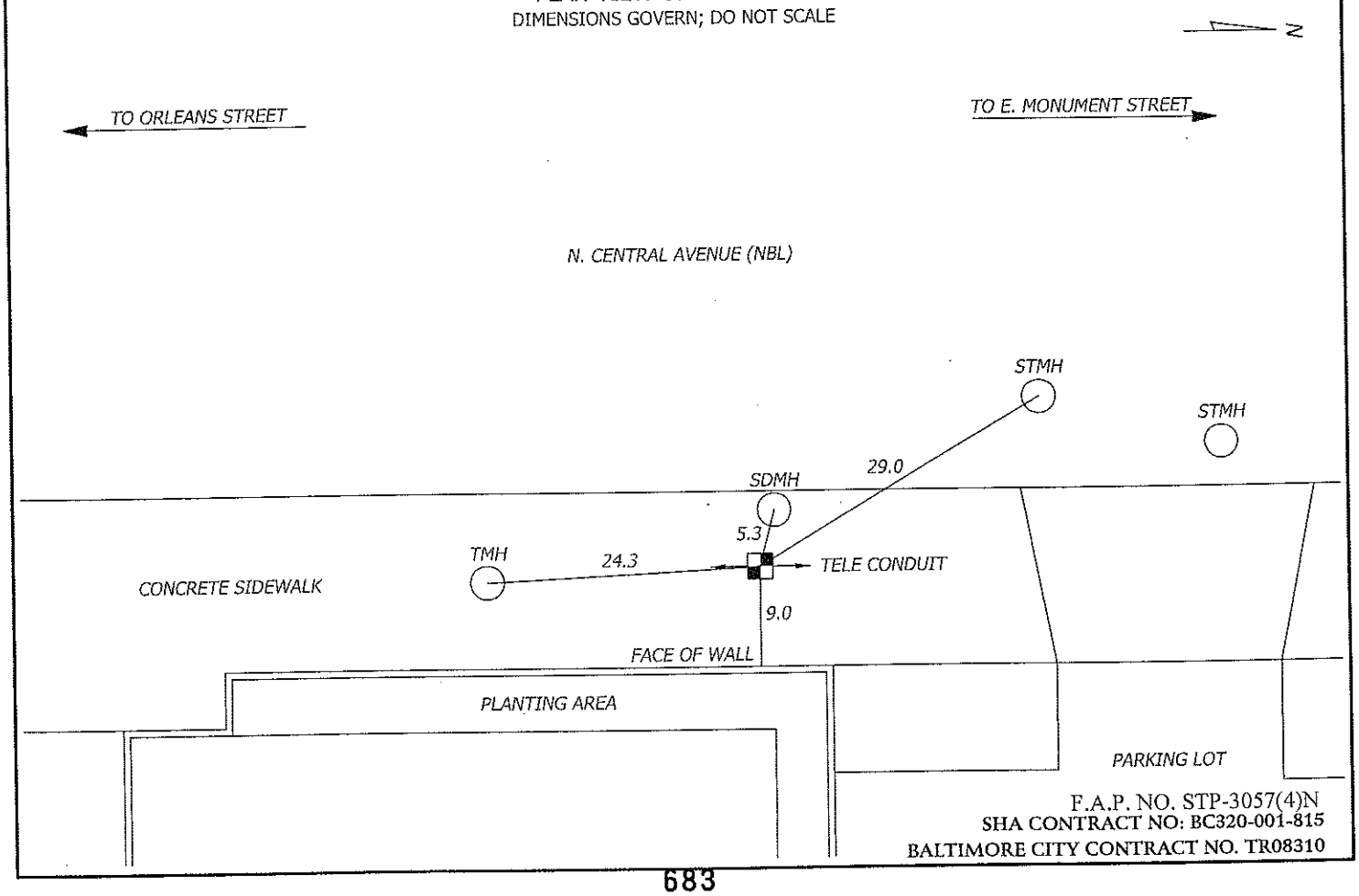

F.A.P. NO. STP-3057(4)N
SHA CONTRACT NO: BC320-001-815
BALTIMORE CITY CONTRACT NO. TR08310

A / I / DATA - TEST HOLE DATA SHEET

JOB #: 09134 TEST HOLE # : A28

PROJECT NAME:	CENTRAL AVENUE	EXCAVATION BY: A/I/DATA	DATE DUG: 12/15/09
PROJECT LOCATION:	BALTIMORE CITY, MARYLAND	FORM BY: TDM ASSISTED BY: MCG, JMK	CHECKED BY: SEW
CLIENT NAME:	WHITMAN REQUARDT AND ASSOCIATES, LLP	PAVING CONDITION:	GOOD
UTILITY REQUESTED:	6" GAS	GENERAL SOIL CONDITIONS:	FLOW ASH
UTILITY FOUND:	6" CAST IRON GAS	UTILITY CONDITION:	FAIR
		MARKER SURVEYED BY:	A/I/DATA

SECTION VIEW OF TEST HOLE

NOT TO SCALE

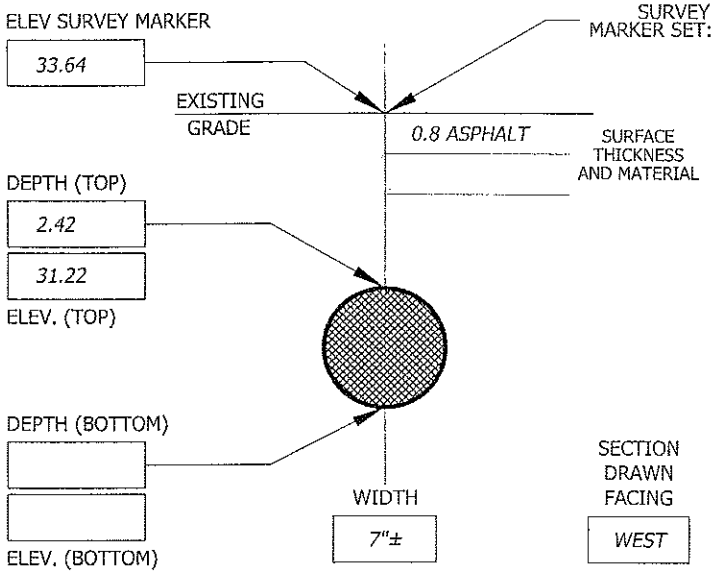

SURVEY MARKER SET: PK NAIL ABOVE: CROWN OF UTILITY MARKING TAPE INSTALLED: YELLOW

CONTROL POINTS PROVIDED BY: WHITMAN REQUARDT AND ASSOCIATES, LLP

105	N= -2202.90	E= 4545.83	ELEV= 27.43
106	N= -1748.30	E= 4524.82	ELEV= 32.27

A/I/DATA MARKER:	NORTHING	EASTING	ELEVATION
	-552.39	4431.34	33.64

NOTES:

TEST HOLE DATA PRODUCED BY:
ACCURATE INFRASTRUCTURE DATA, INC.
1100 BATAVIA FARM ROAD, SUITE 200, BALTIMORE, MD 21237
PH: 410-686-5091 FAX: 410-686-5093
ALL MEASUREMENTS ARE SHOWN IN DECIMAL FEET EXCEPT WHERE NOTED

PLAN VIEW OF TEST HOLE

DIMENSIONS GOVERN; DO NOT SCALE

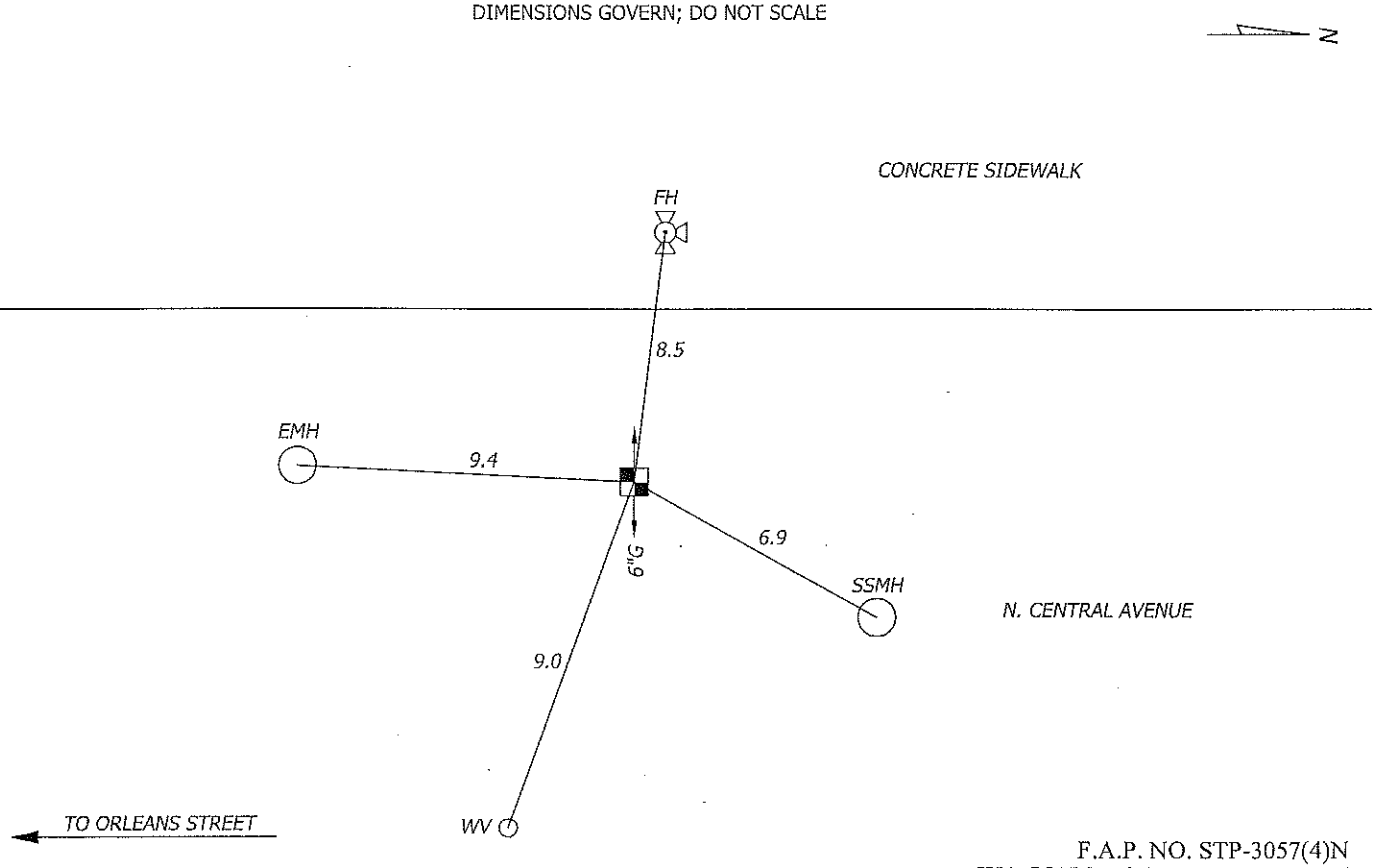

F.A.P. NO. STP-3057(4)N
SHA CONTRACT NO: BC320-001-815
BALTIMORE CITY CONTRACT NO. TR08310

A / I / DATA - TEST HOLE DATA SHEET

JOB #: 09134 TEST HOLE # : A29

PROJECT NAME:	CENTRAL AVENUE	EXCAVATION BY: A/I/DATA	DATE DUG: 12/15/09
PROJECT LOCATION:	BALTIMORE CITY, MARYLAND	FORM BY: TDM ASSISTED BY: MCG, JMK	CHECKED BY: SEW
CLIENT NAME:	WHITMAN REQUARDT AND ASSOCIATES, LLP	PAVING CONDITION:	GOOD
UTILITY REQUESTED:	10" WATER	GENERAL SOIL CONDITIONS:	FLOW ASH
UTILITY FOUND:	WATER (SEE NOTE)	UTILITY CONDITION:	SEE NOTE
		MARKER SURVEYED BY:	A/I/DATA

SECTION VIEW OF TEST HOLE

NOT TO SCALE

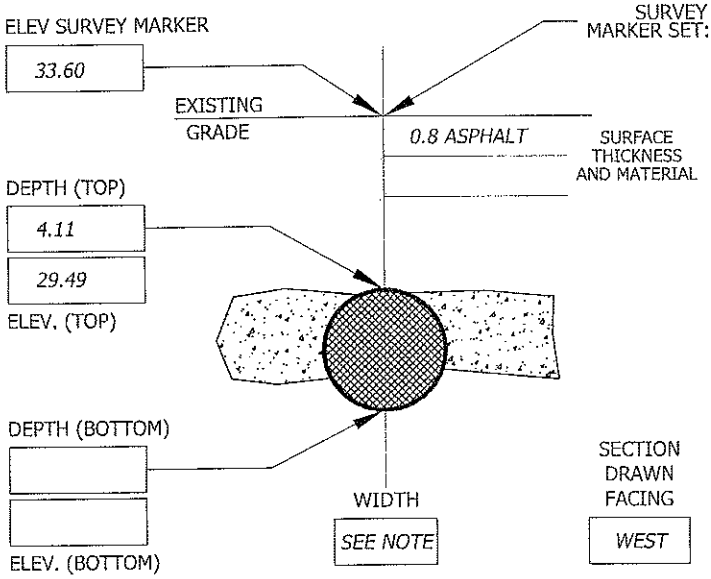

SURVEY MARKER SET: PK NAIL ABOVE: CROWN OF UTILITY MARKING TAPE INSTALLED: BLUE

CONTROL POINTS PROVIDED BY: WHITMAN REQUARDT AND ASSOCIATES, LLP

105	N= -2202.90	E= 4545.83	ELEV= 27.43
106	N= -1748.30	E= 4524.82	ELEV= 32.27

A/I/DATA MARKER:	NORTHING	EASTING	ELEVATION
	-551.31	4431.16	33.60

NOTES:
TEST HOLE REVEALED ROUGH POUR CONCRETE AROUND PIPE. POSSIBLY A THRUST BLOCK FOR REDUCER. UNABLE TO OBTAIN SIZE AND MATERIAL DUE TO CONCRETE. PK SET OVER APPROXIMATE CROWN OF PIPE.

TEST HOLE DATA PRODUCED BY:
ACCURATE INFRASTRUCTURE DATA, INC.
1100 BATAVIA FARM ROAD, SUITE 200, BALTIMORE, MD 21237
PH: 410-686-5091 FAX: 410-686-5093

ALL MEASUREMENTS ARE SHOWN IN DECIMAL FEET EXCEPT WHERE NOTED

PLAN VIEW OF TEST HOLE

DIMENSIONS GOVERN; DO NOT SCALE

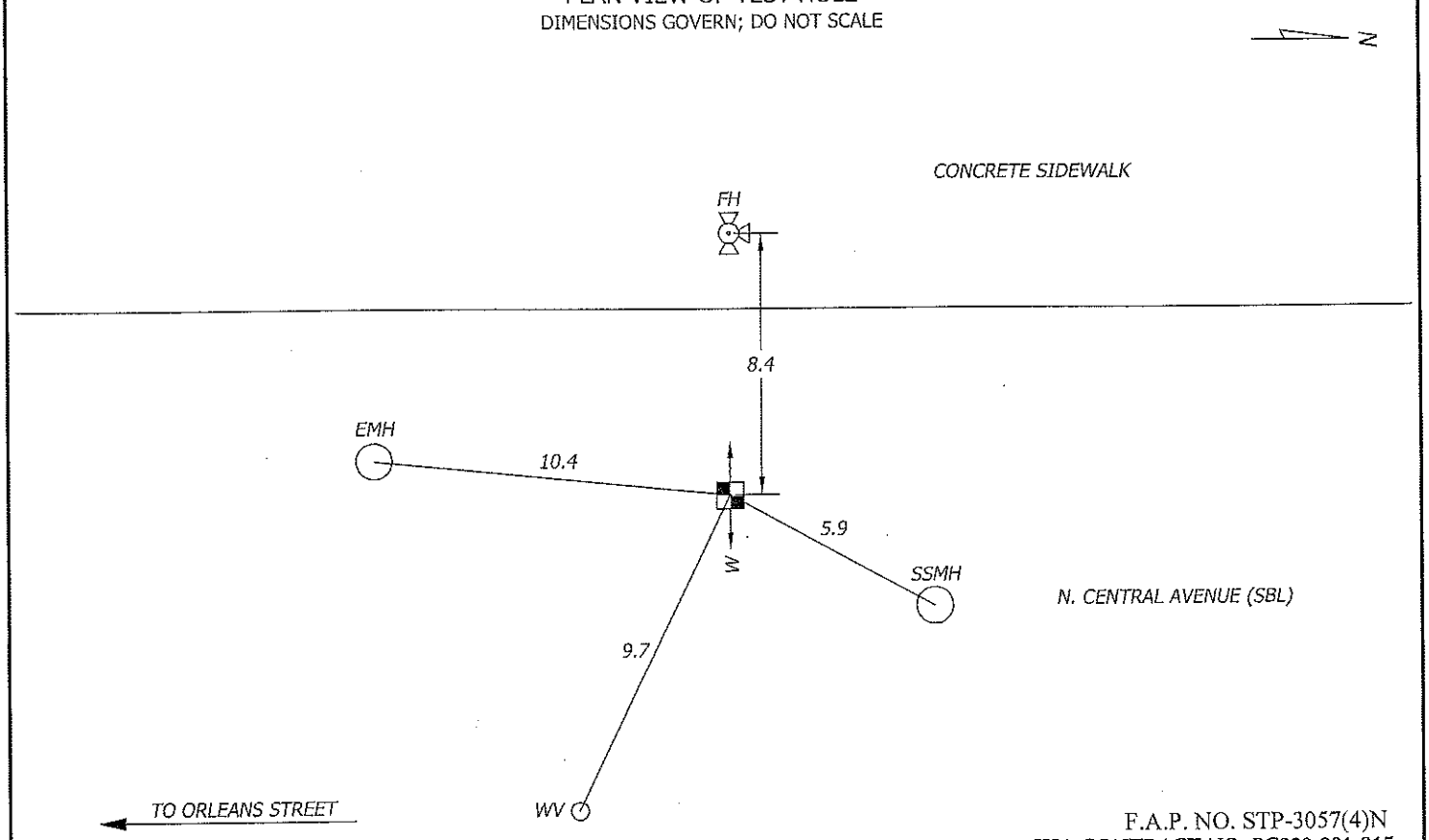

F.A.P. NO. STP-3057(4)N
SHA CONTRACT NO: BC320-001-815
BALTIMORE CITY CONTRACT NO. TR08310

A / I / DATA - TEST HOLE DATA SHEET

JOB #: 09134 TEST HOLE # : A30

PROJECT NAME:	CENTRAL AVENUE	EXCAVATION BY: A/I/DATA	DATE DUG: 12/15/09
PROJECT LOCATION:	BALTIMORE CITY, MARYLAND	FORM BY: TDM ASSISTED BY: MCG, JMK	CHECKED BY: SEW
CLIENT NAME:	WHITMAN REQUARDT AND ASSOCIATES, LLP	PAVING CONDITION:	GOOD
UTILITY REQUESTED:	24" STORM DRAIN	GENERAL SOIL CONDITIONS:	SOFT MOIST CLAY ROCKY
UTILITY FOUND:	24" RCP STORM DRAIN	UTILITY CONDITION:	GOOD
		MARKER SURVEYED BY:	A/I/DATA

SECTION VIEW OF TEST HOLE

NOT TO SCALE

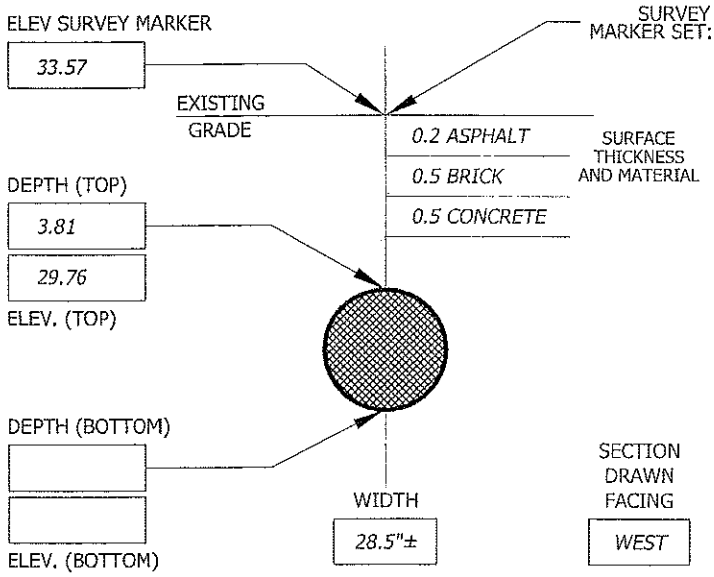

CONTROL POINTS PROVIDED BY: WHITMAN REQUARDT AND ASSOCIATES, LLP

105	N= -2202.90	E= 4545.83	ELEV= 27.43
106	N= -1748.30	E= 4524.82	ELEV= 32.27

A/I/DATA MARKER:	NORTHING	EASTING	ELEVATION
	-535.82	4426.81	33.57

NOTES:

TEST HOLE DATA PRODUCED BY:
ACCURATE INFRASTRUCTURE DATA, INC.
1100 BATAVIA FARM ROAD, SUITE 200, BALTIMORE, MD 21237
PH: 410-686-5091 FAX: 410-686-5093
ALL MEASUREMENTS ARE SHOWN IN DECIMAL FEET EXCEPT WHERE NOTED

PLAN VIEW OF TEST HOLE

DIMENSIONS GOVERN; DO NOT SCALE

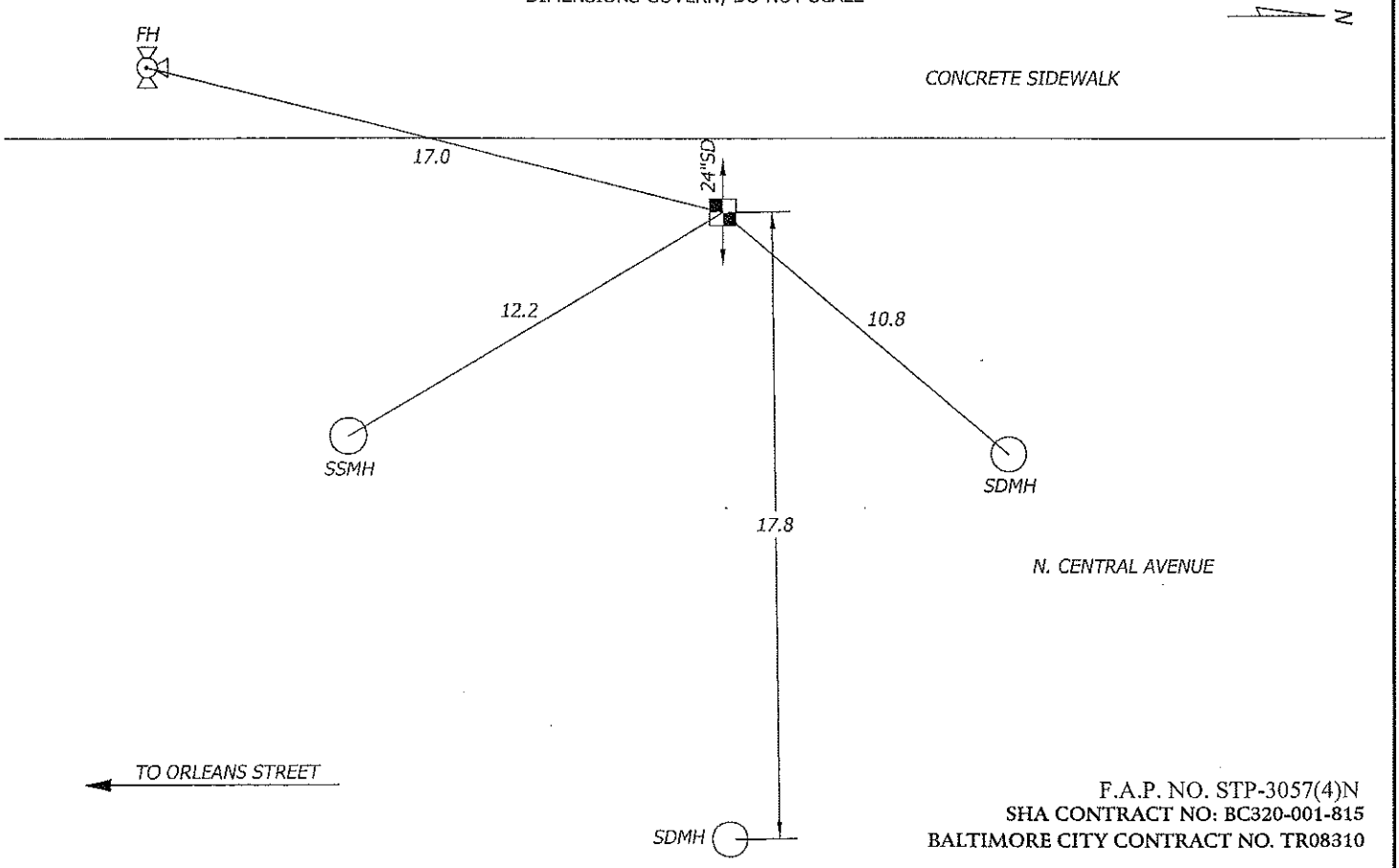

F.A.P. NO. STP-3057(4)N
SHA CONTRACT NO: BC320-001-815
BALTIMORE CITY CONTRACT NO. TR08310

A / I / DATA - TEST HOLE DATA SHEET

JOB #: 09134 TEST HOLE # : A31

PROJECT NAME:	CENTRAL AVENUE	EXCAVATION BY: A/I/DATA	DATE DUG: 12/22/09
PROJECT LOCATION:	BALTIMORE CITY, MARYLAND	FORM BY: RMS ASSISTED BY: JPW, MCG, MDI	CHECKED BY: SEW
CLIENT NAME:	WHITMAN REQUARDT AND ASSOCIATES, LLP	PAVING CONDITION:	GOOD
UTILITY REQUESTED:	16" STEAM, 24" CONDENSATE & ELECTRIC	GENERAL SOIL CONDITIONS:	SOFT MOIST SAND CLAY ROCKY
UTILITY FOUND:	NO UTILITY FOUND	UTILITY CONDITION:	N/A
		MARKER SURVEYED BY:	A/I/DATA

SECTION VIEW OF TEST HOLE

NOT TO SCALE

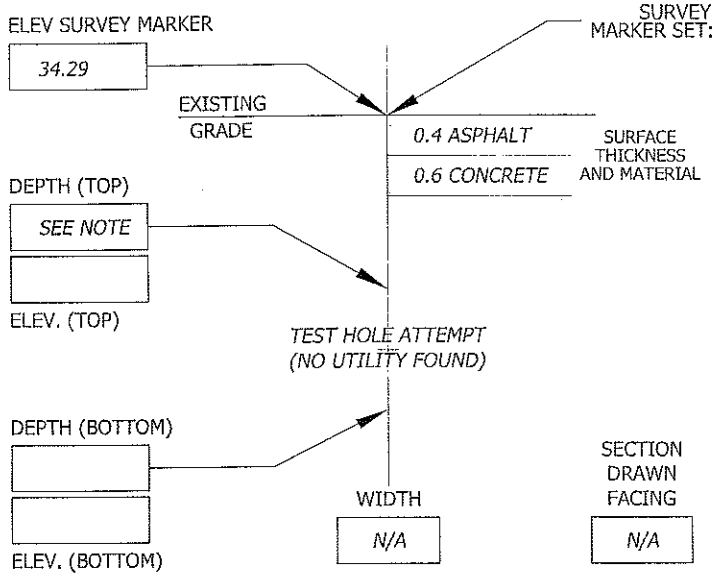

ABOVE: SEE NOTE OF UTILITY

MARKING TAPE INSTALLED: RED

CONTROL POINTS PROVIDED BY: WHITMAN REQUARDT AND ASSOCIATES, LLP

105	N= -2202.90	E= 4545.83	ELEV= 27.43
106	N= -1748.30	E= 4524.82	ELEV= 32.27

A/I/DATA MARKER:	NORTHING	EASTING	ELEVATION
	-408.44	4480.94	34.29

NOTES:
ORIGINALLY REQUESTED STEAM AND SANITARY CHANGED TO STEAM AND ELECTRIC BY CLIENT. TEST HOLE PERFORMED TO A DEPTH OF 1.74'± AND ENCOUNTERED FLOW ASH IN ALL DIRECTIONS. UNABLE TO CONTINUE EXCAVATION. PK NAIL SET OVER STRONGEST ELECTRONIC SIGNAL OF ELECTRIC LINE.

TEST HOLE DATA PRODUCED BY:
ACCURATE INFRASTRUCTURE DATA, INC.
1100 BATAVIA FARM ROAD, SUITE 200, BALTIMORE, MD 21237
PH: 410-686-5091 FAX: 410-686-5093

ALL MEASUREMENTS ARE SHOWN IN DECIMAL FEET EXCEPT WHERE NOTED

PLAN VIEW OF TEST HOLE

DIMENSIONS GOVERN; DO NOT SCALE

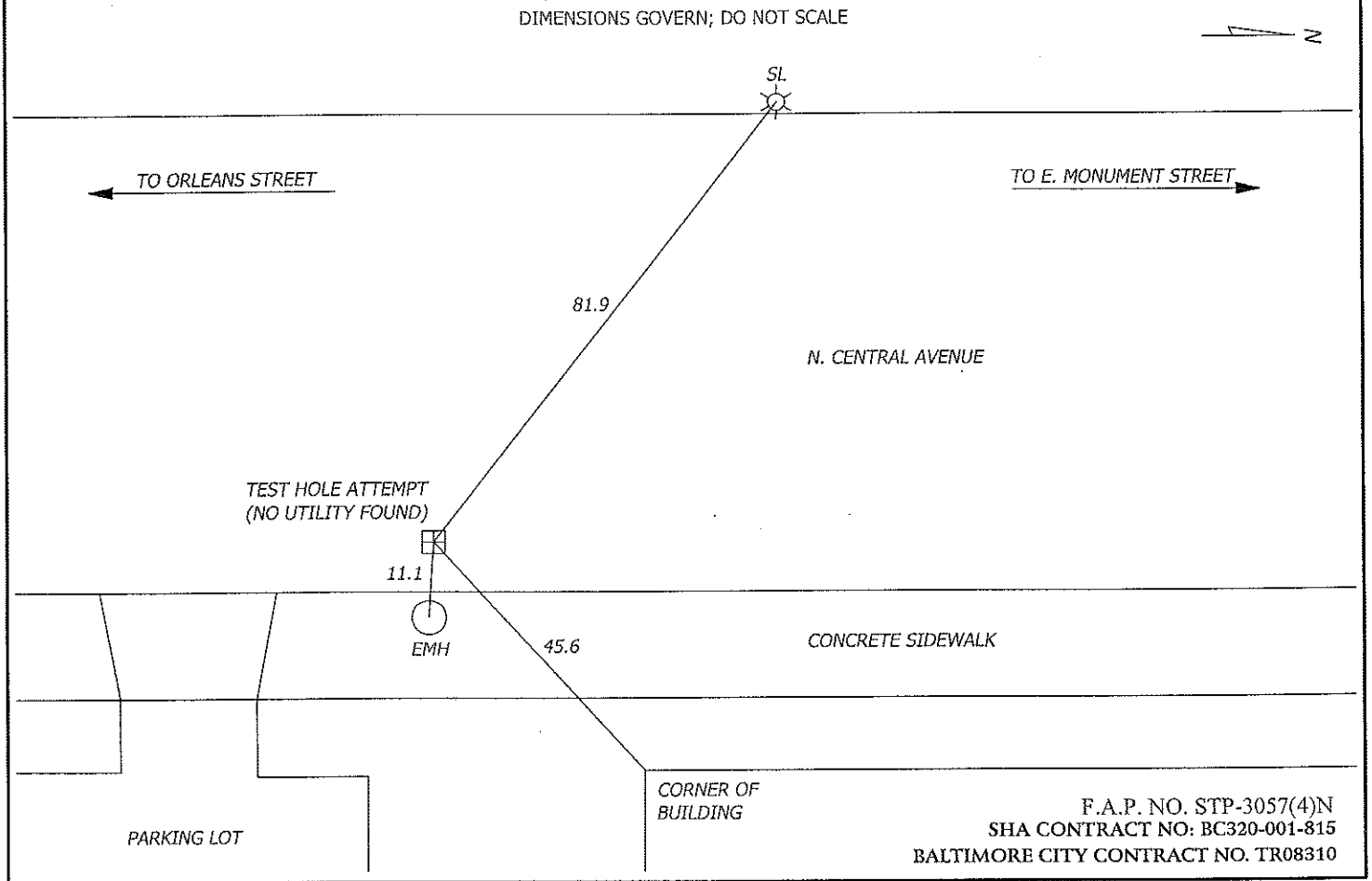

F.A.P. NO. STP-3057(4)N
SHA CONTRACT NO: BC320-001-815
BALTIMORE CITY CONTRACT NO. TR08310

A / I / DATA - TEST HOLE DATA SHEET

JOB #: 09134 TEST HOLE # : A32

PROJECT NAME:	CENTRAL AVENUE	EXCAVATION BY: A/I/DATA	DATE DUG: 12/22/09
PROJECT LOCATION:	BALTIMORE CITY, MARYLAND	FORM BY: RMS ASSISTED BY: JPW, MCG, MDI	CHECKED BY: SEW
CLIENT NAME:	WHITMAN REQUARDT AND ASSOCIATES, LLP	PAVING CONDITION:	GOOD
UTILITY REQUESTED:	16" STEAM & 24" CONDENSATE	GENERAL SOIL CONDITIONS:	SOFT MOIST CLAY ROCKY
UTILITY FOUND:	NO UTILITY FOUND	UTILITY CONDITION:	N/A
		MARKER SURVEYED BY:	A/I/DATA

SECTION VIEW OF TEST HOLE

NOT TO SCALE

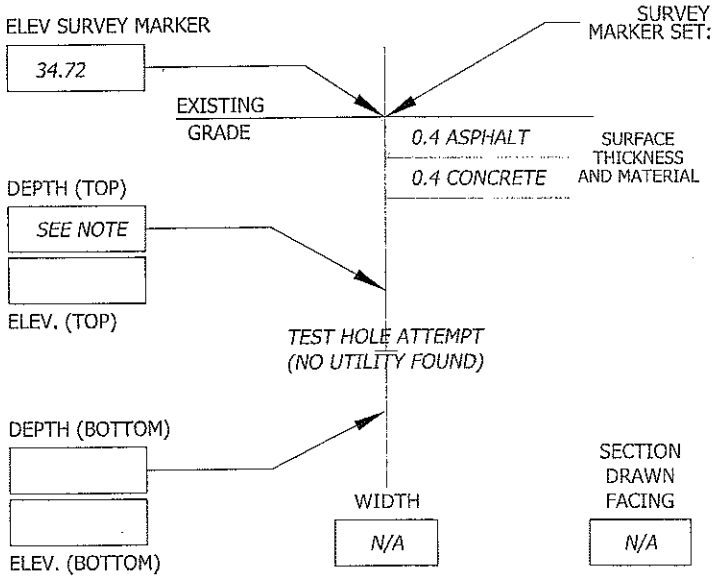

SURVEY MARKER SET: PK NAIL ABOVE: SEE NOTE OF UTILITY MARKING TAPE INSTALLED: WHITE

CONTROL POINTS PROVIDED BY: WHITMAN REQUARDT AND ASSOCIATES, LLP

105	N= -2202.90	E= 4545.83	ELEV= 27.43
106	N= -1748.30	E= 4524.82	ELEV= 32.27

A/I/DATA MARKER:	NORTHING	EASTING	ELEVATION
	-337.54	4478.47	34.72

NOTES:
TEST HOLE PERFORMED TO A DEPTH OF 1.4'± AND ENCOUNTERED FLOW ASH. UNABLE TO CONTINUE EXCAVATION. PK NAIL SET OVER STRONGEST ELECTRONIC SIGNAL.

TEST HOLE DATA PRODUCED BY:
ACCURATE INFRASTRUCTURE DATA, INC.
1100 BATAVIA FARM ROAD, SUITE 200, BALTIMORE, MD 21237
PH: 410-686-5091 FAX: 410-686-5093
ALL MEASUREMENTS ARE SHOWN IN DECIMAL FEET EXCEPT WHERE NOTED

PLAN VIEW OF TEST HOLE

DIMENSIONS GOVERN; DO NOT SCALE

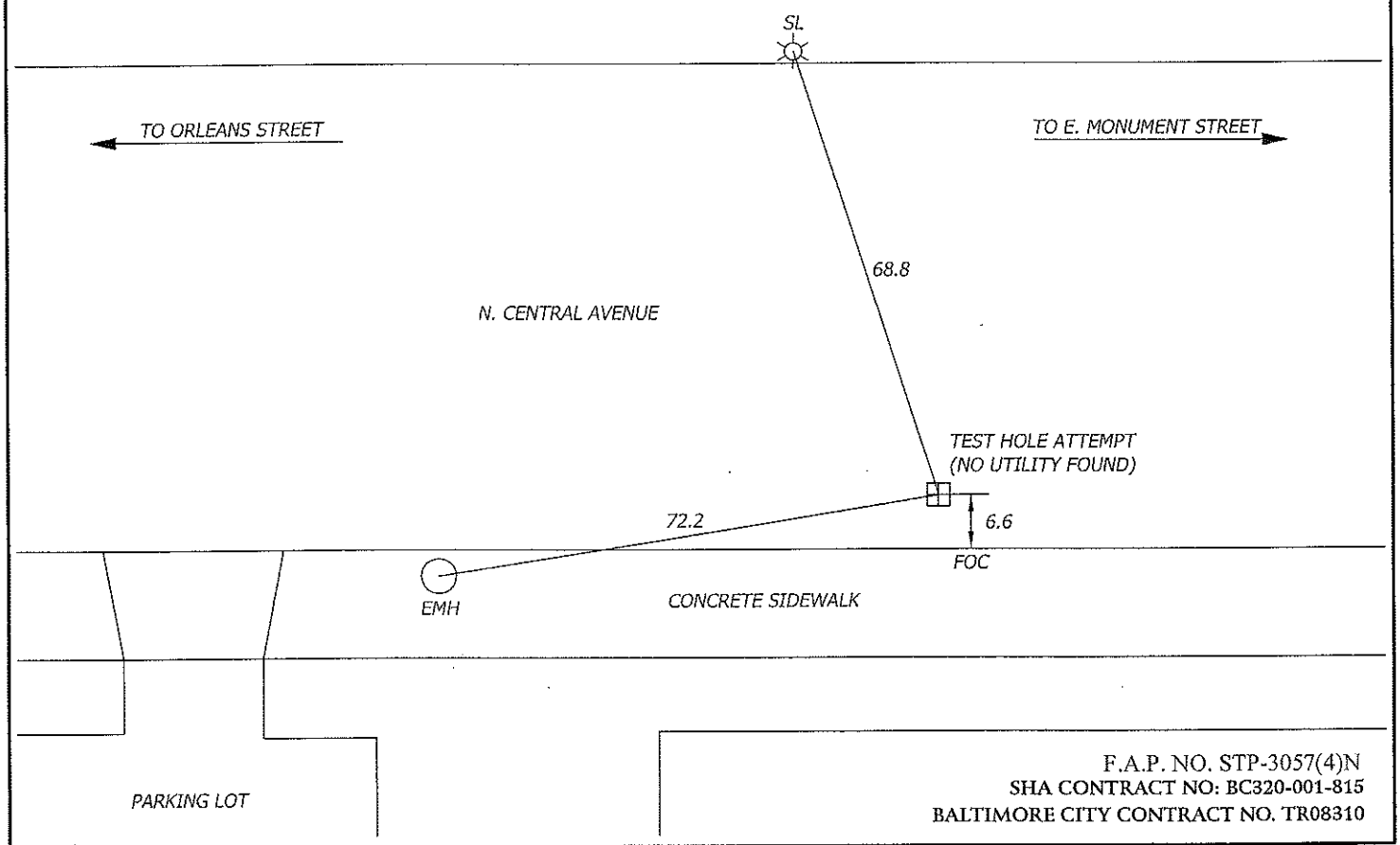

F.A.P. NO. STP-3057(4)N
SHA CONTRACT NO: BC320-001-815
BALTIMORE CITY CONTRACT NO. TR08310

A / I / DATA - TEST HOLE DATA SHEET

JOB #: 09134 TEST HOLE # : A33

PROJECT NAME:	CENTRAL AVENUE	EXCAVATION BY: A/I/DATA	DATE DUG: 12/23/09
PROJECT LOCATION:	BALTIMORE CITY, MARYLAND	FORM BY: RMS ASSISTED BY: MCG, MDI, JPW	CHECKED BY: SEW
CLIENT NAME:	WHITMAN REQUARDT AND ASSOCIATES, LLP	PAVING CONDITION:	GOOD
UTILITY REQUESTED:	GAS	GENERAL SOIL CONDITIONS:	SEE NOTE
UTILITY FOUND:	NO UTILITY FOUND	UTILITY CONDITION:	GOOD
		MARKER SURVEYED BY:	A/I/DATA

SECTION VIEW OF TEST HOLE

NOT TO SCALE

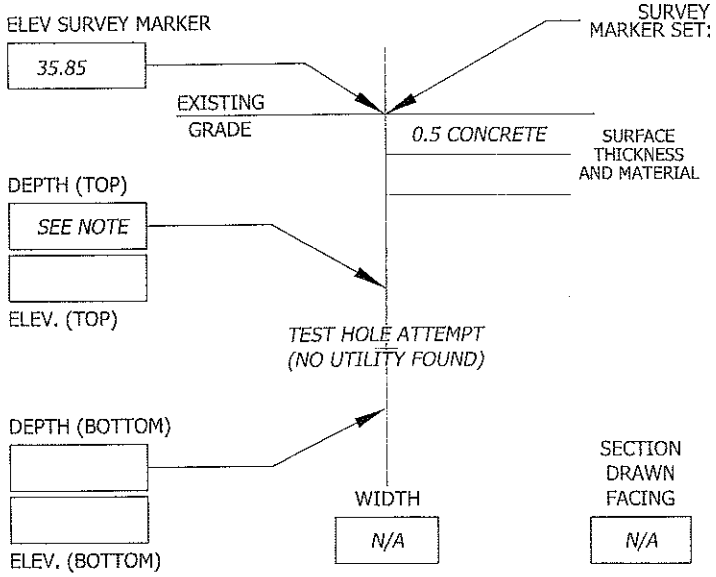

SURVEY MARKER SET: SEE NOTE ABOVE: N/A OF UTILITY MARKING TAPE INSTALLED: N/A

CONTROL POINTS PROVIDED BY: WHITMAN REQUARDT AND ASSOCIATES, LLP

105	N= -2202.90	E= 4545.83	ELEV= 27.43
106	N= -1748.30	E= 4524.82	ELEV= 32.27

A/I/DATA MARKER:	NORTHING	EASTING	ELEVATION
	-249.66	4489.61	35.85

NOTES:
TEST HOLE PERFORMED AT REQUESTED LOCATION TO A DEPTH OF 5.2'±. ENCOUNTERED MOSTLY BRICK DEBRIS IN TEST HOLE. UNABLE TO CONTINE EXCAVATION PAST 5.2'± DUE TO BRICK. UNABLE TO DETECT OR EXPOSE REQUESTED UTILITY AT THIS LOCATION. NO SURVEY MARKER SET. ALL TIES AND SURVEY TAKEN TO CENTER OF HOLE.

TEST HOLE DATA PRODUCED BY:
ACCURATE INFRASTRUCTURE DATA, INC.
1100 BATAVIA FARM ROAD, SUITE 200, BALTIMORE, MD 21237
PH: 410-686-5091 FAX: 410-686-5093

ALL MEASUREMENTS ARE SHOWN IN DECIMAL FEET EXCEPT WHERE NOTED

PLAN VIEW OF TEST HOLE

DIMENSIONS GOVERN; DO NOT SCALE

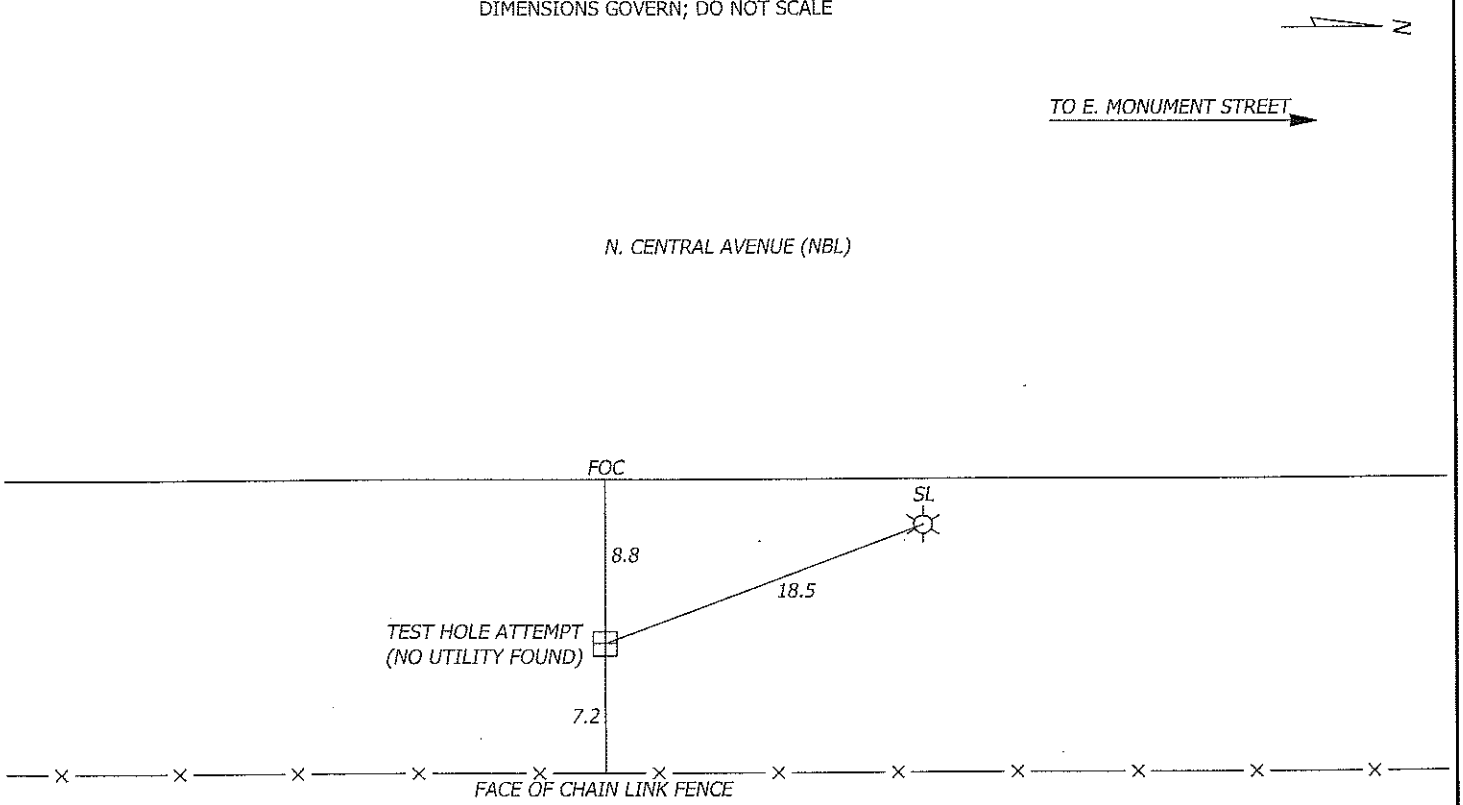

F.A.P. NO. STP-3057(4)N
SHA CONTRACT NO: BC320-001-815
BALTIMORE CITY CONTRACT NO. TR08310

A / I / DATA - TEST HOLE DATA SHEET

JOB #: 09134 TEST HOLE # : A34

PROJECT NAME:	CENTRAL AVENUE	EXCAVATION BY: A/I/DATA	DATE DUG: 12/16/09
PROJECT LOCATION:	BALTIMORE CITY, MARYLAND	FORM BY: RRB ASSISTED BY: MDI, TDL, CRB	CHECKED BY: SEW
CLIENT NAME:	WHITMAN REQUARDT AND ASSOCIATES, LLP	PAVING CONDITION:	FAIR
UTILITY REQUESTED:	ELECTRIC	GENERAL SOIL CONDITIONS:	SOFT MOIST SAND
UTILITY FOUND:	CAST IN PLACE CONCRETE ELECTRIC DUCT	UTILITY CONDITION:	GOOD
		MARKER SURVEYED BY:	A/I/DATA

SECTION VIEW OF TEST HOLE

NOT TO SCALE

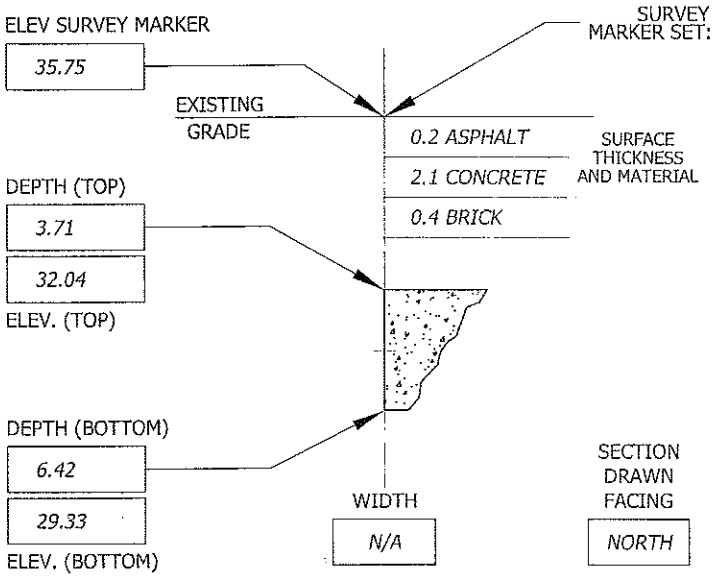

CONTROL POINTS PROVIDED BY: WHITMAN REQUARDT AND ASSOCIATES, LLP

105	N= -2202.90	E= 4545.83	ELEV= 27.43
106	N= -1748.30	E= 4524.82	ELEV= 32.27

A/I/DATA MARKER:	NORTHING	EASTING	ELEVATION
	-213.13	4412.82	35.75

NOTES:
PK NAIL SET OVER WEST EDGE OF DUCT.

TEST HOLE DATA PRODUCED BY:
ACCURATE INFRASTRUCTURE DATA, INC.
1100 BATAVIA FARM ROAD, SUITE 200, BALTIMORE, MD 21237
PH: 410-686-5091 FAX: 410-686-5093
ALL MEASUREMENTS ARE SHOWN IN DECIMAL FEET EXCEPT WHERE NOTED

PLAN VIEW OF TEST HOLE

DIMENSIONS GOVERN; DO NOT SCALE

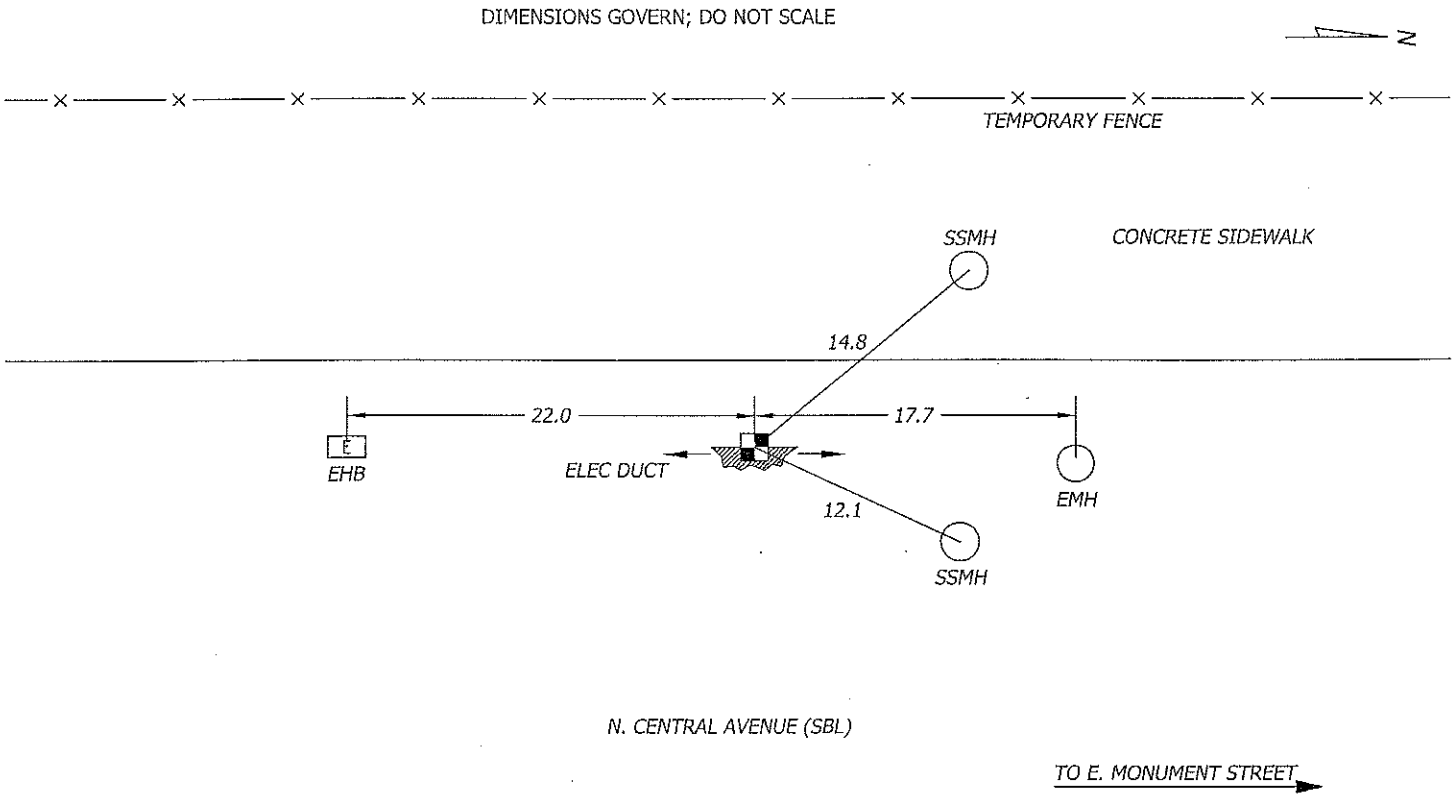

F.A.P. NO. STP-3057(4)N
SHA CONTRACT NO: BC320-001-815
BALTIMORE CITY CONTRACT NO. TR08310

A / I / DATA - TEST HOLE DATA SHEET

JOB #: 09134 TEST HOLE # : A35

PROJECT NAME:	CENTRAL AVENUE	EXCAVATION BY: A/I/DATA	DATE DUG: 12/14/09
PROJECT LOCATION:	BALTIMORE CITY, MARYLAND	FORM BY: RRB ASSISTED BY: TDL, CRB	CHECKED BY: SEW
CLIENT NAME:	WHITMAN REQUARDT AND ASSOCIATES, LLP	PAVING CONDITION:	FAIR
UTILITY REQUESTED:	26" STORM DRAIN	GENERAL SOIL CONDITIONS:	SEE NOTE
UTILITY FOUND:	26" CAST IRON STORM DRAIN	UTILITY CONDITION:	GOOD
		MARKER SURVEYED BY:	A/I/DATA

SECTION VIEW OF TEST HOLE

NOT TO SCALE

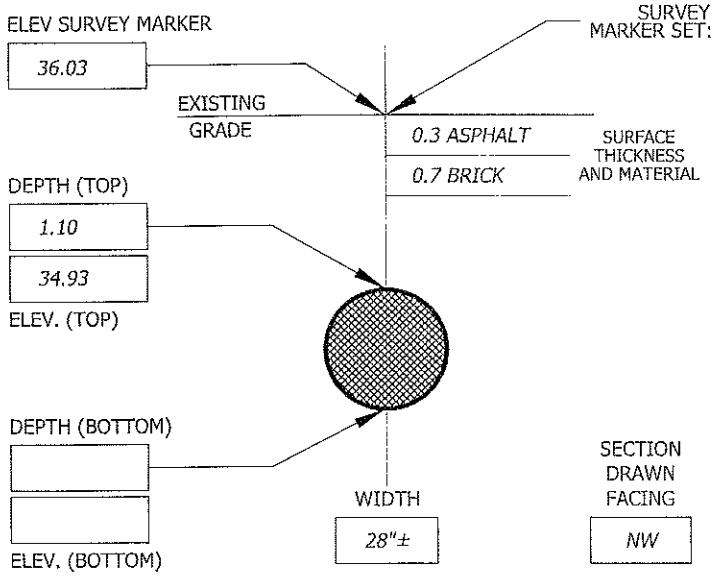

SURVEY MARKER SET: PK NAIL ABOVE: CROWN OF UTILITY MARKING TAPE INSTALLED: GREEN

CONTROL POINTS PROVIDED BY: WHITMAN REQUARDT AND ASSOCIATES, LLP

105	N= -2202.90	E= 4545.83	ELEV= 27.43
106	N= -1748.30	E= 4524.82	ELEV= 32.27

A/I/DATA MARKER:	NORTHING	EASTING	ELEVATION
	-153.93	4408.00	36.03

NOTES:
TEST HOLE REVEALED PIPE DIRECTLY UNDER BRICK.

TEST HOLE DATA PRODUCED BY:
ACCURATE INFRASTRUCTURE DATA, INC.
1100 BATAVIA FARM ROAD, SUITE 200, BALTIMORE, MD 21237
PH: 410-686-5091 FAX: 410-686-5093
ALL MEASUREMENTS ARE SHOWN IN DECIMAL FEET EXCEPT WHERE NOTED

PLAN VIEW OF TEST HOLE

DIMENSIONS GOVERN; DO NOT SCALE

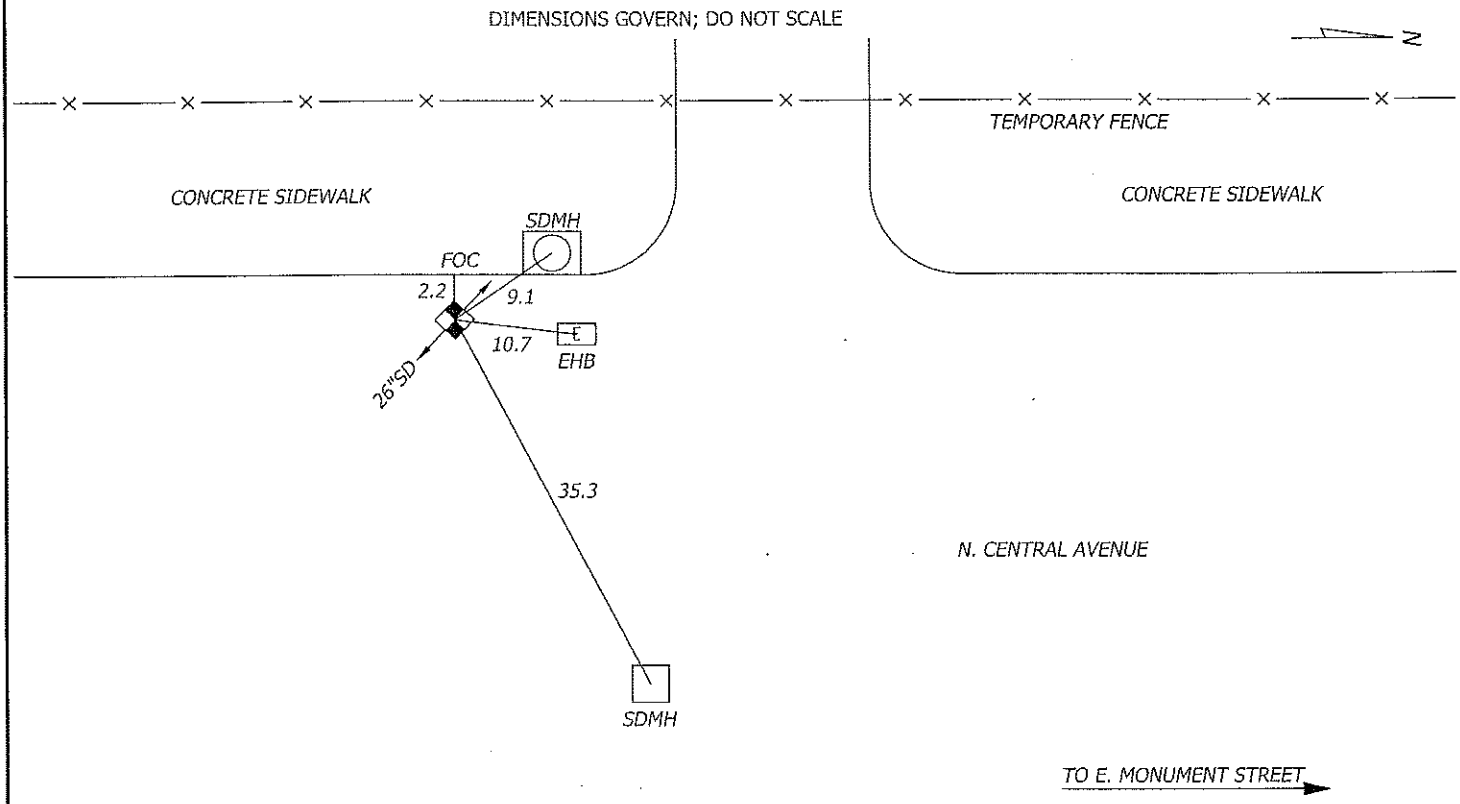

F.A.P. NO. STP-3057(4)N
SHA CONTRACT NO: BC320-001-815
BALTIMORE CITY CONTRACT NO. TR08310

A / I / DATA - TEST HOLE DATA SHEET

JOB #: 09134 TEST HOLE # : A36

PROJECT NAME:	CENTRAL AVENUE	EXCAVATION BY: A/I/DATA	DATE DUG: 12/14/09
PROJECT LOCATION:	BALTIMORE CITY, MARYLAND	FORM BY: RRB ASSISTED BY: TDL, CRB	CHECKED BY: SEW
CLIENT NAME:	WHITMAN REQUARDT AND ASSOCIATES, LLP	PAVING CONDITION:	FAIR
UTILITY REQUESTED:	STORM DRAIN	GENERAL SOIL CONDITIONS:	SOFT MOIST SAND
UTILITY FOUND:	CONCRETE (SEE NOTE)	UTILITY CONDITION:	SEE NOTE
		MARKER SURVEYED BY:	A/I/DATA

SECTION VIEW OF TEST HOLE

NOT TO SCALE

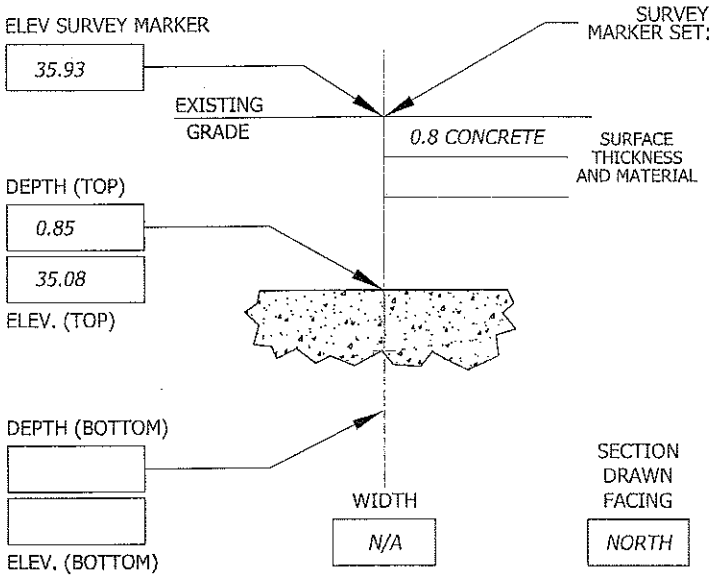

SURVEY MARKER SET: CHIS "X" ABOVE: SEE NOTE OF UTILITY MARKING TAPE INSTALLED: GREEN

CONTROL POINTS PROVIDED BY: WHITMAN REQUARDT AND ASSOCIATES, LLP

105	N= -2202.90	E= 4545.83	ELEV= 27.43
106	N= -1748.30	E= 4524.82	ELEV= 32.27

A/I/DATA MARKER:	NORTHING	EASTING	ELEVATION
	-127.86	4403.16	35.93

NOTES:
TEST HOLE REVEALED CONCRETE IN ALL DIRECTIONS. UNABLE TO EXPOSE REQUESTED STORM PIPE AT THIS LOCATION. INSPECTION OF NEAREST STORM INLET REVEALED A 12" CLAY PIPE HEADING IN THE DIRECTION OF THE TEST HOLE LOCATION. ABLE TO HEAR ACTIVITY FROM TEST HOLE LOCATION IN THE 12" CLAY PIPE AT THE INLET. CHIS "X" SET

TEST HOLE DATA PRODUCED BY:
ACCURATE INFRASTRUCTURE DATA, INC.
1100 BATAVIA FARM ROAD, SUITE 200, BALTIMORE, MD 21237
PH: 410-686-5091 FAX: 410-686-5093
ALL MEASUREMENTS ARE SHOWN IN DECIMAL FEET EXCEPT WHERE NOTED

PLAN VIEW OF TEST HOLE

DIMENSIONS GOVERN; DO NOT SCALE

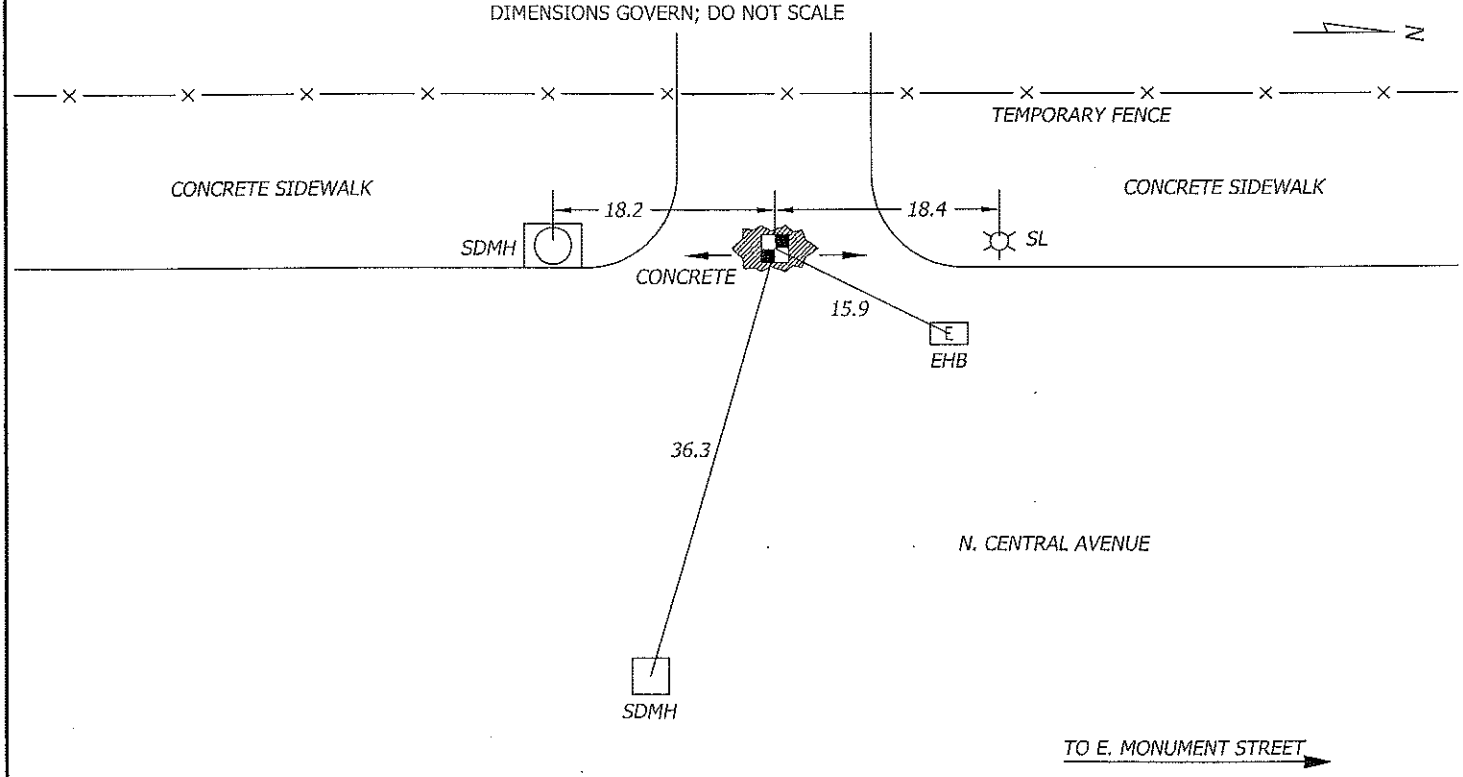

F.A.P. NO. STP-3057(4)N
SHA CONTRACT NO: BC320-001-815
BALTIMORE CITY CONTRACT NO. TR08310

A / I / DATA - TEST HOLE DATA SHEET

JOB #: 09134 TEST HOLE # : A37

PROJECT NAME:	CENTRAL AVENUE	EXCAVATION BY: A/I/DATA	DATE DUG: 12/29/09
PROJECT LOCATION:	BALTIMORE CITY, MARYLAND	FORM BY: RRB ASSISTED BY: GMC, JMK	CHECKED BY: SEW
CLIENT NAME:	WHITMAN REQUARDT AND ASSOCIATES, LLP	PAVING CONDITION:	FAIR
UTILITY REQUESTED:	24" GAS	GENERAL SOIL CONDITIONS:	SOFT MOIST CLAY
UTILITY FOUND:	24" CAST IRON GAS	UTILITY CONDITION:	GOOD
		MARKER SURVEYED BY:	A/I/DATA

SECTION VIEW OF TEST HOLE

NOT TO SCALE

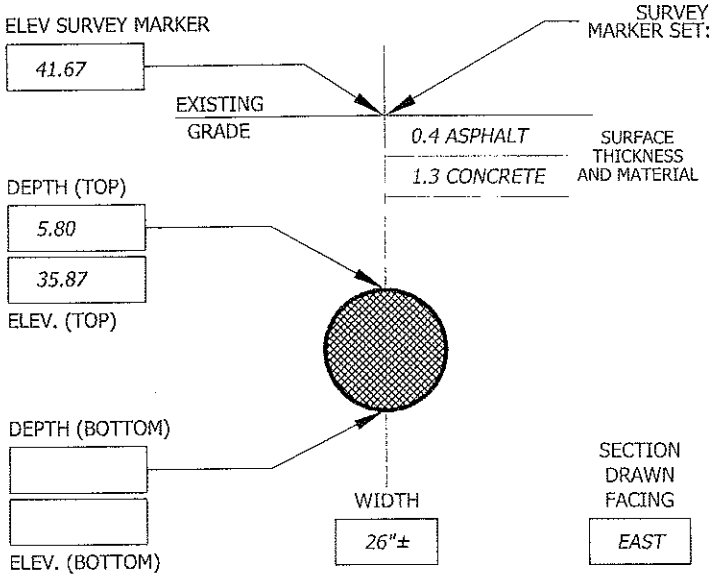

SURVEY MARKER SET: PK NAIL ABOVE: CROWN OF UTILITY MARKING TAPE INSTALLED: YELLOW

CONTROL POINTS PROVIDED BY: WHITMAN REQUARDT AND ASSOCIATES, LLP

105	N= -2202.90	E= 4545.83	ELEV= 27.43
106	N= -1748.30	E= 4524.82	ELEV= 32.27

A/I/DATA MARKER:	NORTHING	EASTING	ELEVATION
	210.13	4374.56	41.67

NOTES:

TEST HOLE DATA PRODUCED BY:
ACCURATE INFRASTRUCTURE DATA, INC.
1100 BATAVIA FARM ROAD, SUITE 200, BALTIMORE, MD 21237
PH: 410-686-5091 FAX: 410-686-5093
ALL MEASUREMENTS ARE SHOWN IN DECIMAL FEET EXCEPT WHERE NOTED

PLAN VIEW OF TEST HOLE

DIMENSIONS GOVERN; DO NOT SCALE

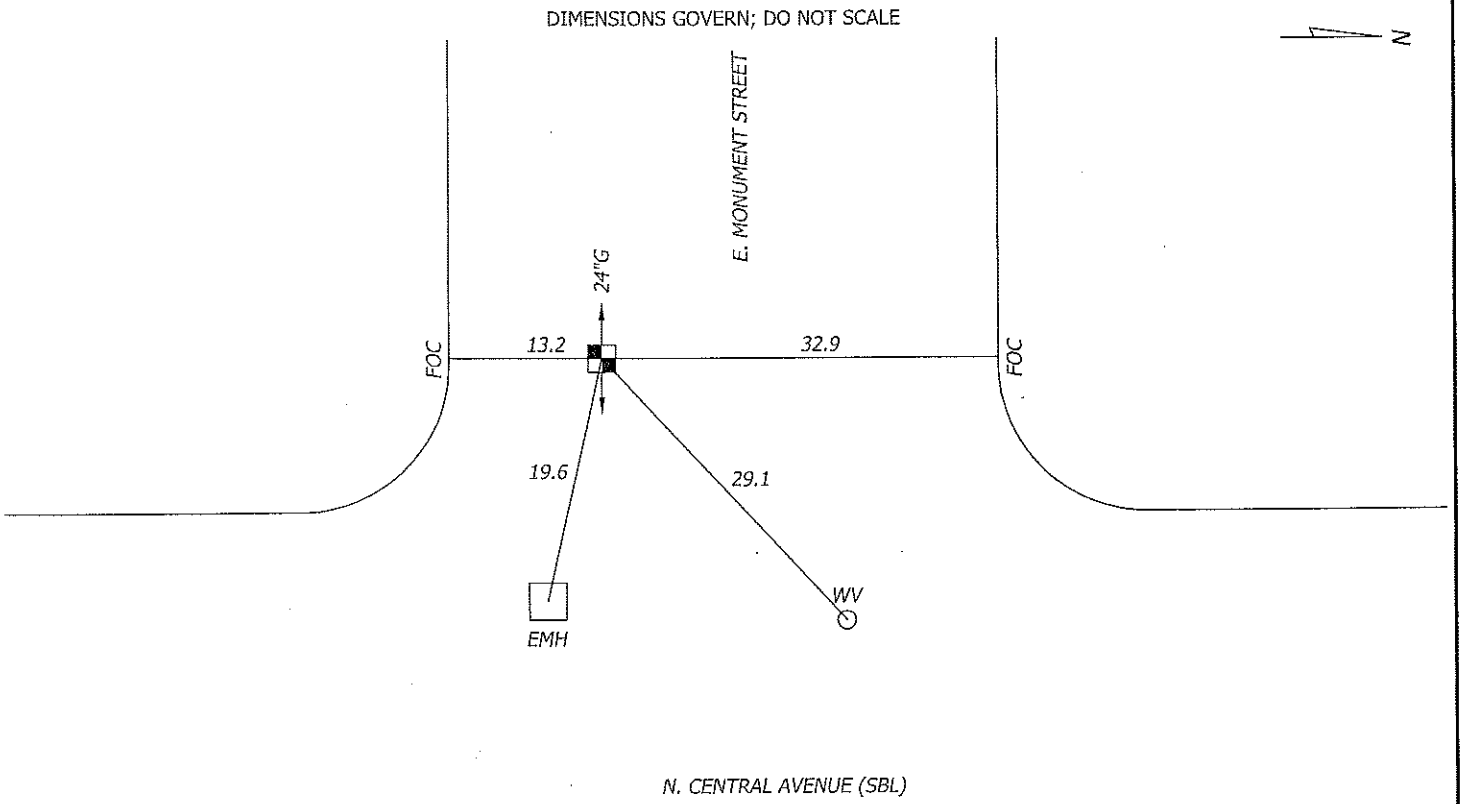

F.A.P. NO. STP-3057(4)N
SHA CONTRACT NO: BC320-001-815
BALTIMORE CITY CONTRACT NO. TR08310

A / I / DATA - TEST HOLE DATA SHEET

JOB #: 09134 TEST HOLE # : A38

PROJECT NAME:	CENTRAL AVENUE	EXCAVATION BY: A/I/DATA	DATE DUG: 12/29/09
PROJECT LOCATION:	BALTIMORE CITY, MARYLAND	FORM BY: RRB ASSISTED BY: GMC, JMK	CHECKED BY: SEW
CLIENT NAME:	WHITMAN REQUARDT AND ASSOCIATES, LLP	PAVING CONDITION:	FAIR
UTILITY REQUESTED:	10" WATER	GENERAL SOIL CONDITIONS:	SOFT MOIST CLAY
UTILITY FOUND:	10" CAST IRON WATER	UTILITY CONDITION:	FAIR
		MARKER SURVEYED BY:	A/I/DATA

SECTION VIEW OF TEST HOLE

NOT TO SCALE

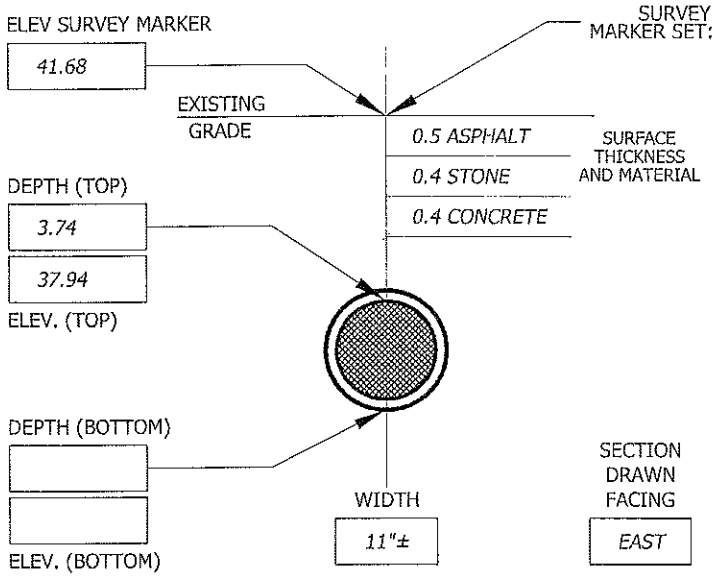

SURVEY MARKER SET: PK NAIL ABOVE: CROWN OF UTILITY MARKING TAPE INSTALLED: BLUE

CONTROL POINTS PROVIDED BY: WHITMAN REQUARDT AND ASSOCIATES, LLP

105	N= -2202.90	E= 4545.83	ELEV= 27.43
106	N= -1748.30	E= 4524.82	ELEV= 32.27

A/I/DATA MARKER:	NORTHING	EASTING	ELEVATION
	212.16	4375.59	41.68

NOTES:
TEST HOLE REVEALED PIPE JOINT AT THIS LOCATION. COVER TO JOINT = 3.60.

TEST HOLE DATA PRODUCED BY:
ACCURATE INFRASTRUCTURE DATA, INC.
1100 BATAVIA FARM ROAD, SUITE 200, BALTIMORE, MD 21237
PH: 410-686-5091 FAX: 410-686-5093
ALL MEASUREMENTS ARE SHOWN IN DECIMAL FEET EXCEPT WHERE NOTED

PLAN VIEW OF TEST HOLE

DIMENSIONS GOVERN; DO NOT SCALE

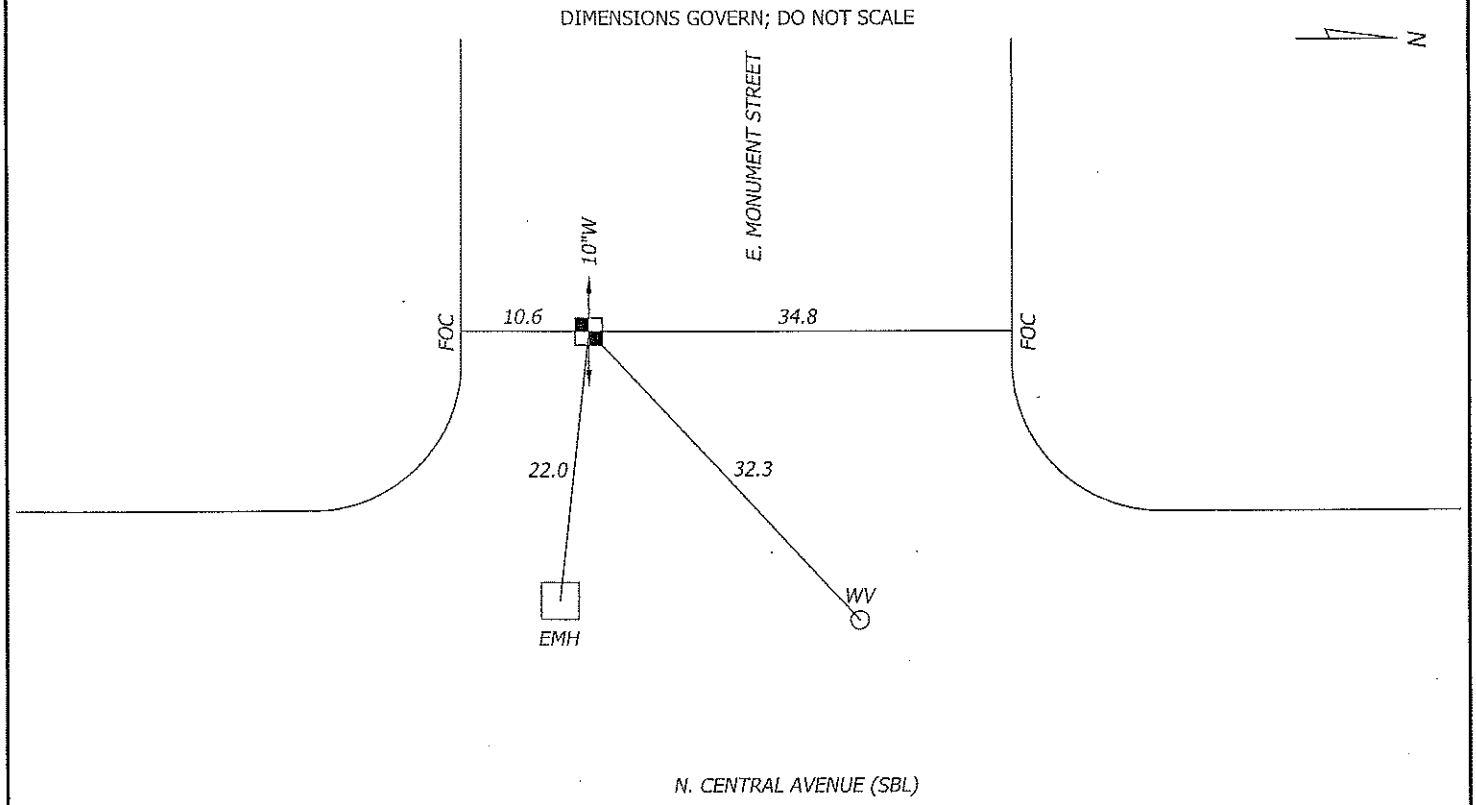

F.A.P. NO. STP-3057(4)N
SHA CONTRACT NO: BC320-001-815
BALTIMORE CITY CONTRACT NO. TR08310

A / I / DATA - TEST HOLE DATA SHEET

JOB #: 09134 TEST HOLE # : A39

PROJECT NAME:	CENTRAL AVENUE	EXCAVATION BY: A/I/DATA	DATE DUG: 01/04/10
PROJECT LOCATION:	BALTIMORE CITY, MARYLAND	FORM BY: RRB ASSISTED BY: KLS, JPW	CHECKED BY: SEW
CLIENT NAME:	WHITMAN REQUARDT AND ASSOCIATES, LLP	PAVING CONDITION:	FAIR
UTILITY REQUESTED:	12" STEAM & 20" CONDENSATE	GENERAL SOIL CONDITIONS:	SOFT MOIST CLAY ROCKY
UTILITY FOUND:	CONCRETE (SEE NOTE)	UTILITY CONDITION:	N/A
		MARKER SURVEYED BY:	A/I/DATA

SECTION VIEW OF TEST HOLE

NOT TO SCALE

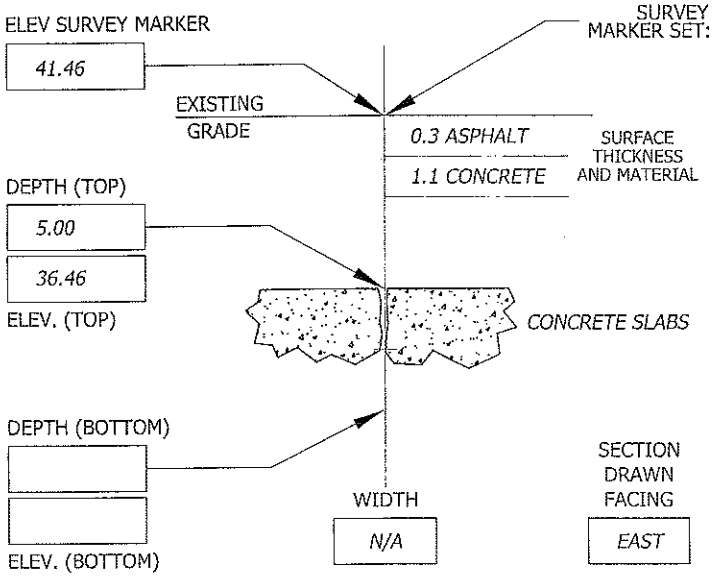

SURVEY MARKER SET: SEE NOTE ABOVE: N/A OF UTILITY MARKING TAPE INSTALLED: N/A

CONTROL POINTS PROVIDED BY: WHITMAN REQUARDT AND ASSOCIATES, LLP

105	N= -2202.90	E= 4545.83	ELEV= 27.43
106	N= -1748.30	E= 4524.82	ELEV= 32.27

A/I/DATA MARKER:	NORTHING	EASTING	ELEVATION
	243.12	4378.07	41.46

NOTES:
TEST HOLE PERFORMED TO A DEPTH OF 5.0'± AND ENCOUNTERED TWO LARGE CONCRETE SLABS. UNABLE TO CONTINUE EXCAVATION. PROBED THROUGH GAP BETWEEN THE TWO SLABS TO A DEPTH OF 9'±. NO UTILITY FOUND. NO SURVEY MARKER SET. ALL TIES AND SURVEY TAKEN TO CENTER OF HOLE.

TEST HOLE DATA PRODUCED BY:
ACCURATE INFRASTRUCTURE DATA, INC.
1100 BATAVIA FARM ROAD, SUITE 200, BALTIMORE, MD 21237
PH: 410-686-5091 FAX: 410-686-5093

ALL MEASUREMENTS ARE SHOWN IN DECIMAL FEET EXCEPT WHERE NOTED

PLAN VIEW OF TEST HOLE

DIMENSIONS GOVERN; DO NOT SCALE

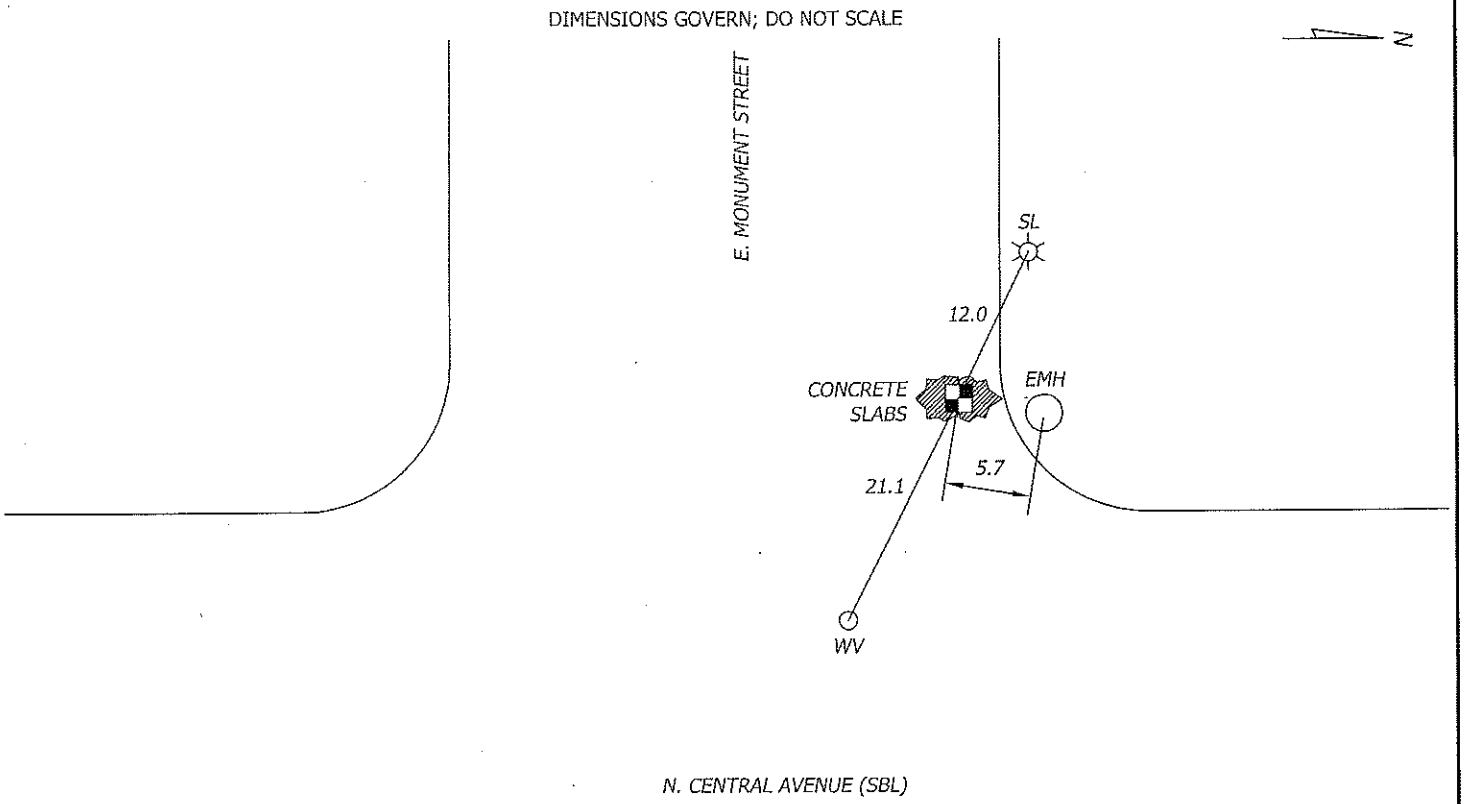

F.A.P. NO. STP-3057(4)N
SHA CONTRACT NO: BC320-001-815
BALTIMORE CITY CONTRACT NO. TR08310

A / I / DATA - TEST HOLE DATA SHEET

JOB #: 09134 TEST HOLE # : A40

PROJECT NAME:	CENTRAL AVENUE	EXCAVATION BY: A/I/DATA	DATE DUG: 12/22/09
PROJECT LOCATION:	BALTIMORE CITY, MARYLAND	FORM BY: RRB ASSISTED BY: CRB, JMK	CHECKED BY: SEW
CLIENT NAME:	WHITMAN REQUARDT AND ASSOCIATES, LLP	PAVING CONDITION:	FAIR
UTILITY REQUESTED:	10" WATER	GENERAL SOIL CONDITIONS:	HARD DRY CLAY ROCKY
UTILITY FOUND:	10" CAST IRON WATER	UTILITY CONDITION:	FAIR
		MARKER SURVEYED BY:	A/I/DATA

SECTION VIEW OF TEST HOLE
NOT TO SCALE

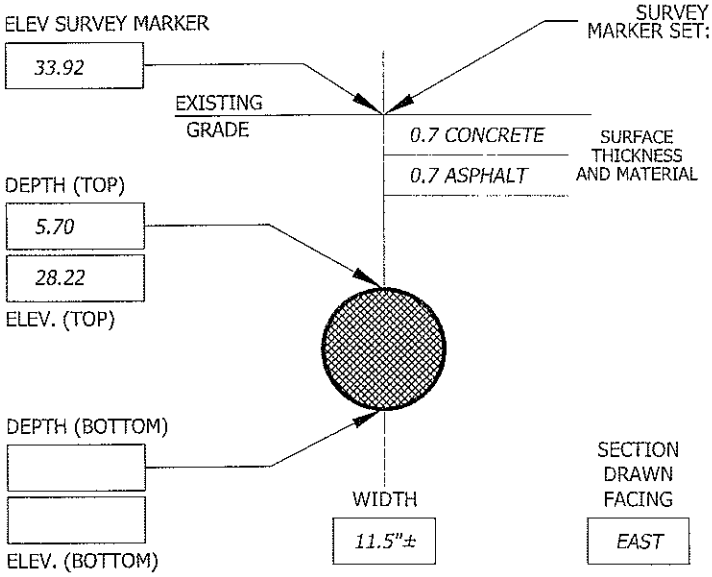

SURVEY MARKER SET: CHIS "X" ABOVE: CROWN OF UTILITY MARKING TAPE INSTALLED: BLUE

CONTROL POINTS PROVIDED BY: WHITMAN REQUARDT AND ASSOCIATES, LLP

105	N= -2202.90	E= 4545.83	ELEV= 27.43
106	N= -1748.30	E= 4524.82	ELEV= 32.27

A/I/DATA MARKER:	NORTHING	EASTING	ELEVATION
	-548.11	4501.17	33.92

NOTES:

TEST HOLE DATA PRODUCED BY:
ACCURATE INFRASTRUCTURE DATA, INC.
1100 BATAVIA FARM ROAD, SUITE 200, BALTIMORE, MD 21237
PH: 410-686-5091 FAX: 410-686-5093
ALL MEASUREMENTS ARE SHOWN IN DECIMAL FEET EXCEPT WHERE NOTED

PLAN VIEW OF TEST HOLE
DIMENSIONS GOVERN; DO NOT SCALE

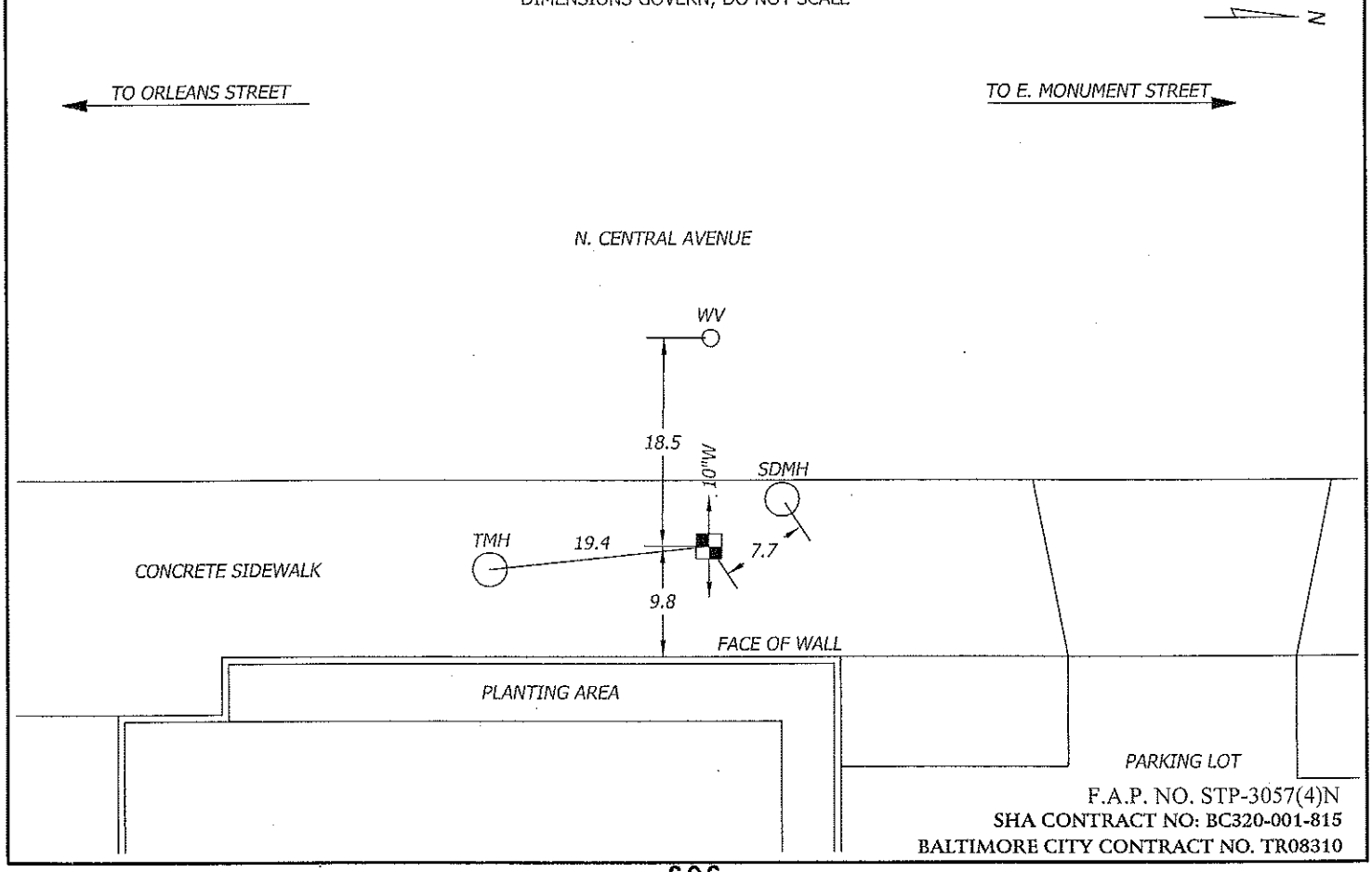

F.A.P. NO. STP-3057(4)N
SHA CONTRACT NO: BC320-001-815
BALTIMORE CITY CONTRACT NO. TR08310

A / I / DATA - TEST HOLE DATA SHEET

JOB #: 09134 TEST HOLE # : A41

PROJECT NAME:	CENTRAL AVENUE	EXCAVATION BY: A/I/DATA	DATE DUG: 01/05/10
PROJECT LOCATION:	BALTIMORE CITY, MARYLAND	FORM BY: RRB ASSISTED BY: JPW, JMK	CHECKED BY: SEW
CLIENT NAME:	WHITMAN REQUARDT AND ASSOCIATES, LLP	PAVING CONDITION:	GOOD
UTILITY REQUESTED:	14" STORM DRAIN	GENERAL SOIL CONDITIONS:	HARD DRY SAND CLAY ROCKY
UTILITY FOUND:	NO UTILITY FOUND	UTILITY CONDITION:	N/A
		MARKER SURVEYED BY:	A/I/DATA

SECTION VIEW OF TEST HOLE

NOT TO SCALE

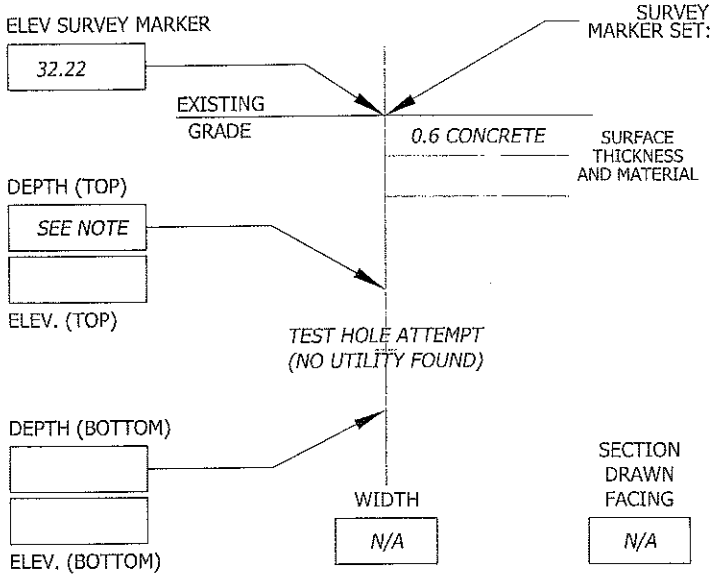

SURVEY MARKER SET: SEE NOTE ABOVE: N/A OF UTILITY MARKING TAPE INSTALLED: N/A

CONTROL POINTS PROVIDED BY: WHITMAN REQUARDT AND ASSOCIATES, LLP

105	N= -2202.90	E= 4545.83	ELEV= 27.43
106	N= -1748.30	E= 4524.82	ELEV= 32.27

A/I/DATA MARKER:	NORTHING	EASTING	ELEVATION
	-1499.10	4463.50	32.22

NOTES:
TEST HOLE PERFORMED TO A DEPTH OF 3'± AND ENCOUNTERED EXTREMELY HARD SOILS. UNABLE TO CONTINE EXCAVATION. NO UTILITY FOUND. NO SURVEY MARKER SET. ALL TIES AND SURVEY TAKEN TO CENTER OF HOLE.

TEST HOLE DATA PRODUCED BY:
ACCURATE INFRASTRUCTURE DATA, INC.
1100 BATAVIA FARM ROAD, SUITE 200, BALTIMORE, MD 21237
PH: 410-686-5091 FAX: 410-686-5093
ALL MEASUREMENTS ARE SHOWN IN DECIMAL FEET EXCEPT WHERE NOTED

PLAN VIEW OF TEST HOLE

DIMENSIONS GOVERN; DO NOT SCALE

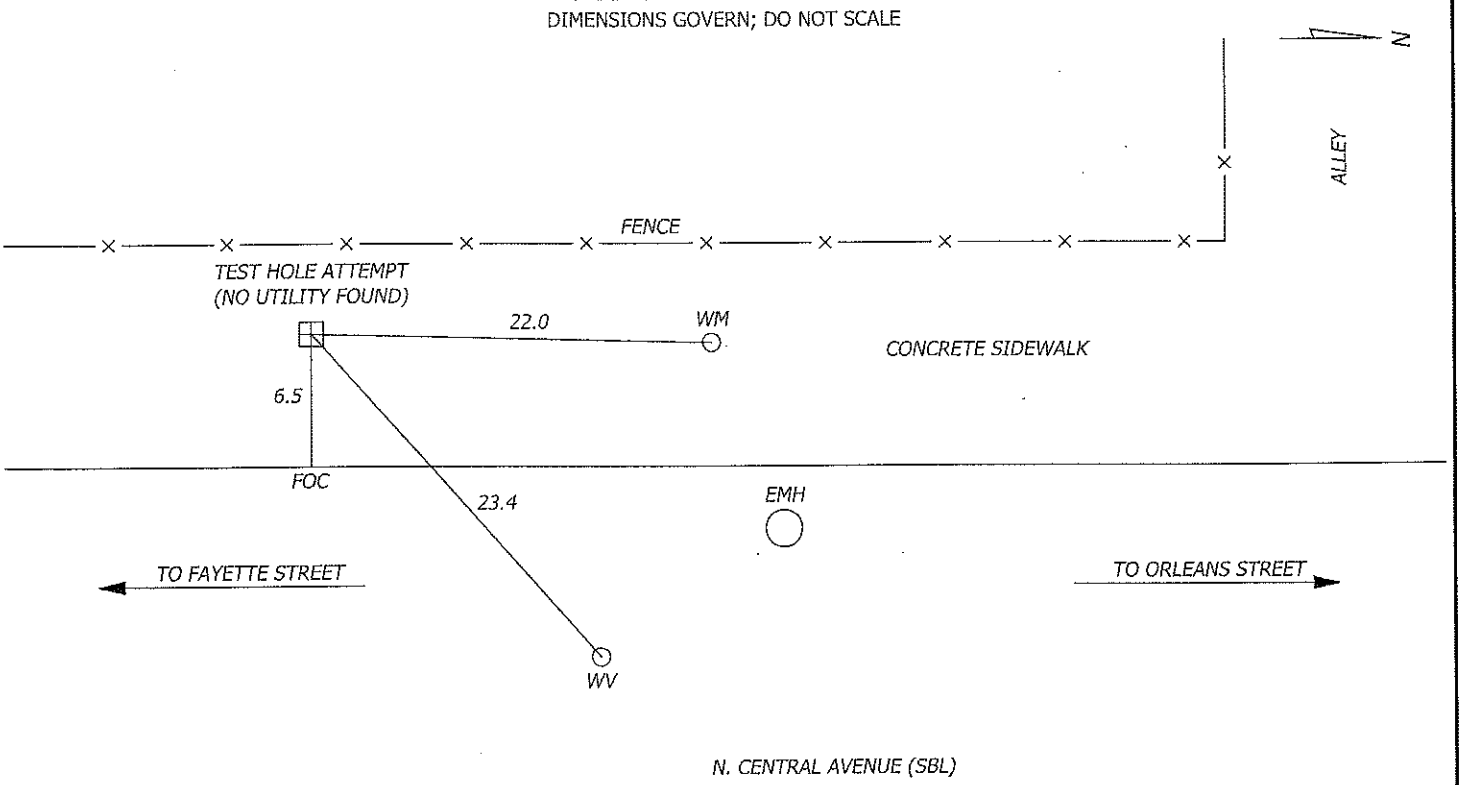

F.A.P. NO. STP-3057(4)N
SHA CONTRACT NO: BC320-001-815
BALTIMORE CITY CONTRACT NO. TR08310

A / I / DATA - TEST HOLE DATA SHEET

JOB #: 09134 TEST HOLE # : A42

PROJECT NAME:	CENTRAL AVENUE	EXCAVATION BY: A/I/DATA	DATE DUG: 12/23/09
PROJECT LOCATION:	BALTIMORE CITY, MARYLAND	FORM BY: RRB ASSISTED BY: CRB, JMK	CHECKED BY: SEW
CLIENT NAME:	WHITMAN REQUARDT AND ASSOCIATES, LLP	PAVING CONDITION:	POOR
UTILITY REQUESTED:	TELEPHONE	GENERAL SOIL CONDITIONS:	SOFT MOIST SAND
UTILITY FOUND:	CAST IN PLACE CONCRETE TELEPHONE DUCT	UTILITY CONDITION:	GOOD
		MARKER SURVEYED BY:	A/I/DATA

SECTION VIEW OF TEST HOLE

NOT TO SCALE

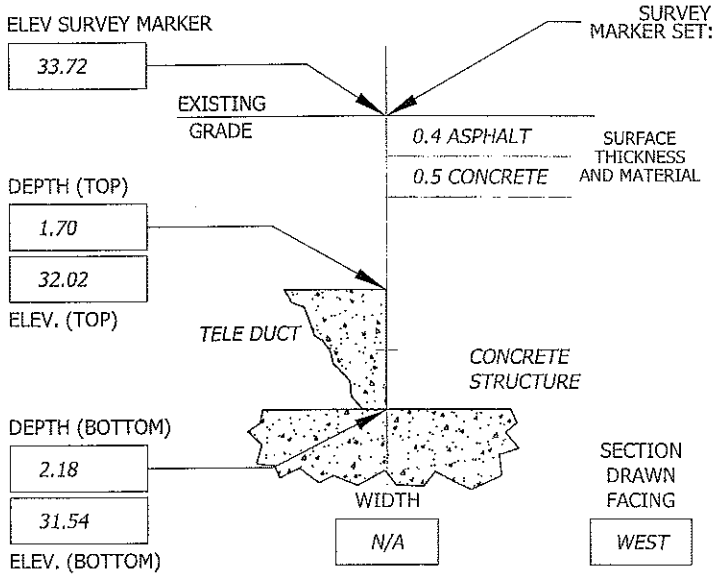

SURVEY MARKER SET: PK NAIL ABOVE: EDGE OF UTILITY MARKING TAPE INSTALLED: ORANGE

CONTROL POINTS PROVIDED BY: WHITMAN REQUARDT AND ASSOCIATES, LLP

105	N= -2202.90	E= 4545.83	ELEV= 27.43
106	N= -1748.30	E= 4524.82	ELEV= 32.27

A/I/DATA MARKER:	NORTHING	EASTING	ELEVATION
	-1137.26	4456.18	33.72

NOTES:
PK NAIL SET OVER NORTH EDGE OF DUCT. TEST HOLE ALSO REVEALED SAME CONCRETE STRUCTURE AS DOCUMENTED IN TH-A17. TOP OF CONCRETE STRUCTURE = 2.19. SEE TEST HOLE DATA SHEET #A-17 FOR ADDITIONAL INFORMATION ON CONCRETE STRUCTURE AND SOUTH EDGE OF DUCT.

TEST HOLE DATA PRODUCED BY:
ACCURATE INFRASTRUCTURE DATA, INC.
1100 BATAVIA FARM ROAD, SUITE 200, BALTIMORE, MD 21237
PH: 410-686-5091 FAX: 410-686-5093
ALL MEASUREMENTS ARE SHOWN IN DECIMAL FEET EXCEPT WHERE NOTED

PLAN VIEW OF TEST HOLE

DIMENSIONS GOVERN; DO NOT SCALE

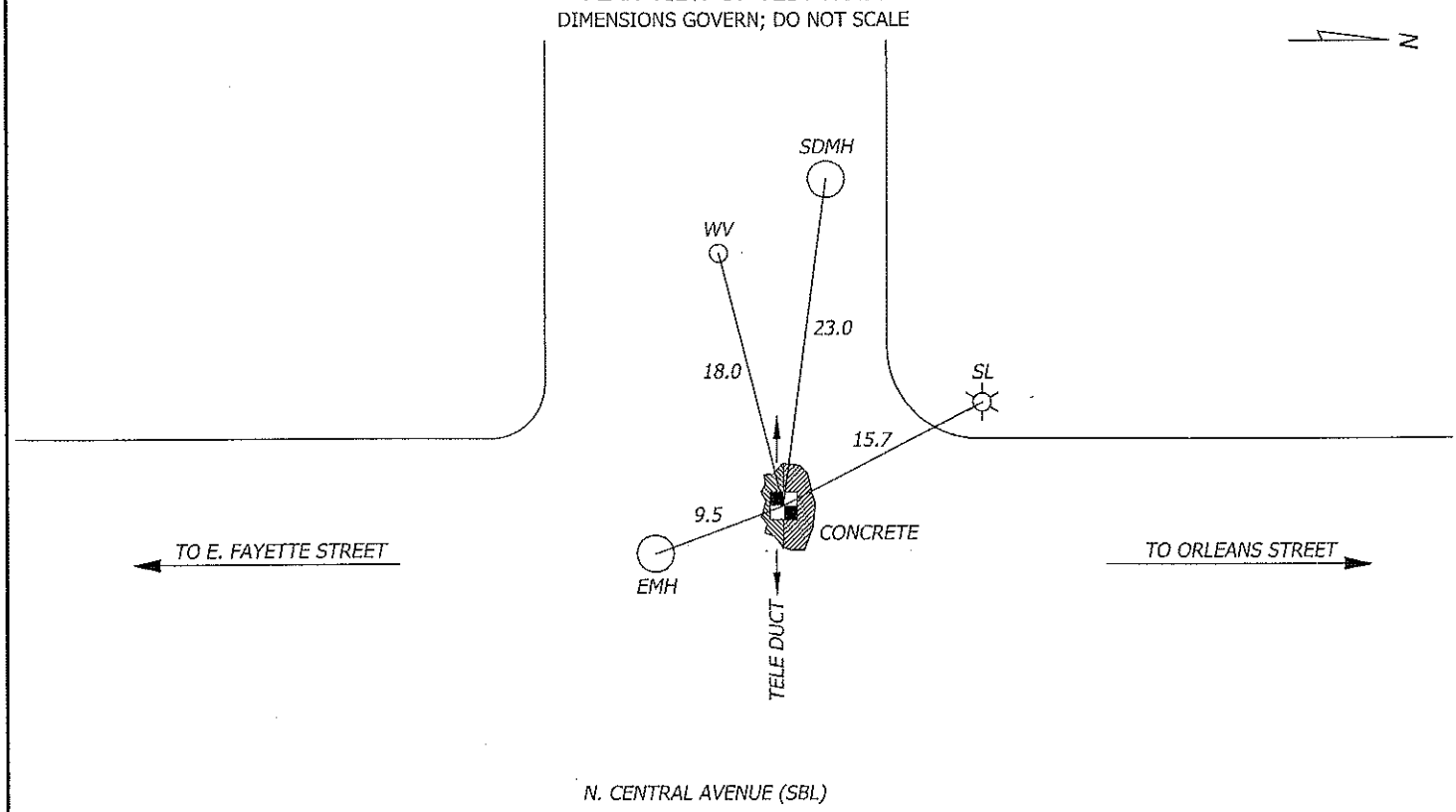

F.A.P. NO. STP-3057(4)N
SHA CONTRACT NO: BC320-001-815
BALTIMORE CITY CONTRACT NO. TR08310

A / I / DATA - TEST HOLE DATA SHEET

JOB #: 09134 TEST HOLE # : A43

PROJECT NAME:	CENTRAL AVENUE	EXCAVATION BY: A/I/DATA	DATE DUG: 12/28/09
PROJECT LOCATION:	BALTIMORE CITY, MARYLAND	FORM BY: RRB ASSISTED BY: TDM, GMC, JMK	CHECKED BY: SEW
CLIENT NAME:	WHITMAN REQUARDT AND ASSOCIATES, LLP	PAVING CONDITION:	FAIR
UTILITY REQUESTED:	TELEPHONE	GENERAL SOIL CONDITIONS:	HARD DRY SAND ROCKY
UTILITY FOUND:	CAST IN PLACE CONCRETE TLEPHONE DUCT	UTILITY CONDITION:	GOOD
		MARKER SURVEYED BY:	A/I/DATA

SECTION VIEW OF TEST HOLE

NOT TO SCALE

ELEV SURVEY MARKER: 32.52

SURVEY MARKER SET: PK NAIL ABOVE: TOP OF UTILITY MARKING TAPE INSTALLED: ORANGE

EXISTING GRADE

0.6 ASPHALT

0.8 CONCRETE

SURFACE THICKNESS AND MATERIAL

DEPTH (TOP): 5.24

ELEV. (TOP): 27.28

DEPTH (BOTTOM):

ELEV. (BOTTOM):

WIDTH: N/A

SECTION DRAWN FACING: N/A

CONTROL POINTS PROVIDED BY: WHITMAN REQUARDT AND ASSOCIATES, LLP

105	N= -2202.90	E= 4545.83	ELEV= 27.43
106	N= -1748.30	E= 4524.82	ELEV= 32.27

A/I/DATA MARKER:	NORTHING	EASTING	ELEVATION
	-973.11	4444.58	32.52

NOTES:
TEST HOLE REVEALED TOP OF TELEPHONE DUCT. UNABLE TO EXPOSE EDGE OF DUCT.

TEST HOLE DATA PRODUCED BY:
ACCURATE INFRASTRUCTURE DATA, INC.
1100 BATAVIA FARM ROAD, SUITE 200, BALTIMORE, MD 21237
PH: 410-686-5091 FAX: 410-686-5093
ALL MEASUREMENTS ARE SHOWN IN DECIMAL FEET EXCEPT WHERE NOTED

PLAN VIEW OF TEST HOLE

DIMENSIONS GOVERN; DO NOT SCALE

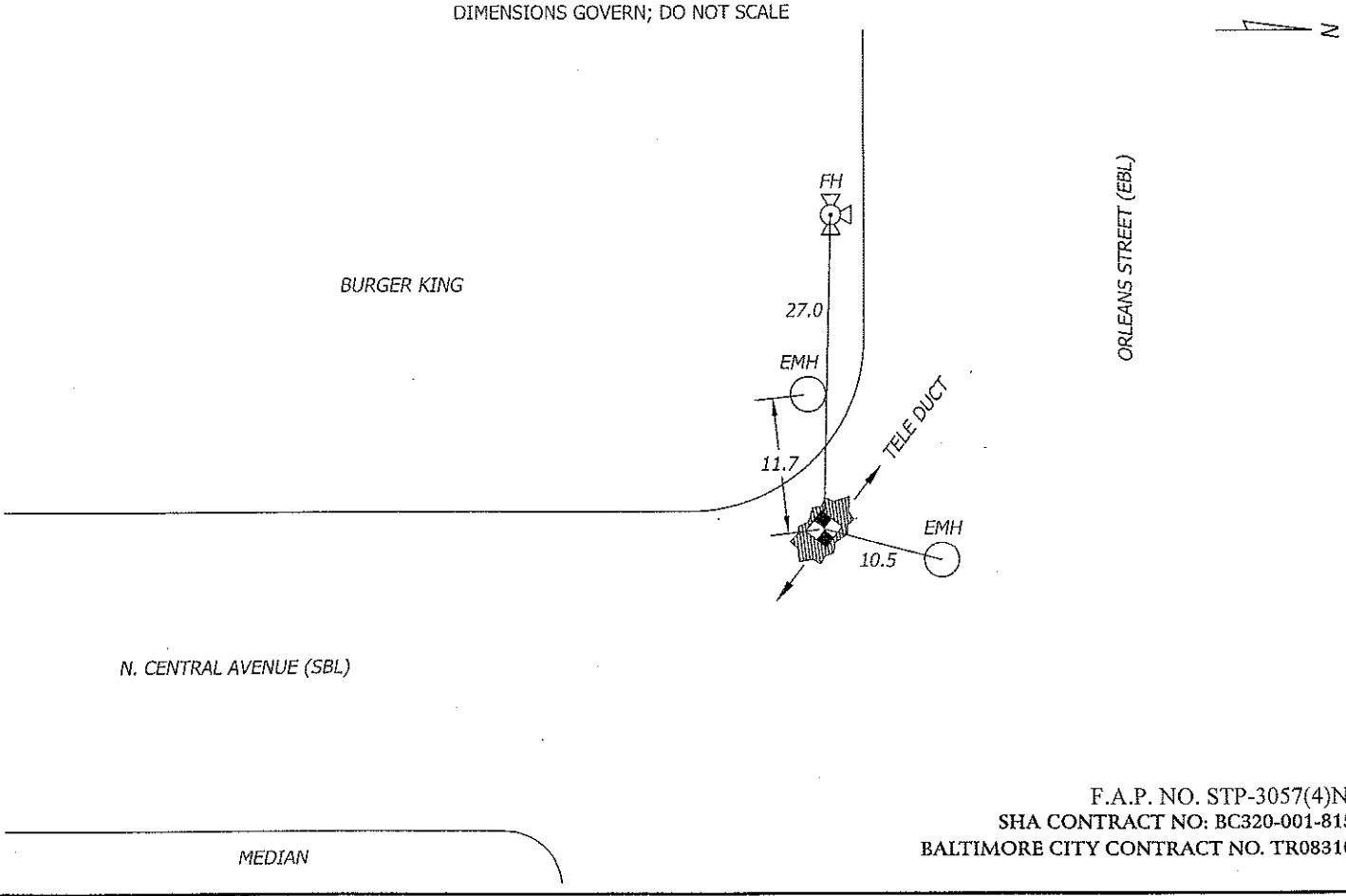

F.A.P. NO. STP-3057(4)N
SHA CONTRACT NO: BC320-001-815
BALTIMORE CITY CONTRACT NO. TR08310

A / I / DATA - TEST HOLE DATA SHEET

JOB #: 09134 TEST HOLE # : B01

PROJECT NAME:	CENTRAL AVENUE	EXCAVATION BY: A/I/DATA	DATE DUG: 12/09/09
PROJECT LOCATION:	BALTIMORE CITY, MARYLAND	FORM BY: MCG ASSISTED BY: RRB, TDL, KLS	CHECKED BY: SEW
CLIENT NAME:	WHITMAN REQUARDT AND ASSOCIATES, LLP	PAVING CONDITION:	GOOD
UTILITY REQUESTED:	6" WATER	GENERAL SOIL CONDITIONS:	HARD MOIST ROCKY
UTILITY FOUND:	6" CAST IRON WATER	UTILITY CONDITION:	FAIR (SEE NOTE)
		MARKER SURVEYED BY:	A/I/DATA

SURVEY MARKER SET: PK NAIL ABOVE: CROWN OF UTILITY MARKING TAPE INSTALLED: BLUE

SECTION VIEW OF TEST HOLE

NOT TO SCALE

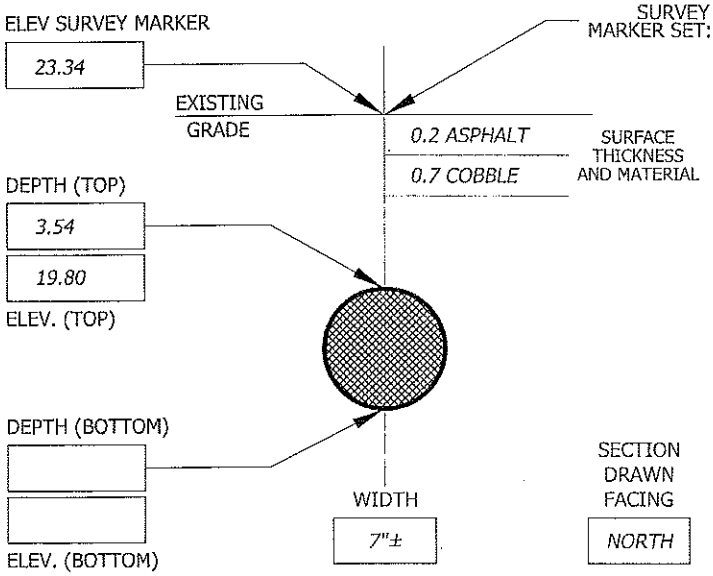

CONTROL POINTS PROVIDED BY: WHITMAN REQUARDT AND ASSOCIATES, LLP

105	N= -2202.90	E= 4545.83	ELEV= 27.43
106	N= -1748.30	E= 4524.82	ELEV= 32.27

A/I/DATA MARKER:	NORTHING	EASTING	ELEVATION
	-2420.27	4582.13	23.34

NOTES:
SIZE IS APPROXIMATE DUE TO CORROSION ON PIPE.

TEST HOLE DATA PRODUCED BY:
ACCURATE INFRASTRUCTURE DATA, INC.
1100 BATAVIA FARM ROAD, SUITE 200, BALTIMORE, MD 21237
PH: 410-686-5091 FAX: 410-686-5093
ALL MEASUREMENTS ARE SHOWN IN DECIMAL FEET EXCEPT WHERE NOTED

PLAN VIEW OF TEST HOLE

DIMENSIONS GOVERN; DO NOT SCALE

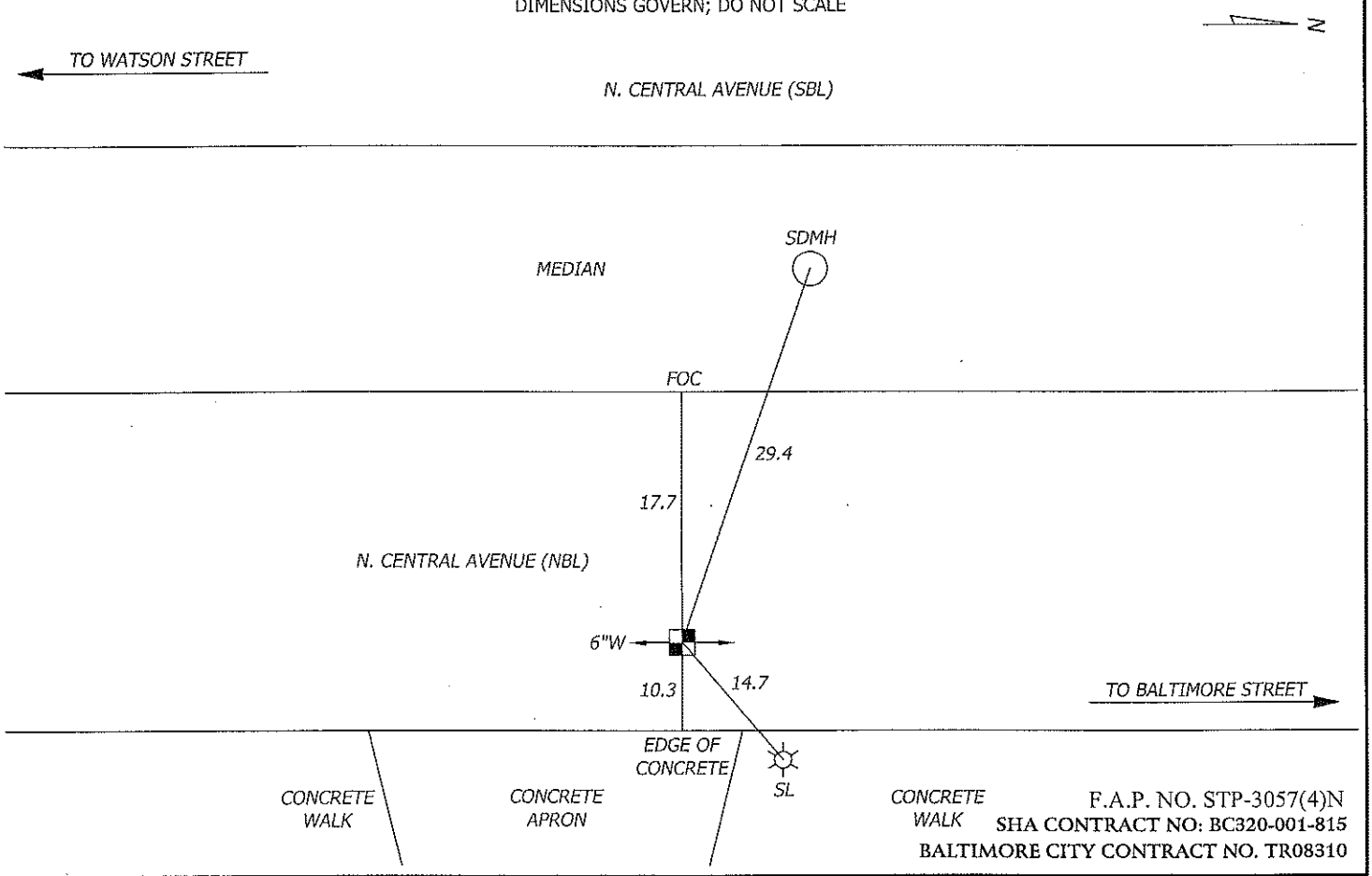

F.A.P. NO. STP-3057(4)N
SHA CONTRACT NO: BC320-001-815
BALTIMORE CITY CONTRACT NO. TR08310

A / I / DATA - TEST HOLE DATA SHEET

JOB #: 09134 TEST HOLE # : B02

PROJECT NAME:	CENTRAL AVENUE	EXCAVATION BY: A/I/DATA	DATE DUG: 12/09/09
PROJECT LOCATION:	BALTIMORE CITY, MARYLAND	FORM BY: MCG ASSISTED BY: RRB, TDL, KLS	CHECKED BY: SEW
CLIENT NAME:	WHITMAN REQUARDT AND ASSOCIATES, LLP	PAVING CONDITION:	GOOD
UTILITY REQUESTED:	4" GAS	GENERAL SOIL CONDITIONS:	HARD MOIST ROCKY
UTILITY FOUND:	4" CAST IRON GAS	UTILITY CONDITION:	FAIR
		MARKER SURVEYED BY:	A/I/DATA

SECTION VIEW OF TEST HOLE

NOT TO SCALE

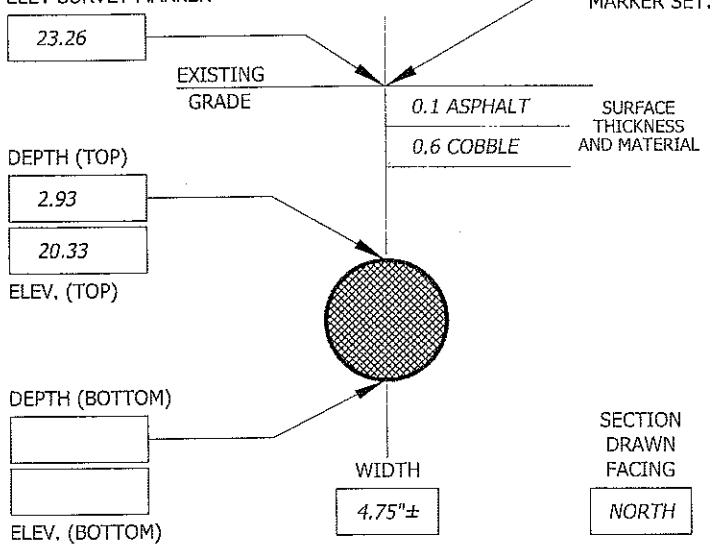

SURVEY MARKER SET: PK NAIL ABOVE: CROWN OF UTILITY MARKING TAPE INSTALLED: YELLOW

CONTROL POINTS PROVIDED BY: WHITMAN REQUARDT AND ASSOCIATES, LLP

105	N= -2202.90	E= 4545.83	ELEV= 27.43
106	N= -1748.30	E= 4524.82	ELEV= 32.27

A/I/DATA MARKER:	NORTHING	EASTING	ELEVATION
	-2420.16	4585.28	23.26

NOTES:

TEST HOLE DATA PRODUCED BY:
ACCURATE INFRASTRUCTURE DATA, INC.
1100 BATAVIA FARM ROAD, SUITE 200, BALTIMORE, MD 21237
PH: 410-686-5091 FAX: 410-686-5093
ALL MEASUREMENTS ARE SHOWN IN DECIMAL FEET EXCEPT WHERE NOTED

PLAN VIEW OF TEST HOLE

DIMENSIONS GOVERN; DO NOT SCALE

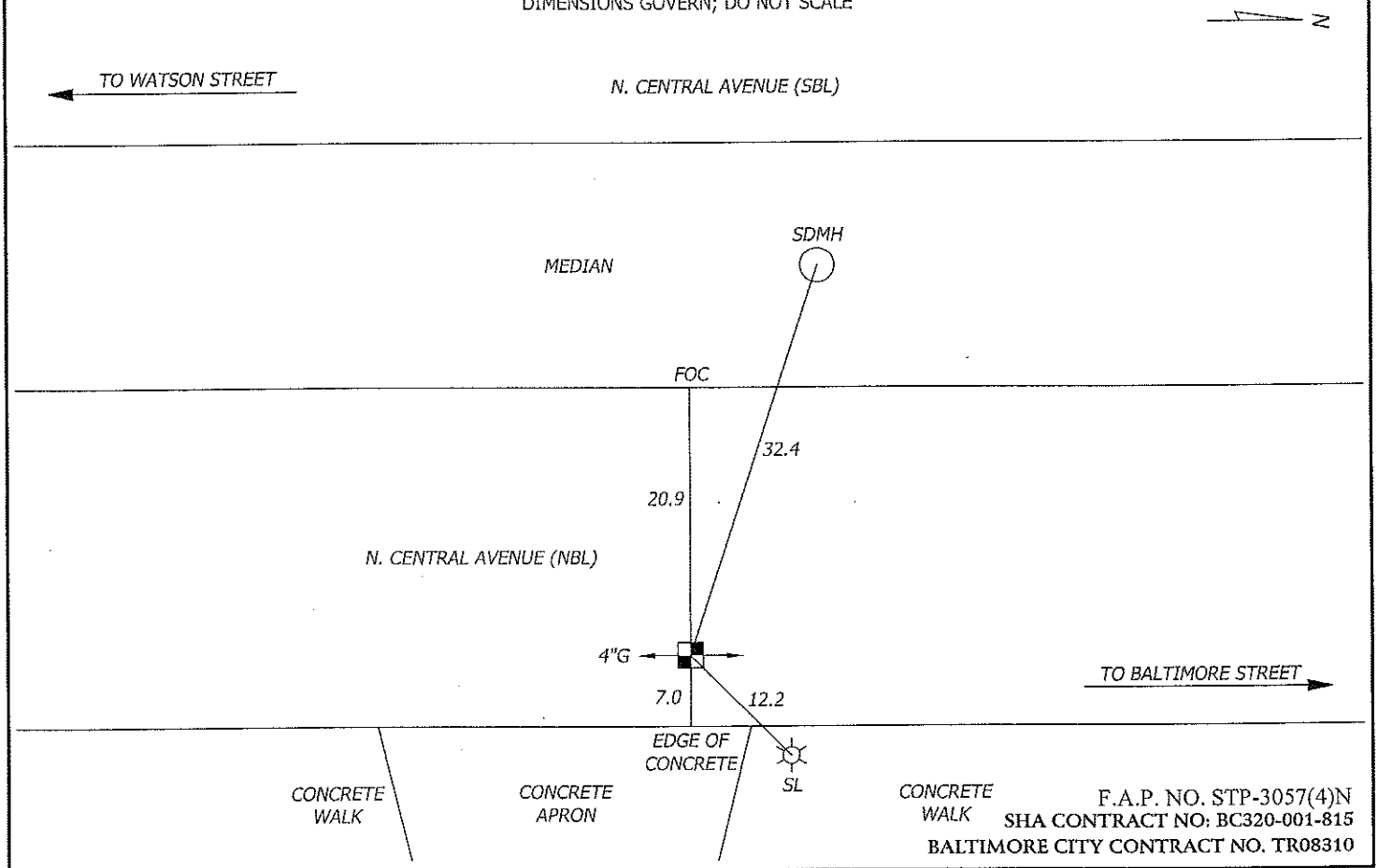

F.A.P. NO. STP-3057(4)N
SHA CONTRACT NO: BC320-001-815
BALTIMORE CITY CONTRACT NO. TR08310

A / I / DATA - TEST HOLE DATA SHEET

JOB #: 09134 TEST HOLE # : B03

PROJECT NAME:	CENTRAL AVENUE	EXCAVATION BY: A/I/DATA	DATE DUG: 12/17/09
PROJECT LOCATION:	BALTIMORE CITY, MARYLAND	FORM BY: RRB ASSISTED BY: TDL	CHECKED BY: SEW
CLIENT NAME:	WHITMAN REQUARDT AND ASSOCIATES, LLP	PAVING CONDITION:	FAIR
UTILITY REQUESTED:	WATER	GENERAL SOIL CONDITIONS:	SOFT MOIST CLAY ROCKY
UTILITY FOUND:	NO UTILITY FOUND	UTILITY CONDITION:	N/A
		MARKER SURVEYED BY:	A/I/DATA

SECTION VIEW OF TEST HOLE

NOT TO SCALE

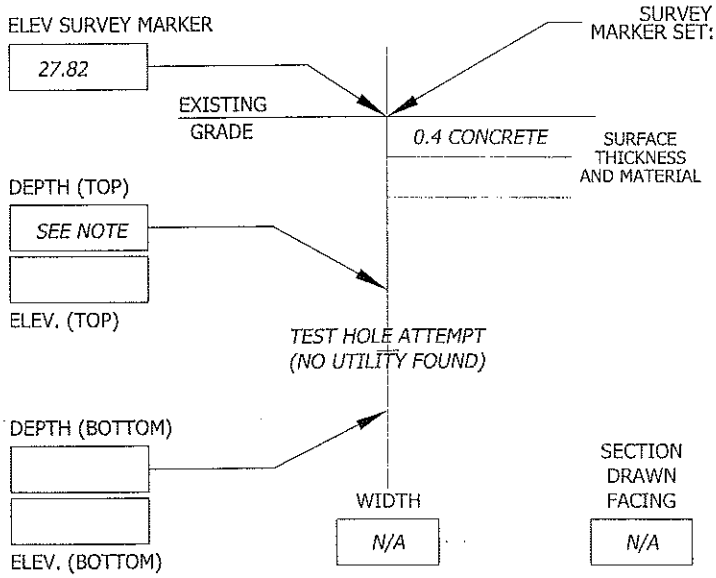

SURVEY MARKER SET: SEE NOTE ABOVE: N/A OF UTILITY MARKING TAPE INSTALLED: N/A

CONTROL POINTS PROVIDED BY: WHITMAN REQUARDT AND ASSOCIATES, LLP

105	N= -2202.90	E= 4545.83	ELEV= 27.43
106	N= -1748.30	E= 4524.82	ELEV= 32.27

A/I/DATA MARKER:	NORTHING	EASTING	ELEVATION
	-2274.48	4486.43	27.82

NOTES:
TEST HOLE PERFORMED AT REQUESTED LOCATION TO A DEPTH OF 7'±. NO UTILITY FOUND. NO SURVEY MARKER SET. ALL TIES AND SURVEY TAKEN TO CENTER OF HOLE.

TEST HOLE DATA PRODUCED BY:
ACCURATE INFRASTRUCTURE DATA, INC.
1100 BATAVIA FARM ROAD, SUITE 200, BALTIMORE, MD 21237
PH: 410-686-5091 FAX: 410-686-5093
ALL MEASUREMENTS ARE SHOWN IN DECIMAL FEET EXCEPT WHERE NOTED

PLAN VIEW OF TEST HOLE

DIMENSIONS GOVERN; DO NOT SCALE

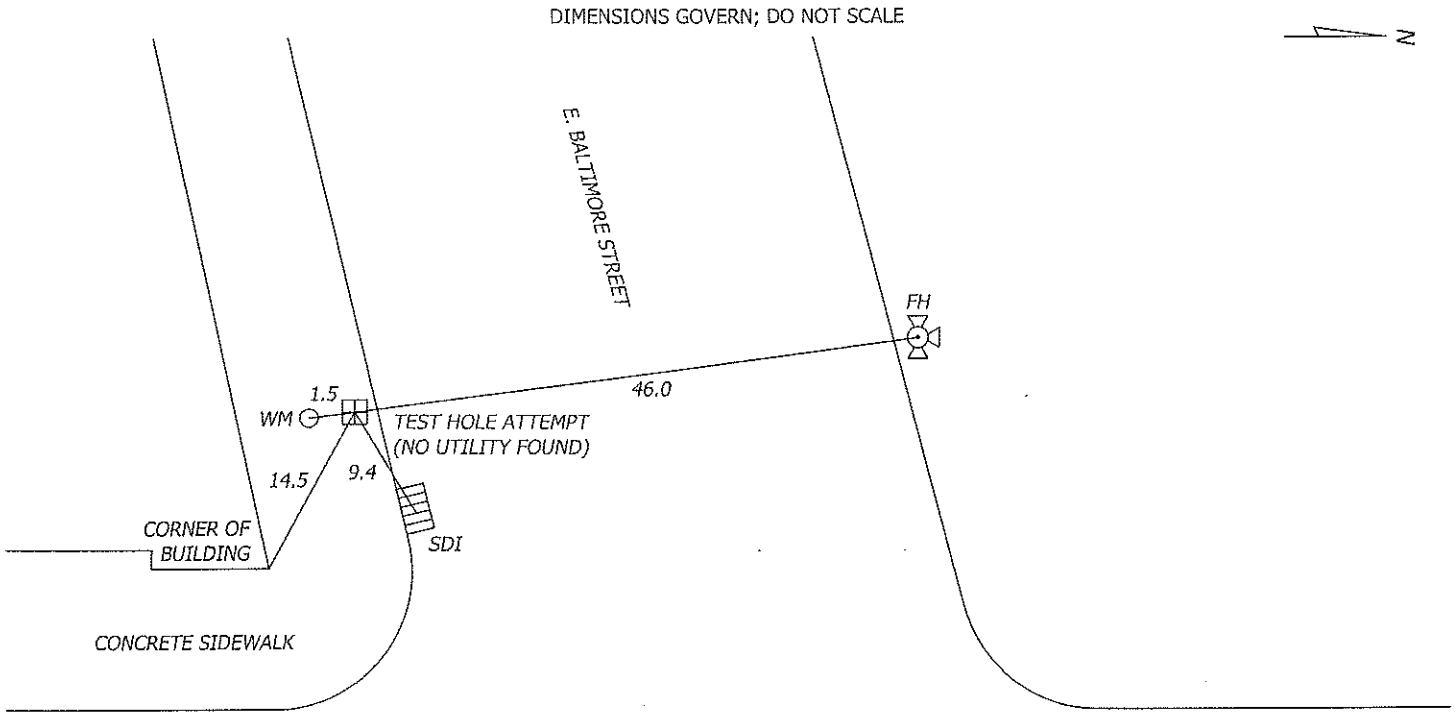

F.A.P. NO. STP-3057(4)N
SHA CONTRACT NO: BC320-001-815
BALTIMORE CITY CONTRACT NO. TR08310

A / I / DATA - TEST HOLE DATA SHEET

JOB #: 09134 TEST HOLE # : B04

PROJECT NAME:	CENTRAL AVENUE	EXCAVATION BY: A/I/DATA	DATE DUG: 12/17/09
PROJECT LOCATION:	BALTIMORE CITY, MARYLAND	FORM BY: RRB ASSISTED BY: TDL	CHECKED BY: SEW
CLIENT NAME:	WHITMAN REQUARDT AND ASSOCIATES, LLP	PAVING CONDITION:	FAIR
UTILITY REQUESTED:	8" GAS	GENERAL SOIL CONDITIONS:	SOFT DRY SAND CLAY ROCKY
UTILITY FOUND:	8" GAS	UTILITY CONDITION:	POOR (SEE NOTE)
		MARKER SURVEYED BY:	A/I/DATA

SECTION VIEW OF TEST HOLE

NOT TO SCALE

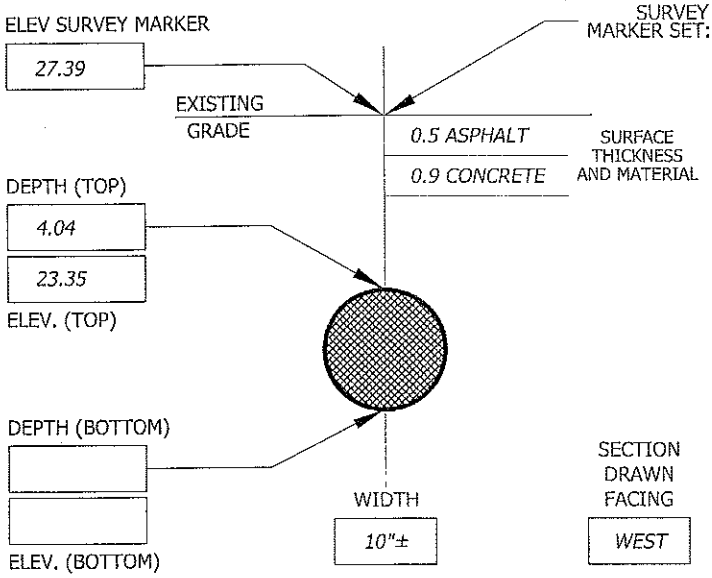

SURVEY MARKER SET: PK NAIL ABOVE: CROWN OF UTILITY MARKING TAPE INSTALLED: YELLOW

CONTROL POINTS PROVIDED BY: WHITMAN REQUARDT AND ASSOCIATES, LLP

105	N= -2202.90	E= 4545.83	ELEV= 27.43
106	N= -1748.30	E= 4524.82	ELEV= 32.27

A/I/DATA MARKER:	NORTHING	EASTING	ELEVATION
	-2264.50	4493.26	27.39

NOTES:
UNABLE TO OBTAIN MATERIAL DUE TO CORROSION ON PIPE.

TEST HOLE DATA PRODUCED BY:
ACCURATE INFRASTRUCTURE DATA, INC.
1100 BATAVIA FARM ROAD, SUITE 200, BALTIMORE, MD 21237
PH: 410-686-5091 FAX: 410-686-5093
ALL MEASUREMENTS ARE SHOWN IN DECIMAL FEET EXCEPT WHERE NOTED

PLAN VIEW OF TEST HOLE

DIMENSIONS GOVERN; DO NOT SCALE

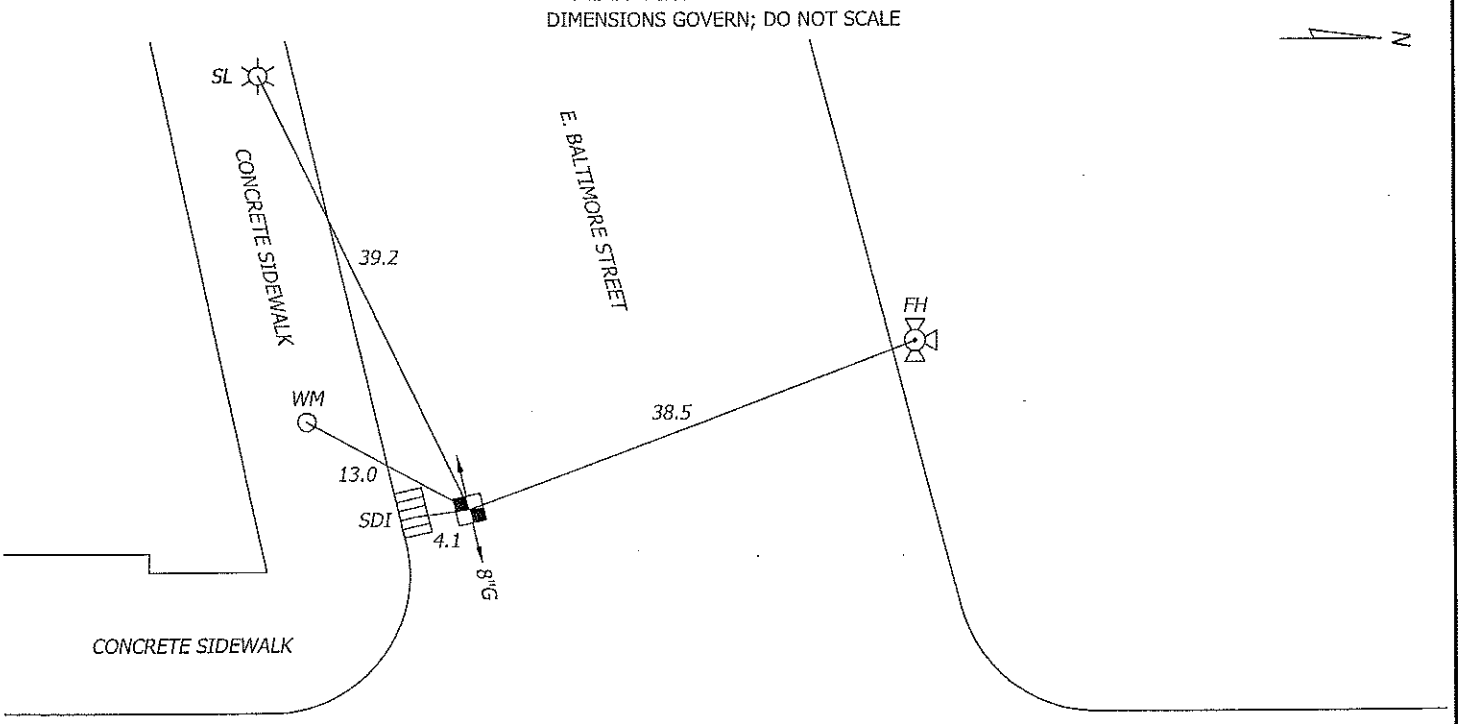

N. CENTRAL AVENUE (SBL)

F.A.P. NO. STP-3057(4)N
SHA CONTRACT NO: BC320-001-815
BALTIMORE CITY CONTRACT NO. TR08310

A / I / DATA - TEST HOLE DATA SHEET

JOB #: 09134 TEST HOLE # : B05

PROJECT NAME:	CENTRAL AVENUE	EXCAVATION BY: A/I/DATA	DATE DUG: 12/09/09
PROJECT LOCATION:	BALTIMORE CITY, MARYLAND	FORM BY: MCG ASSISTED BY: RRB, TDL, KLS	CHECKED BY: SEW
CLIENT NAME:	WHITMAN REQUARDT AND ASSOCIATES, LLP	PAVING CONDITION:	GOOD
UTILITY REQUESTED:	6" WATER	GENERAL SOIL CONDITIONS:	SOFT MOIST SAND ROCKY
UTILITY FOUND:	6" CAST IRON WATER	UTILITY CONDITION:	FAIR (SEE NTOE)
		MARKER SURVEYED BY:	A/I/DATA

SECTION VIEW OF TEST HOLE

NOT TO SCALE

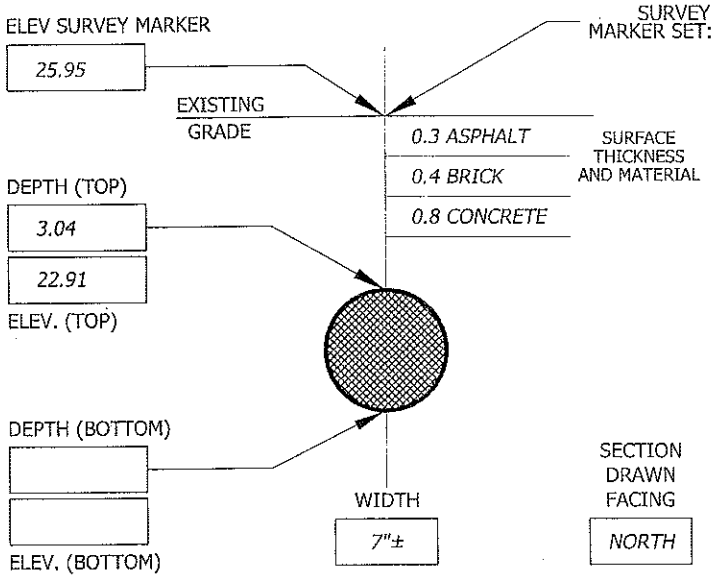

SURVEY MARKER SET: PK NAIL ABOVE: CROWN OF UTILITY MARKING TAPE INSTALLED: BLUE

CONTROL POINTS PROVIDED BY: WHITMAN REQUARDT AND ASSOCIATES, LLP

105	N= -2202.90	E= 4545.83	ELEV= 27.43
106	N= -1748.30	E= 4524.82	ELEV= 32.27

A/I/DATA MARKER:	NORTHING	EASTING	ELEVATION
	-2197.60	4572.30	25.95

NOTES:
SIZE IS APPROXIMATE DUE TO CORROSION ON PIPE.

TEST HOLE DATA PRODUCED BY:
ACCURATE INFRASTRUCTURE DATA, INC.
1100 BATAVIA FARM ROAD, SUITE 200, BALTIMORE, MD 21237
PH: 410-686-5091 FAX: 410-686-5093
ALL MEASUREMENTS ARE SHOWN IN DECIMAL FEET EXCEPT WHERE NOTED

PLAN VIEW OF TEST HOLE

DIMENSIONS GOVERN; DO NOT SCALE

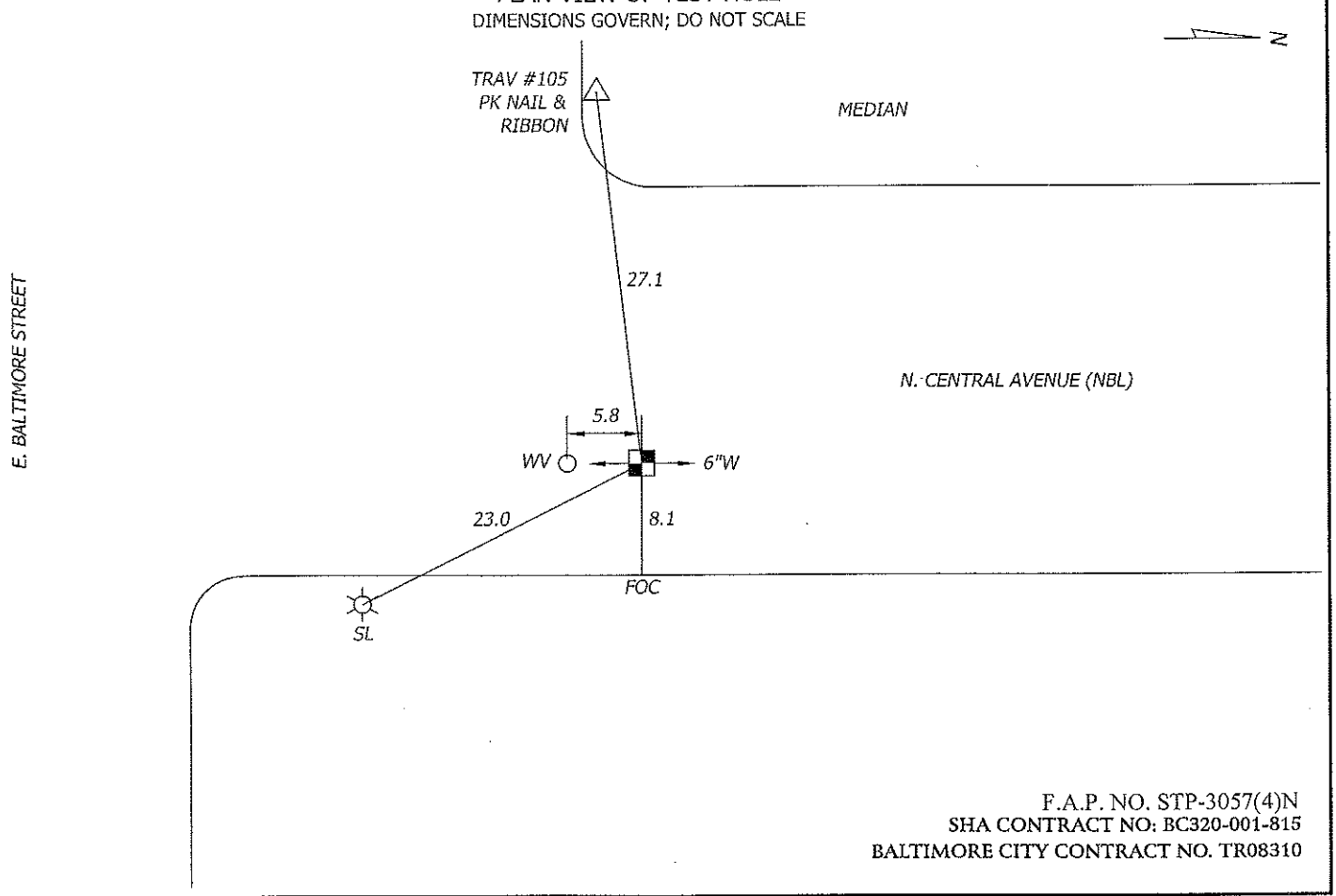

F.A.P. NO. STP-3057(4)N
SHA CONTRACT NO: BC320-001-815
BALTIMORE CITY CONTRACT NO. TR08310

A / I / DATA - TEST HOLE DATA SHEET

JOB #: 09134 TEST HOLE # : B06

PROJECT NAME:	CENTRAL AVENUE	EXCAVATION BY: A/I/DATA	DATE DUG: 12/10/09
PROJECT LOCATION:	BALTIMORE CITY, MARYLAND	FORM BY: MCG ASSISTED BY: KLS	CHECKED BY: SEW
CLIENT NAME:	WHITMAN REQUARDT AND ASSOCIATES, LLP	PAVING CONDITION:	FAIR
UTILITY REQUESTED:	6" WATER	GENERAL SOIL CONDITIONS:	HARD MOIST SAND ROCKY
UTILITY FOUND:	6" CAST IRON WATER	UTILITY CONDITION:	GOOD
		MARKER SURVEYED BY:	A/I/DATA

SECTION VIEW OF TEST HOLE

NOT TO SCALE

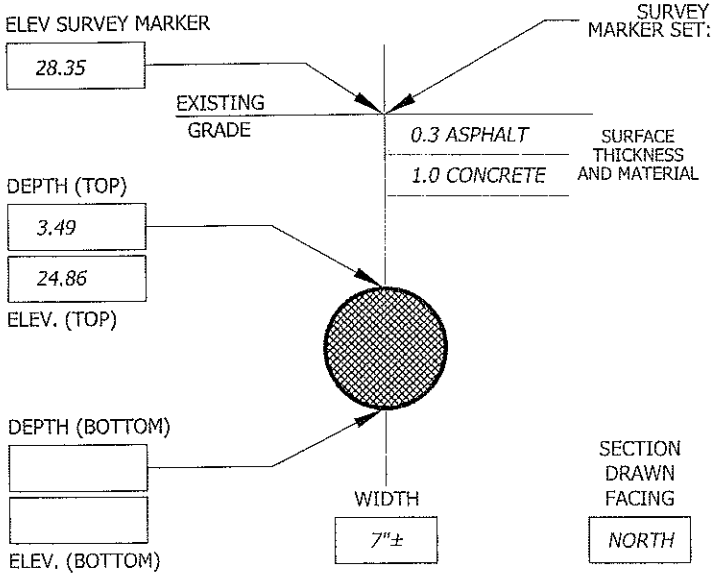

SURVEY MARKER SET: PK NAIL ABOVE: CROWN OF UTILITY MARKING TAPE INSTALLED: BLUE

CONTROL POINTS PROVIDED BY: WHITMAN REQUARDT AND ASSOCIATES, LLP

105	N= -2202.90	E= 4545.83	ELEV= 27.43
106	N= -1748.30	E= 4524.82	ELEV= 32.27

A/I/DATA MARKER:	NORTHING	EASTING	ELEVATION
	-2044.36	4561.60	28.35

NOTES:

TEST HOLE DATA PRODUCED BY:
ACCURATE INFRASTRUCTURE DATA, INC.
1100 BATAVIA FARM ROAD, SUITE 200, BALTIMORE, MD 21237
PH: 410-686-5091 FAX: 410-686-5093
ALL MEASUREMENTS ARE SHOWN IN DECIMAL FEET EXCEPT WHERE NOTED

PLAN VIEW OF TEST HOLE

DIMENSIONS GOVERN; DO NOT SCALE

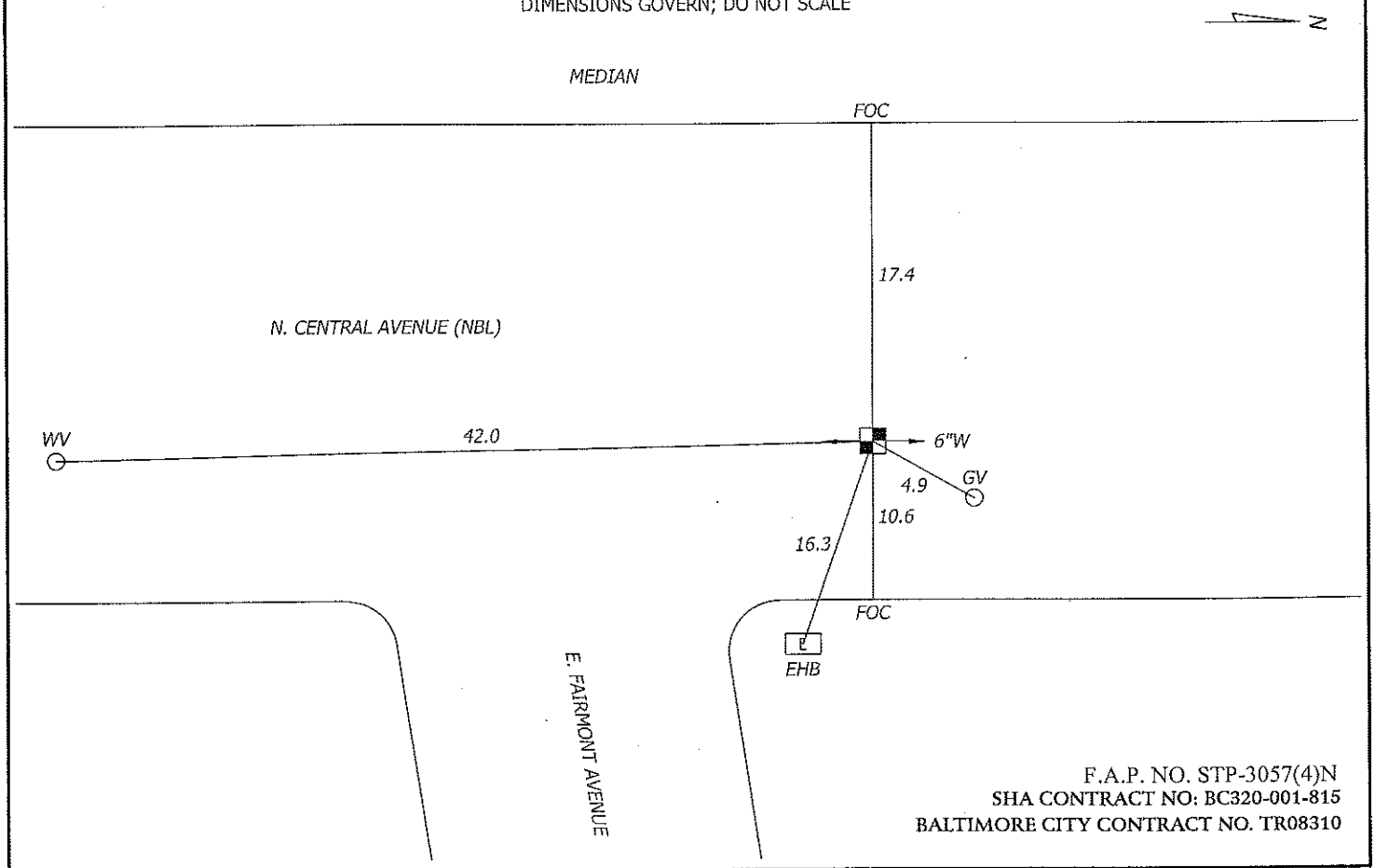

F.A.P. NO. STP-3057(4)N
SHA CONTRACT NO: BC320-001-815
BALTIMORE CITY CONTRACT NO. TR08310

A / I / DATA - TEST HOLE DATA SHEET

JOB #: 09134 TEST HOLE # : B07

PROJECT NAME:	CENTRAL AVENUE	EXCAVATION BY: A/I/DATA	DATE DUG: 12/10/09
PROJECT LOCATION:	BALTIMORE CITY, MARYLAND	FORM BY: MCG ASSISTED BY: KLS	CHECKED BY: SEW
CLIENT NAME:	WHITMAN REQUARDT AND ASSOCIATES, LLP	PAVING CONDITION:	FAIR
UTILITY REQUESTED:	3" GAS	GENERAL SOIL CONDITIONS:	SOFT MOIST SAND ROCKY
UTILITY FOUND:	WRAPPED STEEL GAS (SEE NOTE)	UTILITY CONDITION:	GOOD
		MARKER SURVEYED BY:	A/I/DATA

SECTION VIEW OF TEST HOLE

NOT TO SCALE

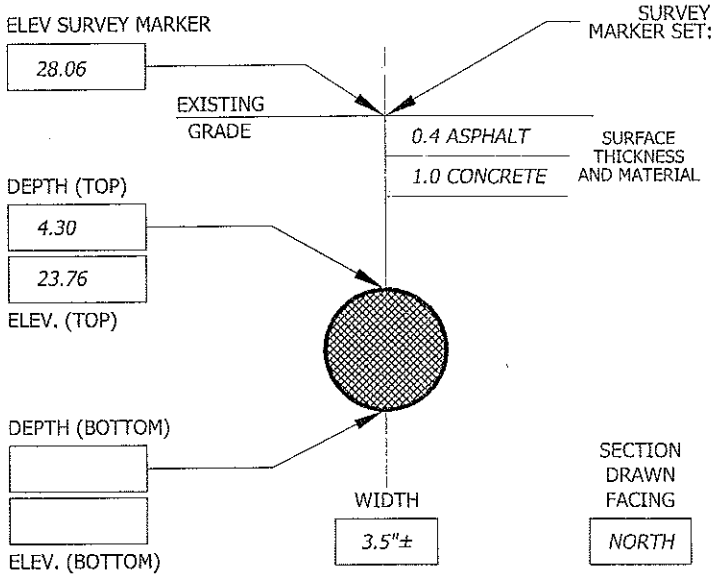

SURVEY MARKER SET: PK NAIL ABOVE: CROWN OF UTILITY MARKING TAPE INSTALLED: YELLOW

CONTROL POINTS PROVIDED BY: WHITMAN REQUARDT AND ASSOCIATES, LLP

105	N= -2202.90	E= 4545.83	ELEV= 27.43
106	N= -1748.30	E= 4524.82	ELEV= 32.27

A/I/DATA MARKER:	NORTHING	EASTING	ELEVATION
	-2045.01	4566.37	28.06

NOTES:
UNABLE TO DETERMINE EXACT SIZE OF UTILITY DUE TO WHITE PLASTIC STUCK ON TOP OF PIPE. MATERIAL APPEARS TO BE WRAPPED STEEL.

TEST HOLE DATA PRODUCED BY:
ACCURATE INFRASTRUCTURE DATA, INC.
1100 BATAVIA FARM ROAD, SUITE 200, BALTIMORE, MD 21237
PH: 410-686-5091 FAX: 410-686-5093
ALL MEASUREMENTS ARE SHOWN IN DECIMAL FEET EXCEPT WHERE NOTED

PLAN VIEW OF TEST HOLE

DIMENSIONS GOVERN; DO NOT SCALE

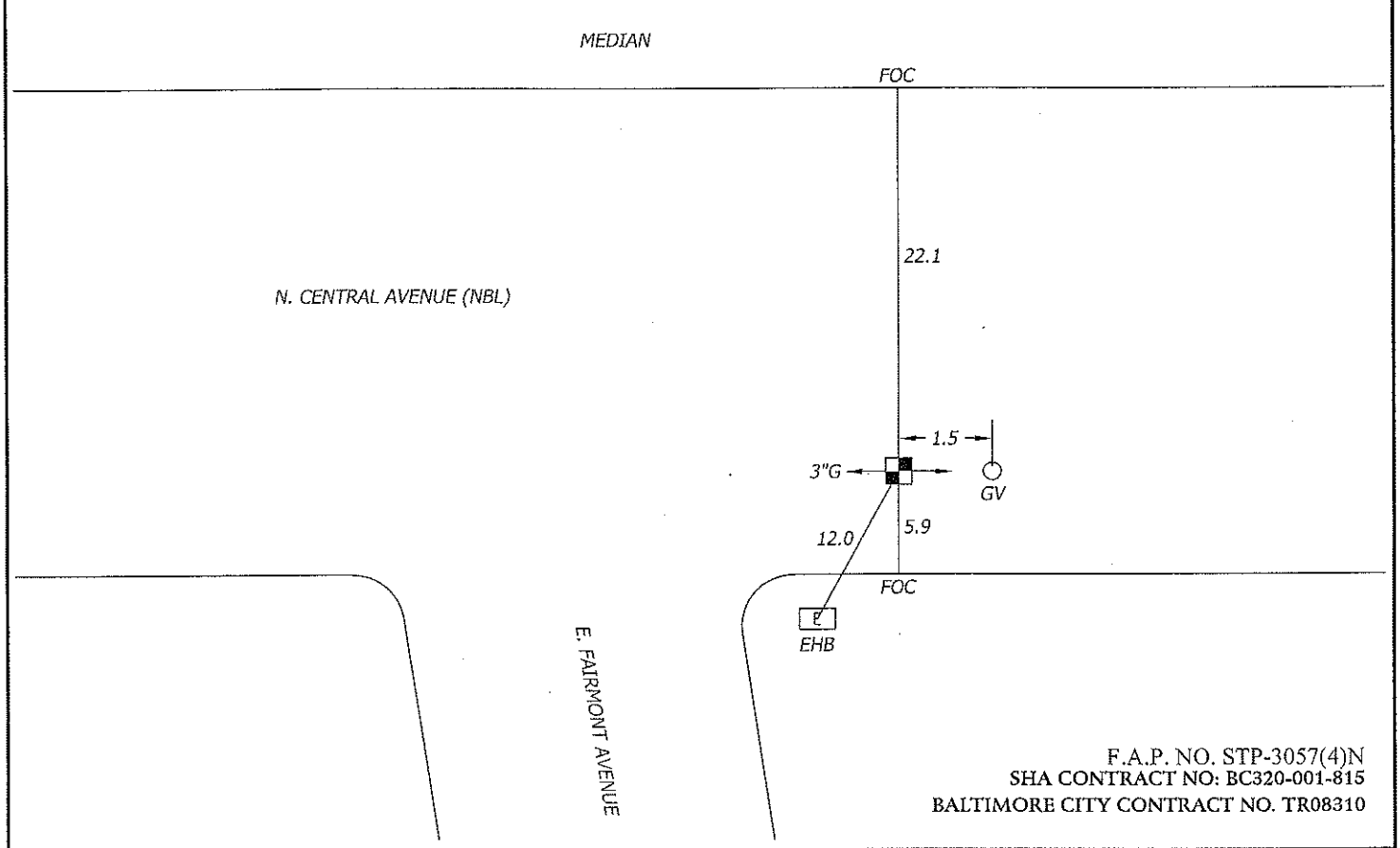

F.A.P. NO. STP-3057(4)N
SHA CONTRACT NO: BC320-001-815
BALTIMORE CITY CONTRACT NO. TR08310

A / I / DATA - TEST HOLE DATA SHEET

JOB #: 09134 TEST HOLE # : B08

PROJECT NAME:	CENTRAL AVENUE	EXCAVATION BY: A/I/DATA	DATE DUG: 12/10/09
PROJECT LOCATION:	BALTIMORE CITY, MARYLAND	FORM BY: MCG ASSISTED BY: KLS	CHECKED BY: SEW
CLIENT NAME:	WHITMAN REQUARDT AND ASSOCIATES, LLP	PAVING CONDITION:	GOOD
UTILITY REQUESTED:	ELECTRIC	GENERAL SOIL CONDITIONS:	HARD MOIST SAND ROCKY
UTILITY FOUND:	CAST IN PLACE CONCRETE ELECTRIC DUCT	UTILITY CONDITION:	GOOD
		MARKER SURVEYED BY:	A/I/DATA

SECTION VIEW OF TEST HOLE

NOT TO SCALE

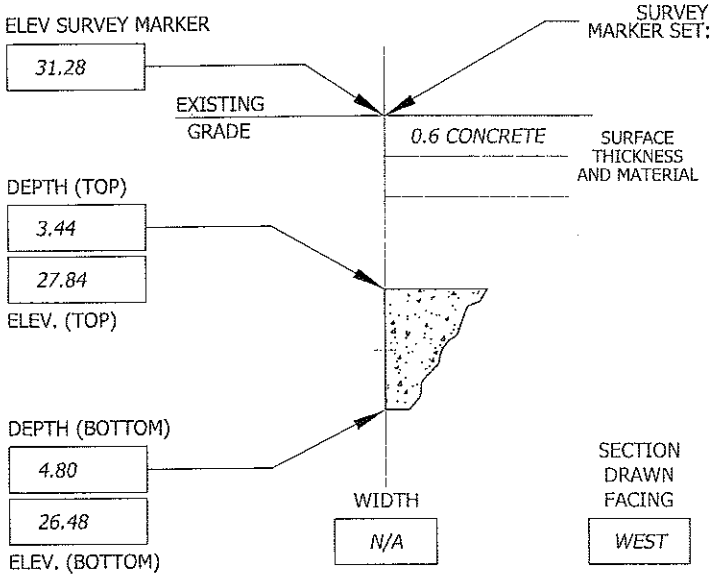

SURVEY MARKER SET: CHIS "X" ABOVE: EDGE OF UTILITY MARKING TAPE INSTALLED: RED

CONTROL POINTS PROVIDED BY: WHITMAN REQUARDT AND ASSOCIATES, LLP

105	N= -2202.90	E= 4545.83	ELEV= 27.43
106	N= -1748.30	E= 4524.82	ELEV= 32.27

A/I/DATA MARKER:	NORTHING	EASTING	ELEVATION
	-1835.85	4576.45	31.28

NOTES:
CHIS "X" SET OVER SOUTH EDGE OF DUCT.

TEST HOLE DATA PRODUCED BY:
ACCURATE INFRASTRUCTURE DATA, INC.
1100 BATAVIA FARM ROAD, SUITE 200, BALTIMORE, MD 21237
PH: 410-686-5091 FAX: 410-686-5093
ALL MEASUREMENTS ARE SHOWN IN DECIMAL FEET EXCEPT WHERE NOTED

PLAN VIEW OF TEST HOLE

DIMENSIONS GOVERN; DO NOT SCALE

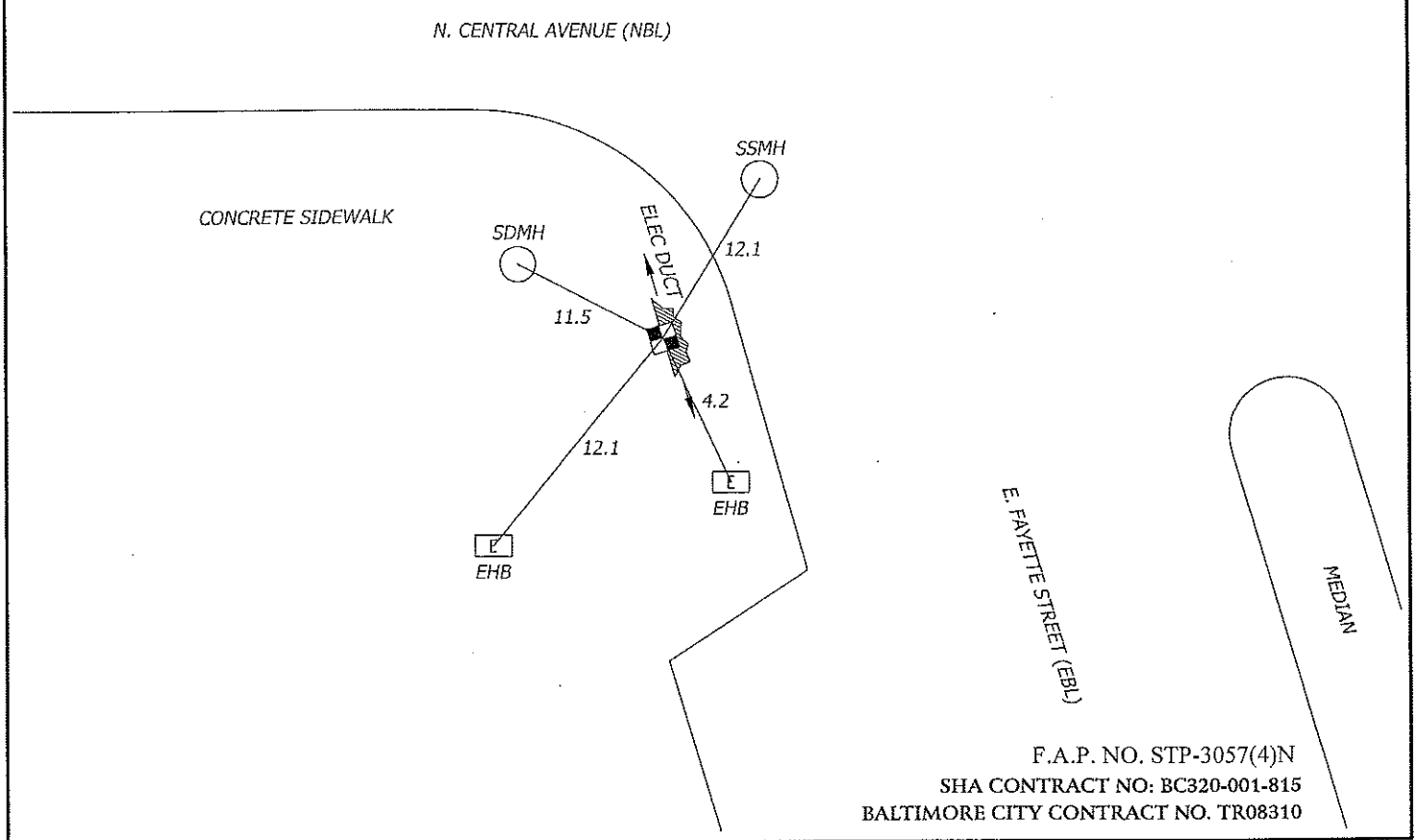

F.A.P. NO. STP-3057(4)N
SHA CONTRACT NO: BC320-001-815
BALTIMORE CITY CONTRACT NO. TR08310

A / I / DATA - TEST HOLE DATA SHEET

JOB #: 09134 TEST HOLE # : B09

PROJECT NAME:	CENTRAL AVENUE	EXCAVATION BY: A/I/DATA	DATE DUG: 12/10/09
PROJECT LOCATION:	BALTIMORE CITY, MARYLAND	FORM BY: MCG ASSISTED BY: KLS	CHECKED BY: SEW
CLIENT NAME:	WHITMAN REQUARDT AND ASSOCIATES, LLP	PAVING CONDITION:	GOOD
UTILITY REQUESTED:	10" WATER	GENERAL SOIL CONDITIONS:	HARD MOIST SAND ROCKY
UTILITY FOUND:	10" CAST IRON WATER	UTILITY CONDITION:	GOOD
		MARKER SURVEYED BY:	A/I/DATA

SECTION VIEW OF TEST HOLE

NOT TO SCALE

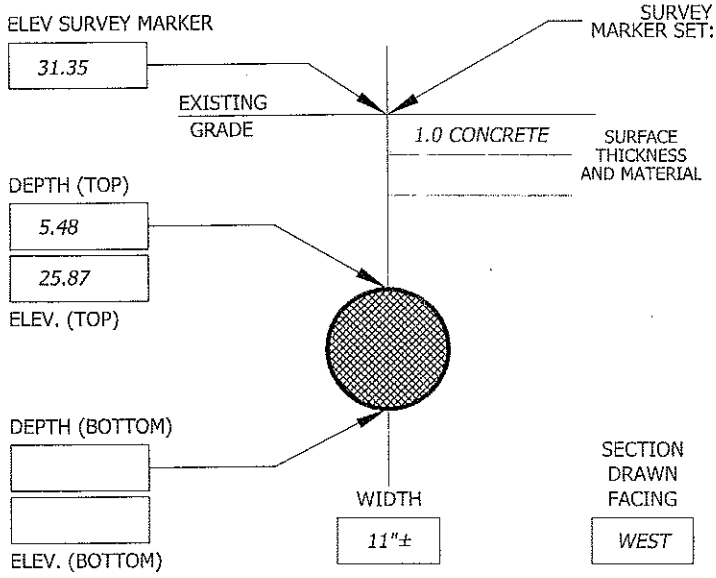

SURVEY MARKER SET: CHIS "X" ABOVE: CROWN OF UTILITY MARKING TAPE INSTALLED: BLUE

CONTROL POINTS PROVIDED BY: WHITMAN REQUARDT AND ASSOCIATES, LLP

105	N= -2202.90	E= 4545.83	ELEV= 27.43
106	N= -1748.30	E= 4524.82	ELEV= 32.27

A/I/DATA MARKER:	NORTHING	EASTING	ELEVATION
	-1839.86	4576.88	31.35

NOTES:

TEST HOLE DATA PRODUCED BY:
ACCURATE INFRASTRUCTURE DATA, INC.
1100 BATAVIA FARM ROAD, SUITE 200, BALTIMORE, MD 21237
PH: 410-686-5091 FAX: 410-686-5093
ALL MEASUREMENTS ARE SHOWN IN DECIMAL FEET EXCEPT WHERE NOTED

PLAN VIEW OF TEST HOLE

DIMENSIONS GOVERN; DO NOT SCALE

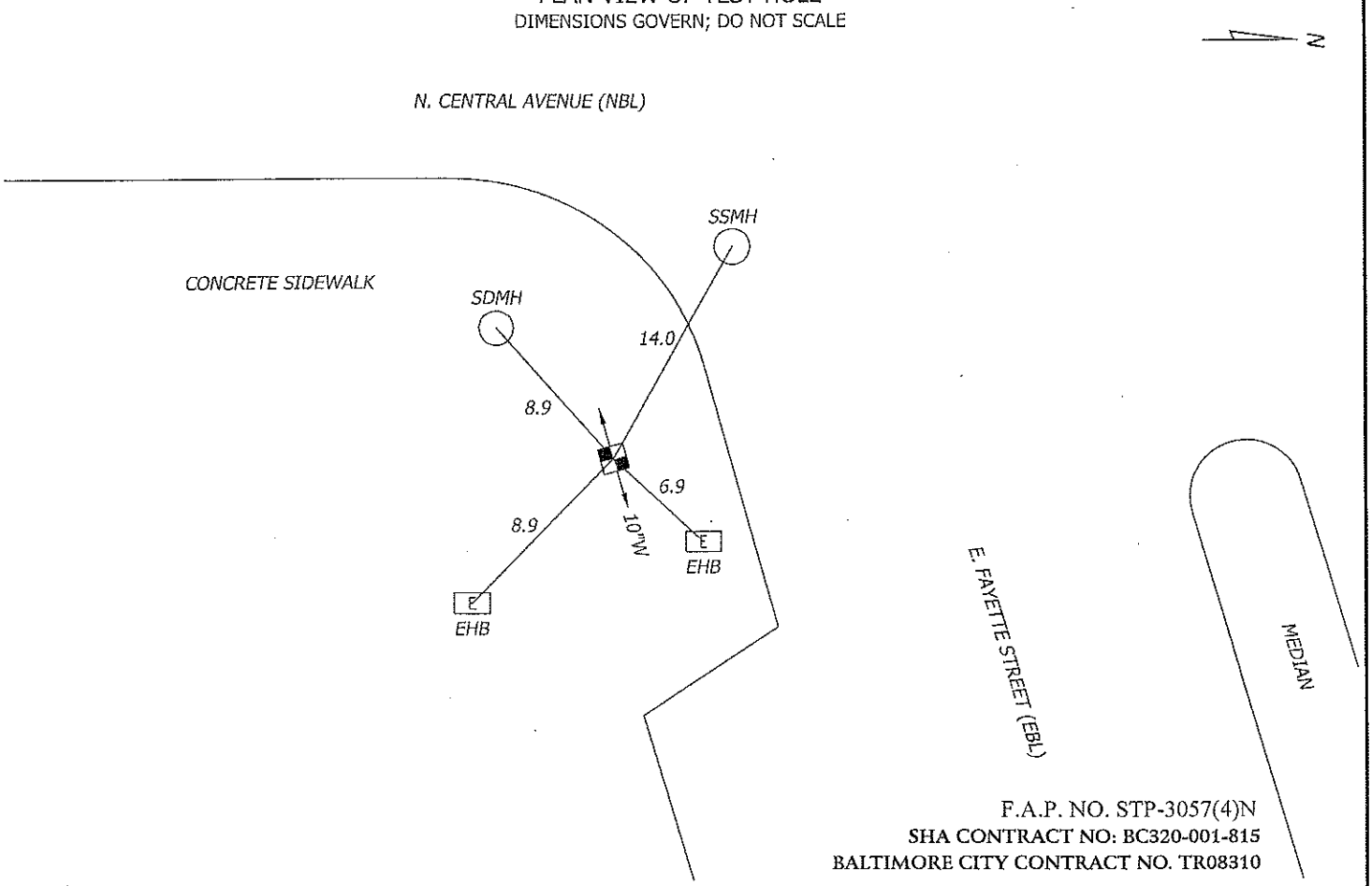

F.A.P. NO. STP-3057(4)N
SHA CONTRACT NO: BC320-001-815
BALTIMORE CITY CONTRACT NO. TR08310

A / I / DATA - TEST HOLE DATA SHEET

JOB #: 09134 TEST HOLE # : B10

PROJECT NAME:	CENTRAL AVENUE	EXCAVATION BY: A/I/DATA	DATE DUG: 12/28/09
PROJECT LOCATION:	BALTIMORE CITY, MARYLAND	FORM BY: RMS ASSISTED BY: MCG, MDI, JPW	CHECKED BY: SEW
CLIENT NAME:	WHITMAN REQUARDT AND ASSOCIATES, LLP	PAVING CONDITION:	GOOD
UTILITY REQUESTED:	6" STORM DRAIN	GENERAL SOIL CONDITIONS:	SOFT DRY ROCKY
UTILITY FOUND:	18" RCP STORM DRAIN (SEE NOTE)	UTILITY CONDITION:	GOOD
		MARKER SURVEYED BY:	A/I/DATA

SECTION VIEW OF TEST HOLE

NOT TO SCALE

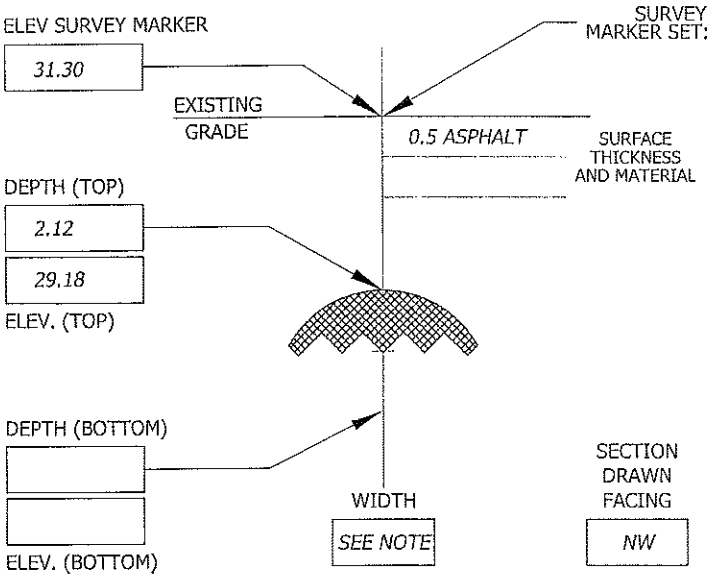

SURVEY MARKER SET: PK NAIL ABOVE: CROWN OF UTILITY MARKING TAPE INSTALLED: GREEN

CONTROL POINTS PROVIDED BY: WHITMAN REQUARDT AND ASSOCIATES, LLP

105	N= -2202.90	E= 4545.83	ELEV= 27.43
106	N= -1748.30	E= 4524.82	ELEV= 32.27

A/I/DATA MARKER:	NORTHING	EASTING	ELEVATION
	-1774.44	4487.69	31.30

NOTES:
UNABLE TO EXPOSE ENTIRE PIPE TO OBTAIN SIZE DUE TO LARGE SIZE OF PIPE AND LIMITED SIZE OF TEST HOLE. NEARBY CORRESPONDING STORM STRUCTURE REVEALED AN 18" PIPE.

TEST HOLE DATA PRODUCED BY:
ACCURATE INFRASTRUCTURE DATA, INC.
1100 BATAVIA FARM ROAD, SUITE 200, BALTIMORE, MD 21237
PH: 410-686-5091 FAX: 410-686-5093
ALL MEASUREMENTS ARE SHOWN IN DECIMAL FEET EXCEPT WHERE NOTED

PLAN VIEW OF TEST HOLE

DIMENSIONS GOVERN; DO NOT SCALE

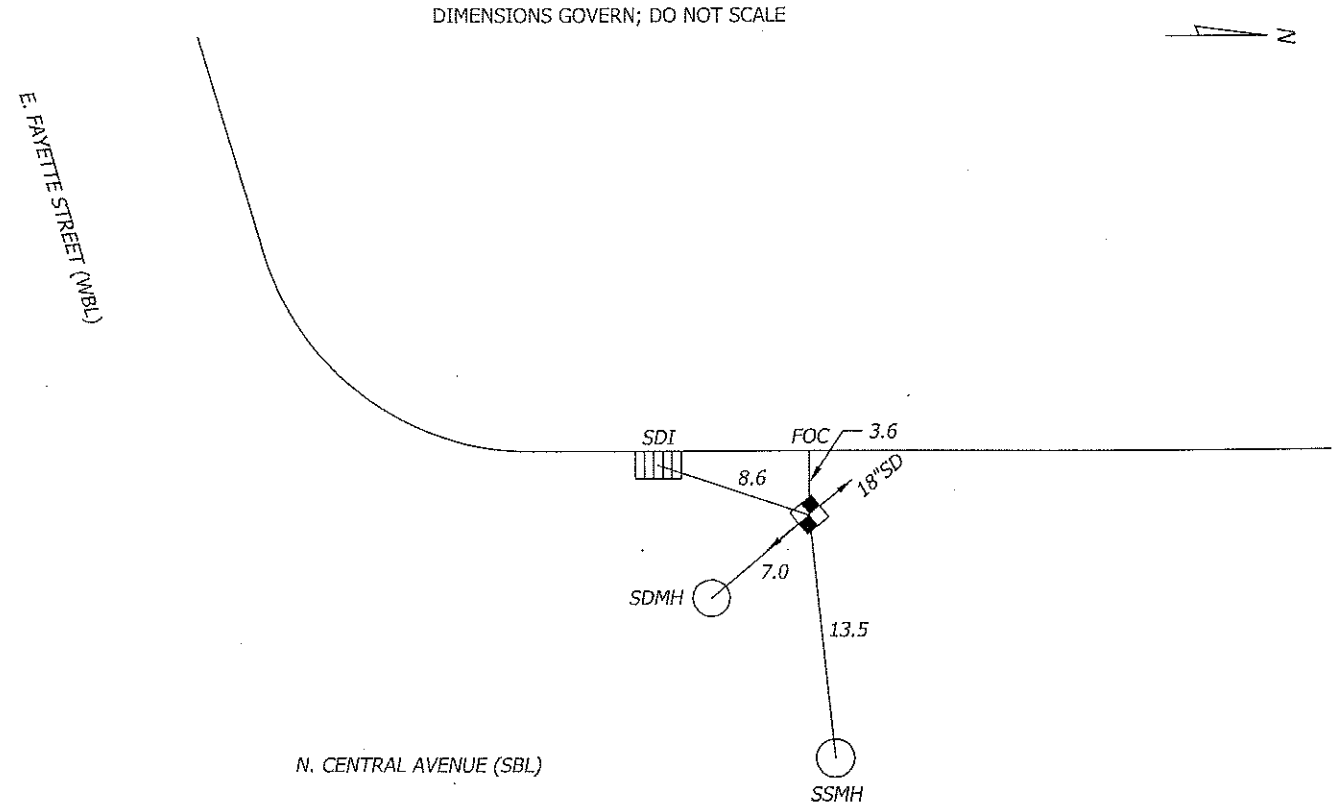

F.A.P. NO. STP-3057(4)N
SHA CONTRACT NO: BC320-001-815
BALTIMORE CITY CONTRACT NO. TR08310

A / I / DATA - TEST HOLE DATA SHEET

JOB #: 09134 TEST HOLE # : B11

PROJECT NAME:	CENTRAL AVENUE	EXCAVATION BY: A/I/DATA	DATE DUG: 12/11/09
PROJECT LOCATION:	BALTIMORE CITY, MARYLAND	FORM BY: MCG ASSISTED BY: KLS, CRB	CHECKED BY: SEW
CLIENT NAME:	WHITMAN REQUARDT AND ASSOCIATES, LLP	PAVING CONDITION:	GOOD
UTILITY REQUESTED:	6" WATER	GENERAL SOIL CONDITIONS:	SOFT MOIST SAND ROCKY
UTILITY FOUND:	6" CAST IRON WATER	UTILITY CONDITION:	FAIR (SEE NOTE)
		MARKER SURVEYED BY:	A/I/DATA

SECTION VIEW OF TEST HOLE

NOT TO SCALE

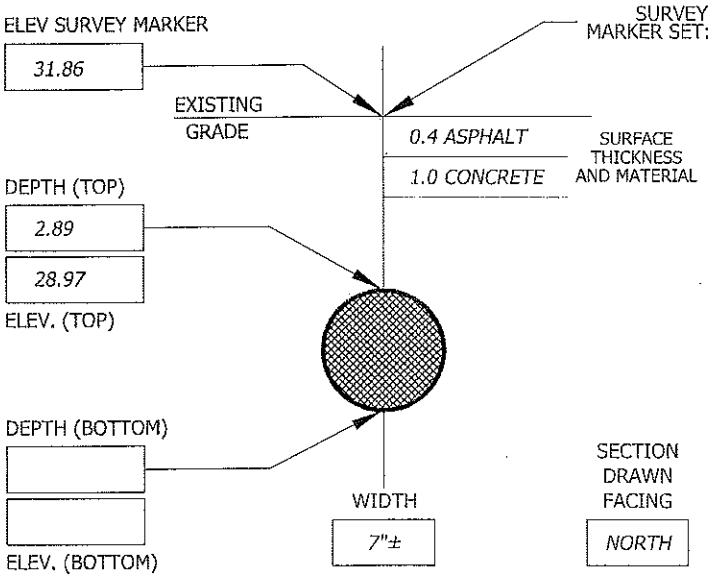

SURVEY MARKER SET: PK NAIL ABOVE: CROWN OF UTILITY MARKING TAPE INSTALLED: BLUE

CONTROL POINTS PROVIDED BY: WHITMAN REQUARDT AND ASSOCIATES, LLP

105	N= -2202.90	E= 4545.83	ELEV= 27.43
106	N= -1748.30	E= 4524.82	ELEV= 32.27

A/I/DATA MARKER:	NORTHING	EASTING	ELEVATION
	-1605.43	4534.14	31.86

NOTES:
SIZE IS APPROXIMATE DUE TO CORROSION ON PIPE.

TEST HOLE DATA PRODUCED BY:
ACCURATE INFRASTRUCTURE DATA, INC.
1100 BATAVIA FARM ROAD, SUITE 200, BALTIMORE, MD 21237
PH: 410-686-5091 FAX: 410-686-5093
ALL MEASUREMENTS ARE SHOWN IN DECIMAL FEET EXCEPT WHERE NOTED

PLAN VIEW OF TEST HOLE

DIMENSIONS GOVERN; DO NOT SCALE

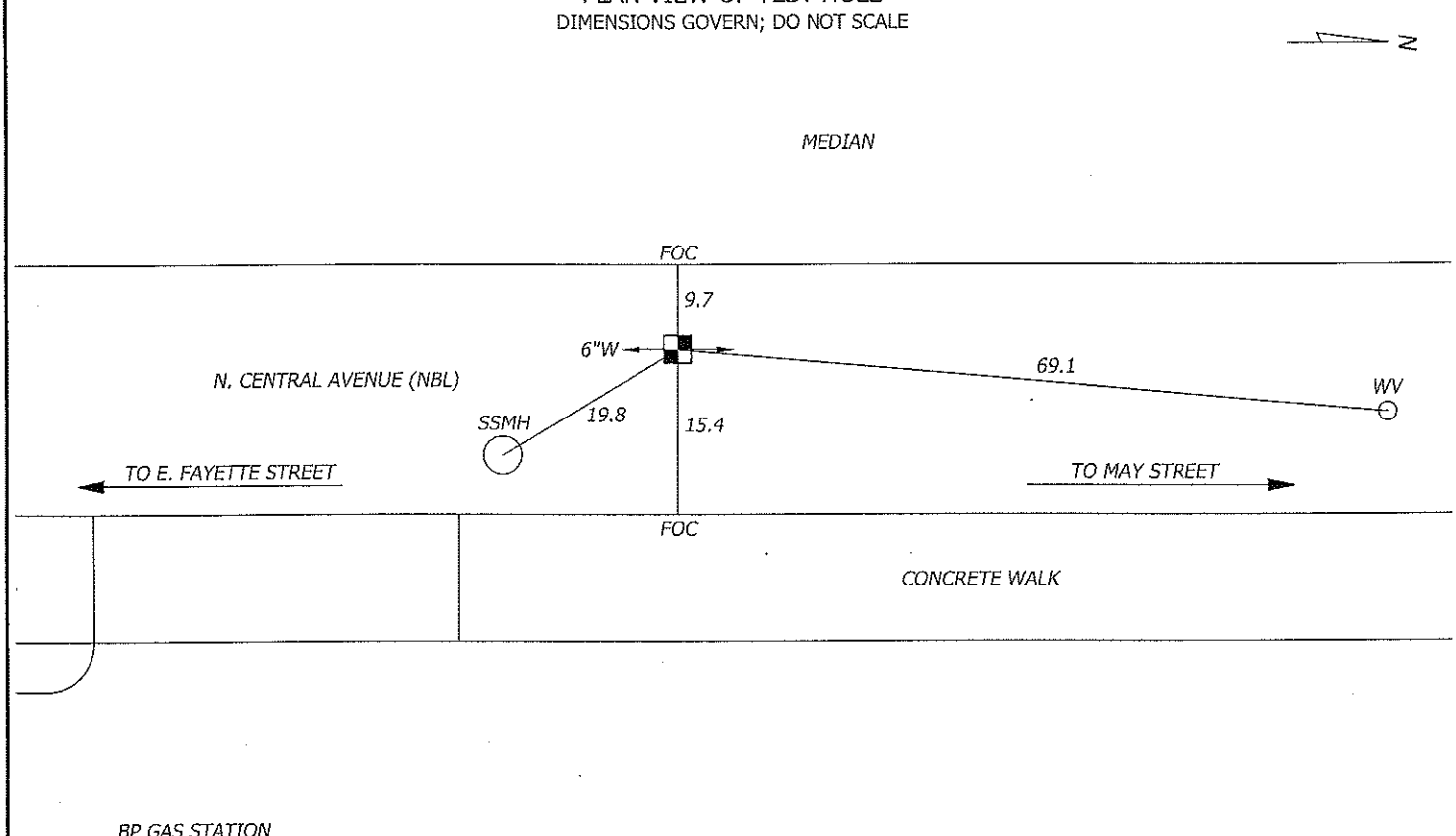

F.A.P. NO. STP-3057(4)N
SHA CONTRACT NO: BC320-001-815
BALTIMORE CITY CONTRACT NO. TR08310

A / I / DATA - TEST HOLE DATA SHEET

JOB #: 09134 TEST HOLE # : B12

PROJECT NAME:	CENTRAL AVENUE	EXCAVATION BY: A/I/DATA	DATE DUG: 12/11/09
PROJECT LOCATION:	BALTIMORE CITY, MARYLAND	FORM BY: MCG ASSISTED BY: KLS, CRB	CHECKED BY: SEW
CLIENT NAME:	WHITMAN REQUARDT AND ASSOCIATES, LLP	PAVING CONDITION:	GOOD
UTILITY REQUESTED:	6" WATER	GENERAL SOIL CONDITIONS:	SOFT MOIST SAND ROCKY
UTILITY FOUND:	6" CAST IRON WATER	UTILITY CONDITION:	GOOD
		MARKER SURVEYED BY:	A/I/DATA

SECTION VIEW OF TEST HOLE

NOT TO SCALE

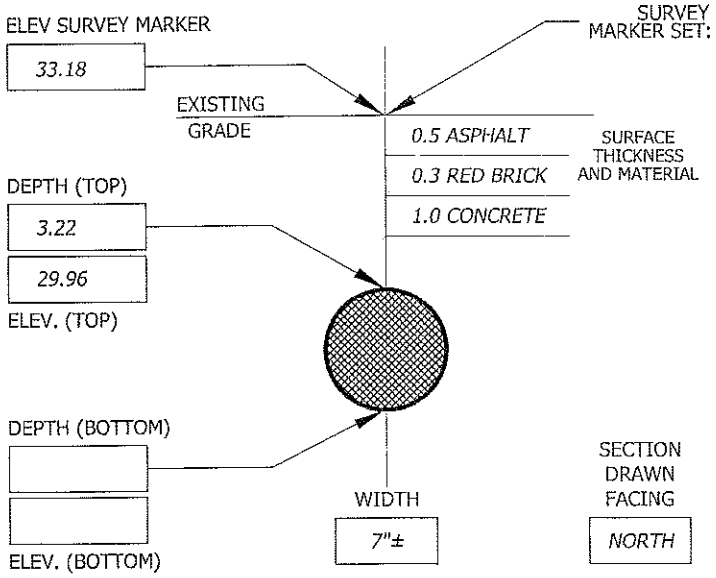

SURVEY MARKER SET: PK NAIL ABOVE: CROWN OF UTILITY MARKING TAPE INSTALLED: BLUE

CONTROL POINTS PROVIDED BY: WHITMAN REQUARDT AND ASSOCIATES, LLP

105	N= -2202.90	E= 4545.83	ELEV= 27.43
106	N= -1748.30	E= 4524.82	ELEV= 32.27

A/I/DATA MARKER:	NORTHING	EASTING	ELEVATION
	-1435.36	4525.12	33.18

NOTES:

TEST HOLE DATA PRODUCED BY:
ACCURATE INFRASTRUCTURE DATA, INC.
1100 BATAVIA FARM ROAD, SUITE 200, BALTIMORE, MD 21237
PH: 410-686-5091 FAX: 410-686-5093
ALL MEASUREMENTS ARE SHOWN IN DECIMAL FEET EXCEPT WHERE NOTED

PLAN VIEW OF TEST HOLE

DIMENSIONS GOVERN; DO NOT SCALE

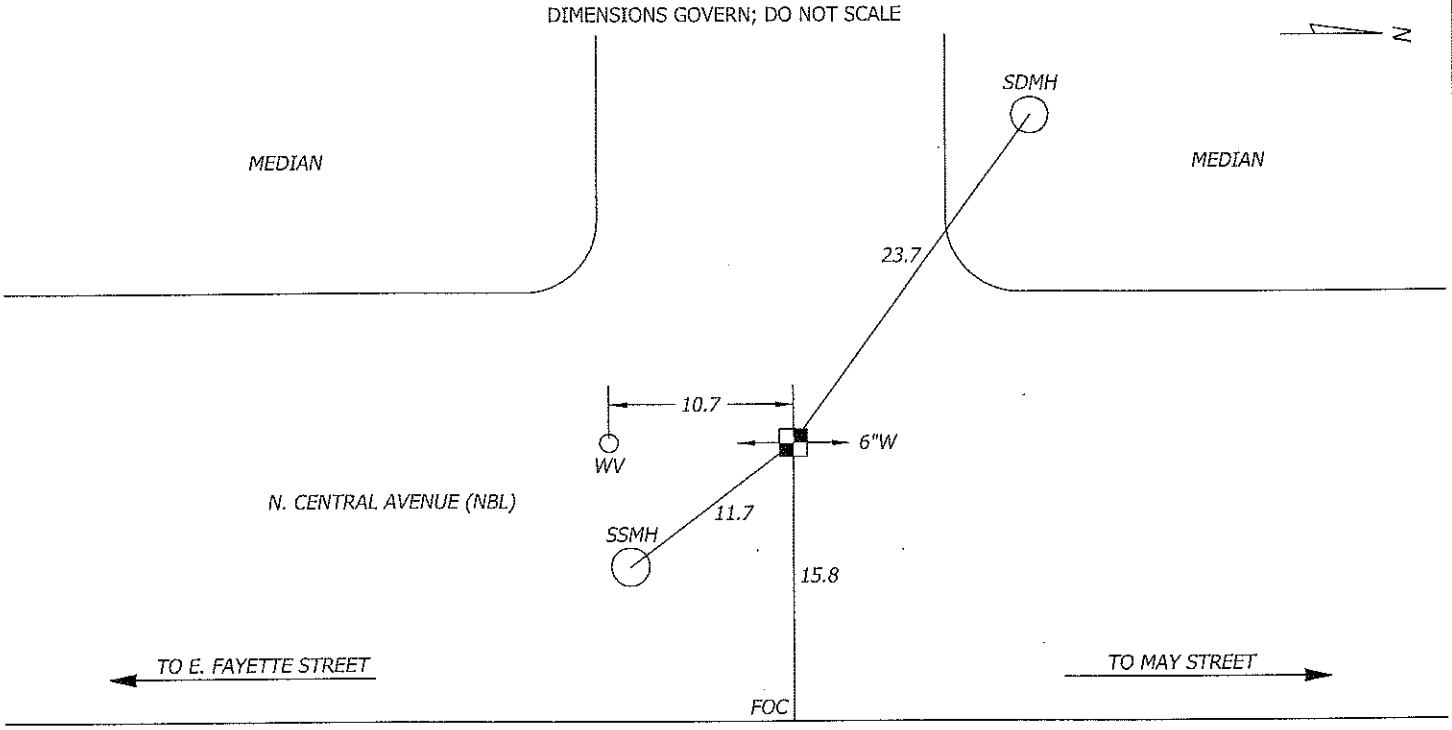

F.A.P. NO. STP-3057(4)N
SHA CONTRACT NO: BC320-001-815
BALTIMORE CITY CONTRACT NO. TR08310

A / I / DATA - TEST HOLE DATA SHEET

JOB #: 09134 TEST HOLE # : B13

PROJECT NAME:	CENTRAL AVENUE	EXCAVATION BY: A/I/DATA	DATE DUG: 12/18/09
PROJECT LOCATION:	BALTIMORE CITY, MARYLAND	FORM BY: RRB ASSISTED BY: TDL, CRB, JMK	CHECKED BY: SEW
CLIENT NAME:	WHITMAN REQUARDT AND ASSOCIATES, LLP	PAVING CONDITION:	FAIR
UTILITY REQUESTED:	8" STORM DRAIN	GENERAL SOIL CONDITIONS:	SOFT MOIST CLAY ROCKY
UTILITY FOUND:	NO UTILITY FOUND	UTILITY CONDITION:	N/A
		MARKER SURVEYED BY:	A/I/DATA

SECTION VIEW OF TEST HOLE
NOT TO SCALE

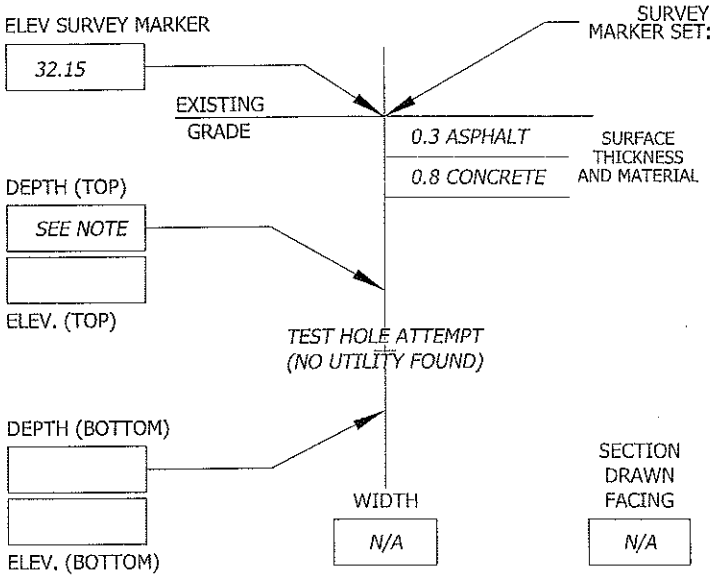

SURVEY MARKER SET: SEE NOTE ABOVE: N/A OF UTILITY MARKING TAPE INSTALLED: N/A

CONTROL POINTS PROVIDED BY: WHITMAN REQUARDT AND ASSOCIATES, LLP

105	N= -2202.90	E= 4545.83	ELEV= 27.43
106	N= -1748.30	E= 4524.82	ELEV= 32.27

A/I/DATA MARKER:	NORTHING	EASTING	ELEVATION
	-1424.34	4467.07	32.15

NOTES:
TEST HOLE PERFORMED AT REQUESTED LOCATION TO A DEPTH OF 6'±. STORM DRAIN BELIEVED TO BE DEEPER THAN 6'. NO UTILITY FOUND. NO SURVEY MARKER SET. ALL TIES AND SURVEY TAKEN TO CENTER OF HOLE.

TEST HOLE DATA PRODUCED BY:
ACCURATE INFRASTRUCTURE DATA, INC.
1100 BATAVIA FARM ROAD, SUITE 200, BALTIMORE, MD 21237
PH: 410-686-5091 FAX: 410-686-5093
ALL MEASUREMENTS ARE SHOWN IN DECIMAL FEET EXCEPT WHERE NOTED

PLAN VIEW OF TEST HOLE
DIMENSIONS GOVERN; DO NOT SCALE

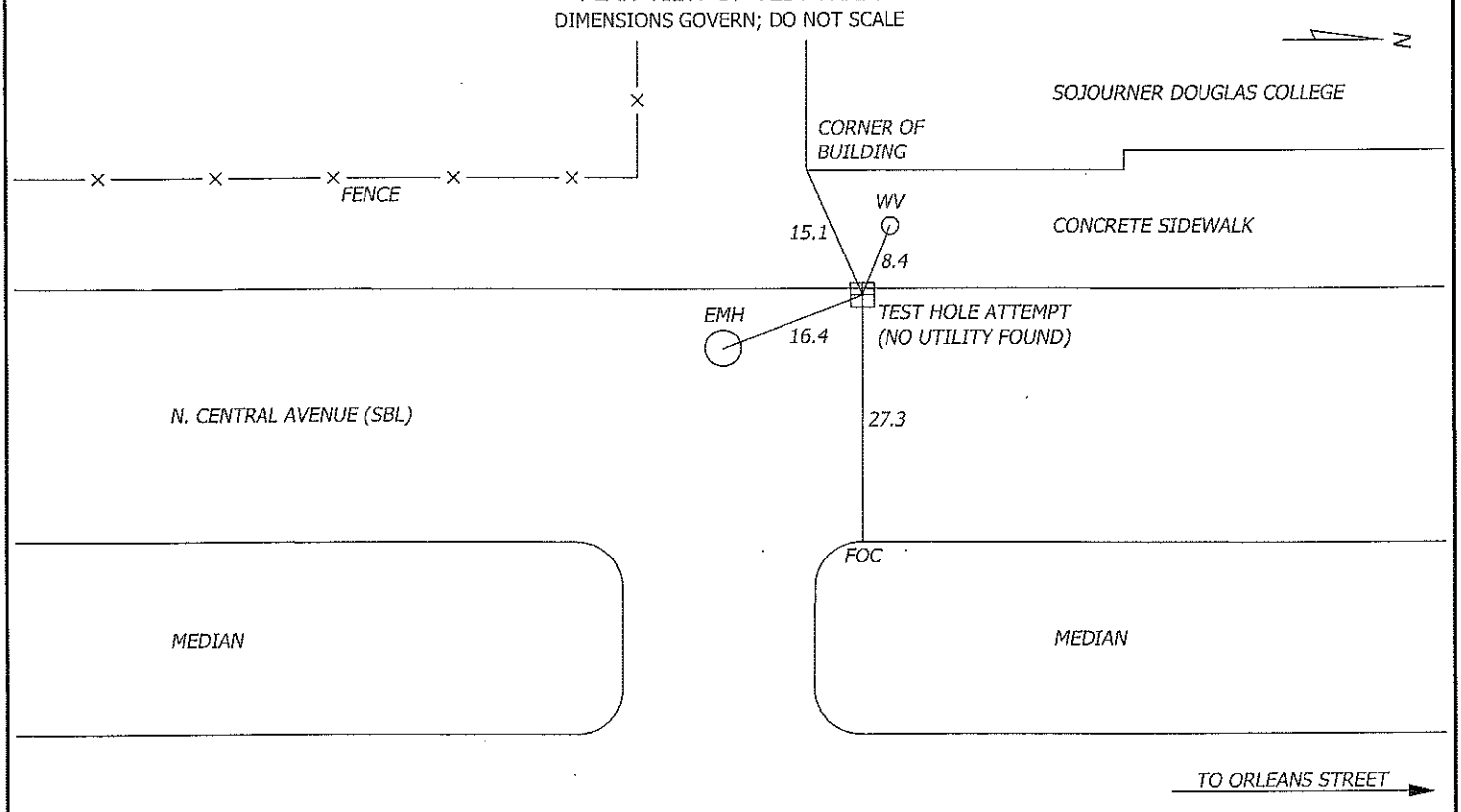

F.A.P. NO. STP-3057(4)N
SHA CONTRACT NO: BC320-001-815
BALTIMORE CITY CONTRACT NO. TR08310

A / I / DATA - TEST HOLE DATA SHEET

JOB #: 09134 TEST HOLE # : B13A

PROJECT NAME:	CENTRAL AVENUE	EXCAVATION BY: A/I/DATA	DATE DUG: 01/05/10
PROJECT LOCATION:	BALTIMORE CITY, MARYLAND	FORM BY: RRB ASSISTED BY: JMK, JPW	CHECKED BY: SEW
CLIENT NAME:	WHITMAN REQUARDT AND ASSOCIATES, LLP	PAVING CONDITION:	FAIR
UTILITY REQUESTED:	8" STORM DRAIN	GENERAL SOIL CONDITIONS:	SOFT MOIST CLAY ROCKY
UTILITY FOUND:	NO UTILITY FOUND	UTILITY CONDITION:	N/A
		MARKER SURVEYED BY:	A/I/DATA

SECTION VIEW OF TEST HOLE

NOT TO SCALE

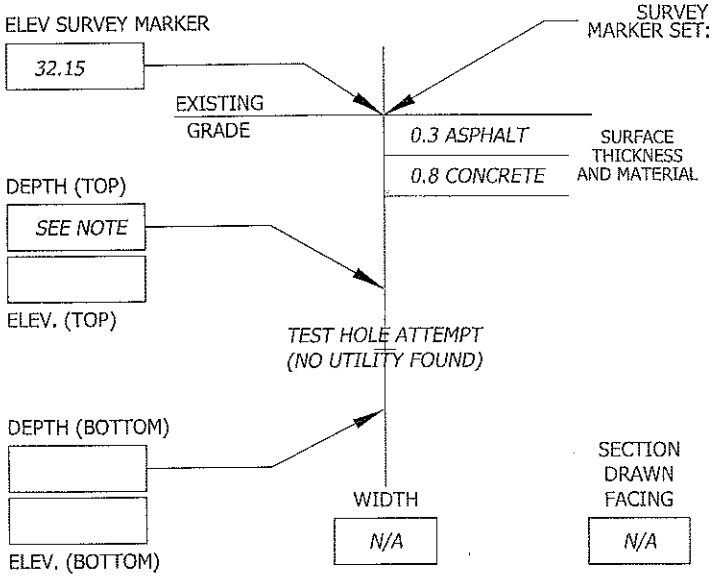

SURVEY MARKER SET: SEE NOTE ABOVE: N/A OF UTILITY MARKING TAPE INSTALLED: N/A

CONTROL POINTS PROVIDED BY: WHITMAN REQUARDT AND ASSOCIATES, LLP

105	N= -2202.90	E= 4545.83	ELEV= 27.43
106	N= -1748.30	E= 4524.82	ELEV= 32.27

A/I/DATA MARKER:	NORTHING	EASTING	ELEVATION
	-1424.34	4467.07	32.15

NOTES:
TEST HOLE PERFORMED AT REQUESTED LOCATION TO A DEPTH OF 7'± AND ENCOUNTERED A LARGE ROCK. UNABLE TO CONTINUE EXCAVATION. ABLE TO PROBE TO 9'±. NO UTILITY FOUND. NO SURVEY MARKER SET. ALL TIES AND SURVEY TAKEN TO CENTER OF HOLE.

TEST HOLE DATA PRODUCED BY:
ACCURATE INFRASTRUCTURE DATA, INC.
1100 BATAVIA FARM ROAD, SUITE 200, BALTIMORE, MD 21237
PH: 410-686-5091 FAX: 410-686-5093

ALL MEASUREMENTS ARE SHOWN IN DECIMAL FEET EXCEPT WHERE NOTED

PLAN VIEW OF TEST HOLE

DIMENSIONS GOVERN; DO NOT SCALE

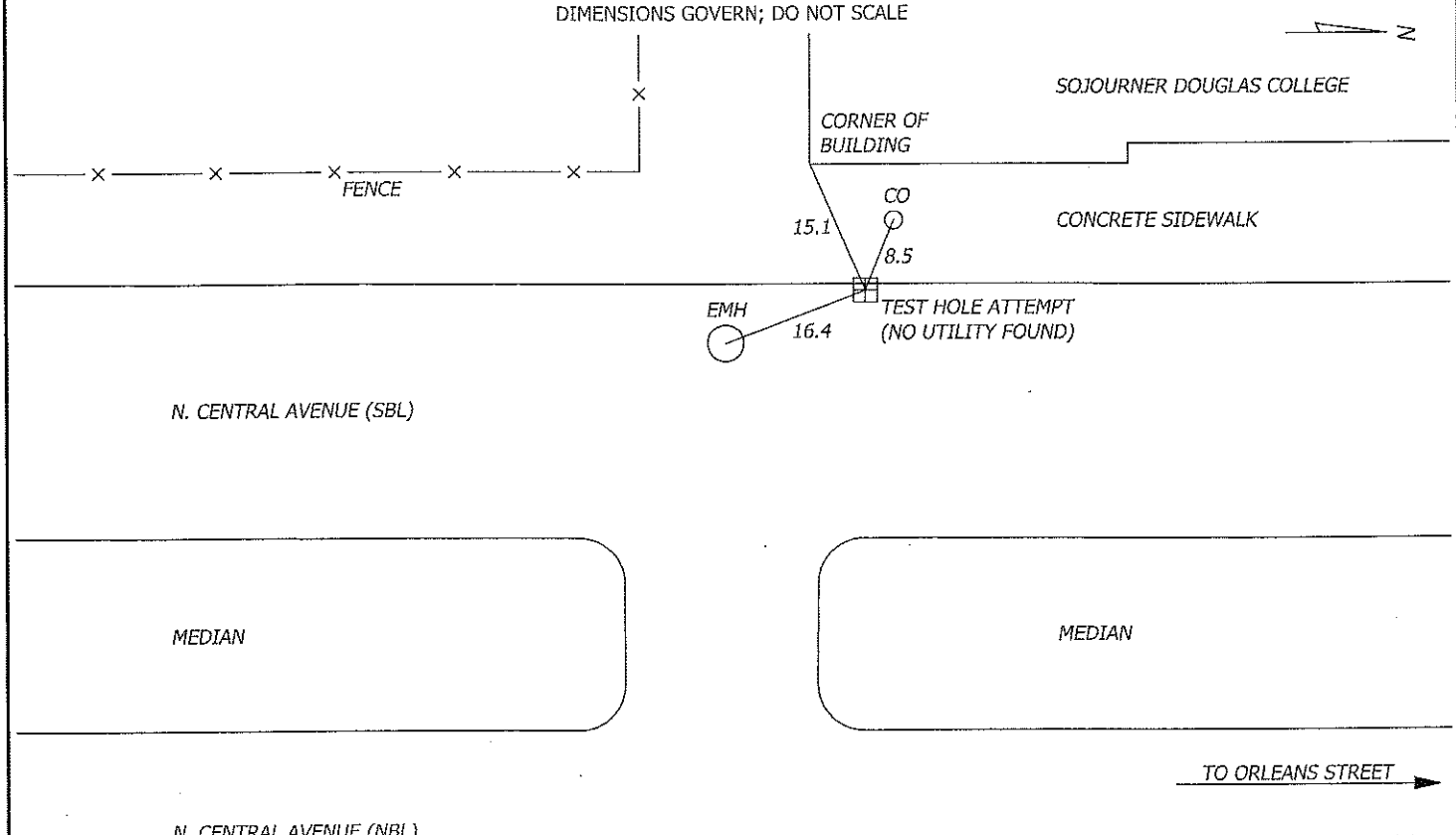

F.A.P. NO. STP-3057(4)N
SHA CONTRACT NO: BC320-001-815
BALTIMORE CITY CONTRACT NO. TR08310

A / I / DATA - TEST HOLE DATA SHEET

JOB #: 09134 TEST HOLE # : B14

PROJECT NAME:	CENTRAL AVENUE	EXCAVATION BY: A/I/DATA	DATE DUG: 12/18/09
PROJECT LOCATION:	BALTIMORE CITY, MARYLAND	FORM BY: RRB ASSISTED BY: TDL, CRB, JMK	CHECKED BY: SEW
CLIENT NAME:	WHITMAN REQUARDT AND ASSOCIATES, LLP	PAVING CONDITION:	FAIR
UTILITY REQUESTED:	ELECTRIC	GENERAL SOIL CONDITIONS:	SOFT MOIST SAND CLAY ROCKY
UTILITY FOUND:	CAST IN PLACE CONCRETE ELECTRIC DUCT	UTILITY CONDITION:	GOOD
		MARKER SURVEYED BY:	A/I/DATA

SECTION VIEW OF TEST HOLE

NOT TO SCALE

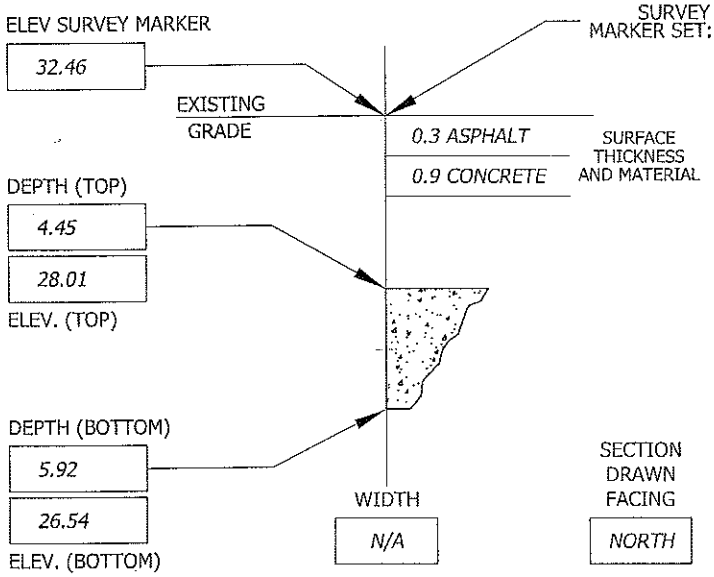

SURVEY MARKER SET: PK NAIL ABOVE: EDGE OF UTILITY MARKING TAPE INSTALLED: RED

CONTROL POINTS PROVIDED BY: WHITMAN REQUARDT AND ASSOCIATES, LLP

105	N= -2202.90	E= 4545.83	ELEV= 27.43
106	N= -1748.30	E= 4524.82	ELEV= 32.27

A/I/DATA MARKER:	NORTHING	EASTING	ELEVATION
	-1422.86	4470.33	32.46

NOTES:
PK NAIL SET OVER WEST EDGE OF DUCT.

TEST HOLE DATA PRODUCED BY:
ACCURATE INFRASTRUCTURE DATA, INC.
1100 BATAVIA FARM ROAD, SUITE 200, BALTIMORE, MD 21237
PH: 410-686-5091 FAX: 410-686-5093
ALL MEASUREMENTS ARE SHOWN IN DECIMAL FEET EXCEPT WHERE NOTED

PLAN VIEW OF TEST HOLE

DIMENSIONS GOVERN; DO NOT SCALE

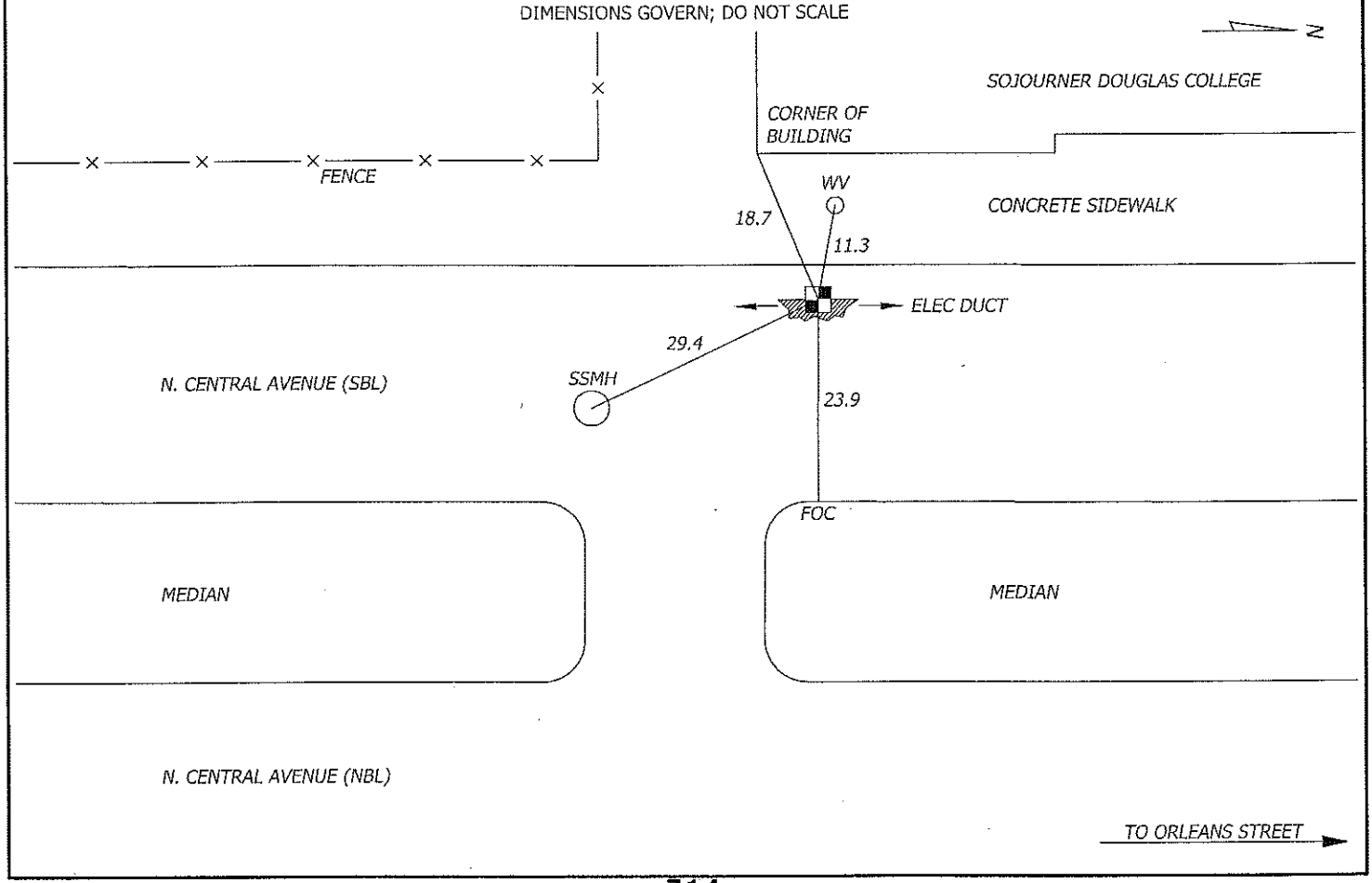

A / I / DATA - TEST HOLE DATA SHEET

JOB #: 09134 TEST HOLE # : B15

PROJECT NAME:	CENTRAL AVENUE	EXCAVATION BY: A/I/DATA	DATE DUG: 12/13/09
PROJECT LOCATION:	BALTIMORE CITY, MARYLAND	FORM BY: TDM ASSISTED BY: MCG, JMK	CHECKED BY: SEW
CLIENT NAME:	WHITMAN REQUARDT AND ASSOCIATES, LLP	PAVING CONDITION:	GOOD
UTILITY REQUESTED:	16" WATER	GENERAL SOIL CONDITIONS:	HARD DRY CLAY ROCKY
UTILITY FOUND:	16" CAST IRON WATER	UTILITY CONDITION:	GOOD
		MARKER SURVEYED BY:	A/I/DATA

SECTION VIEW OF TEST HOLE

NOT TO SCALE

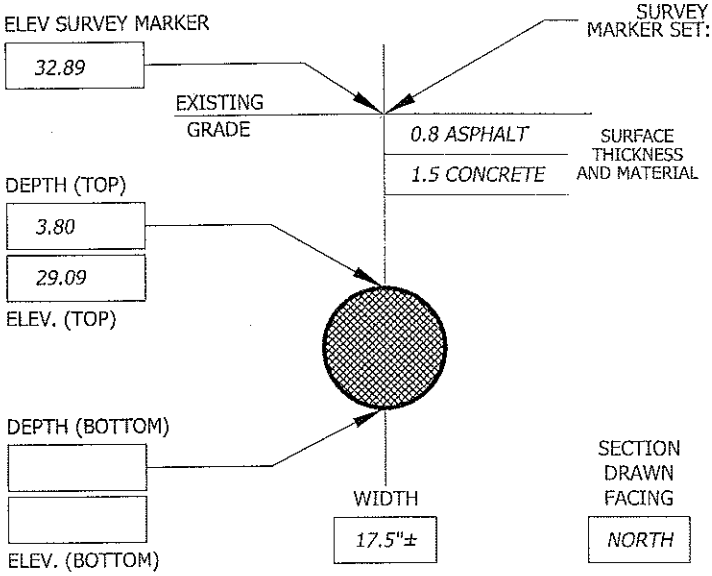

SURVEY MARKER SET: PK NAIL ABOVE: CROWN OF UTILITY MARKING TAPE INSTALLED: BLUE

CONTROL POINTS PROVIDED BY: WHITMAN REQUARDT AND ASSOCIATES, LLP

105	N= -2202.90	E= 4545.83	ELEV= 27.43
106	N= -1748.30	E= 4524.82	ELEV= 32.27

A/I/DATA MARKER:	NORTHING	EASTING	ELEVATION
	-1426.27	4478.97	32.89

NOTES:

TEST HOLE DATA PRODUCED BY:
ACCURATE INFRASTRUCTURE DATA, INC.
1100 BATAVIA FARM ROAD, SUITE 200, BALTIMORE, MD 21237
PH: 410-686-5091 FAX: 410-686-5093
ALL MEASUREMENTS ARE SHOWN IN DECIMAL FEET EXCEPT WHERE NOTED

PLAN VIEW OF TEST HOLE

DIMENSIONS GOVERN; DO NOT SCALE

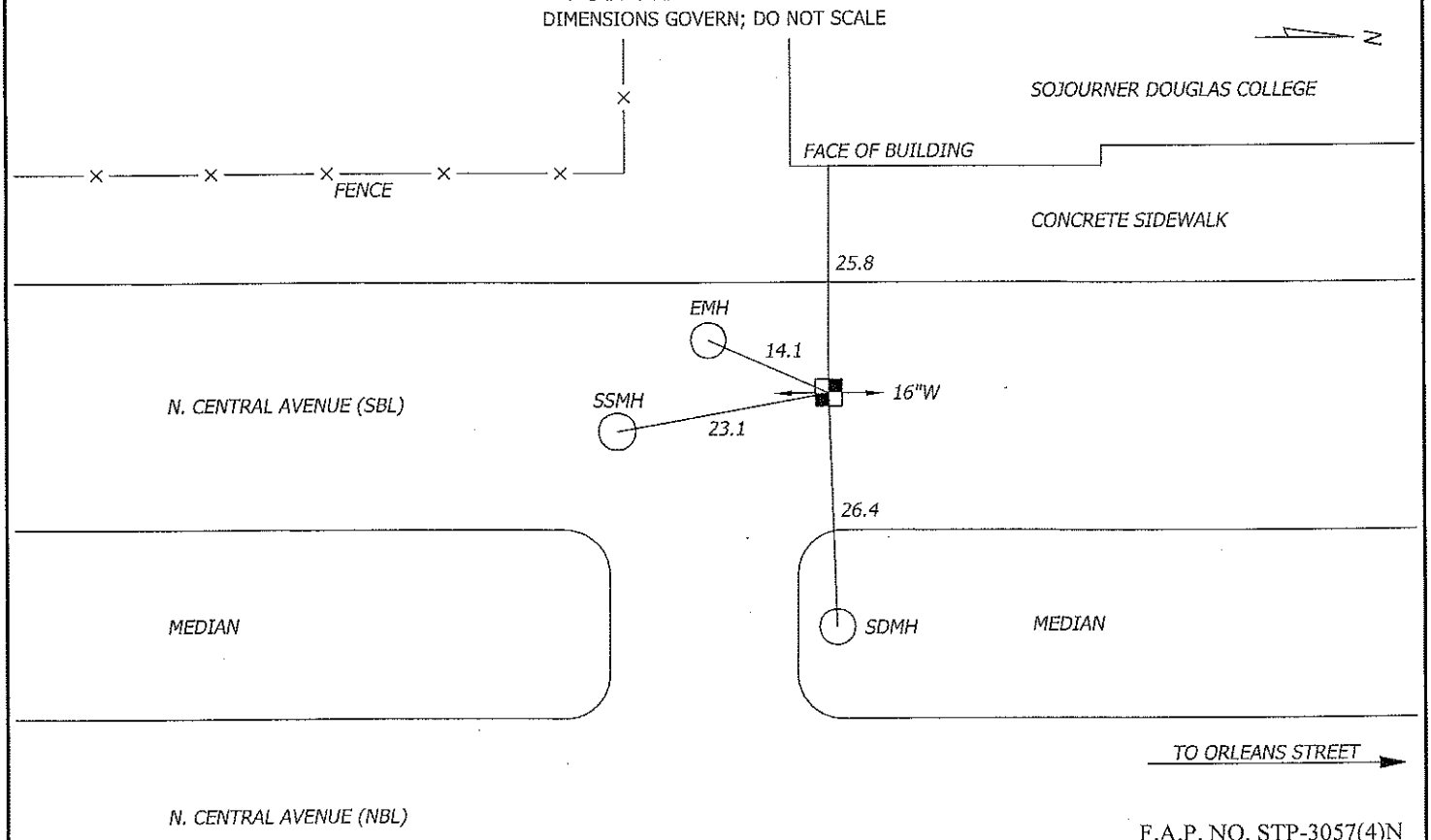

F.A.P. NO. STP-3057(4)N
SHA CONTRACT NO: BC320-001-815
BALTIMORE CITY CONTRACT NO. TR08310

A / I / DATA - TEST HOLE DATA SHEET

JOB #: 09134 TEST HOLE # : B16

PROJECT NAME:	CENTRAL AVENUE	EXCAVATION BY: A/I/DATA	DATE DUG: 12/14/09
PROJECT LOCATION:	BALTIMORE CITY, MARYLAND	FORM BY: MCG ASSISTED BY: TDM, JMK	CHECKED BY: SEW
CLIENT NAME:	WHITMAN REQUARDT AND ASSOCIATES, LLP	PAVING CONDITION:	FAIR
UTILITY REQUESTED:	TELEPHONE	GENERAL SOIL CONDITIONS:	SOFT MOIST CLAY ROCKY
UTILITY FOUND:	CAST IN PLACE CONCRETE ELECTRIC DUCT	UTILITY CONDITION:	GOOD
		MARKER SURVEYED BY:	A/I/DATA

SECTION VIEW OF TEST HOLE

NOT TO SCALE

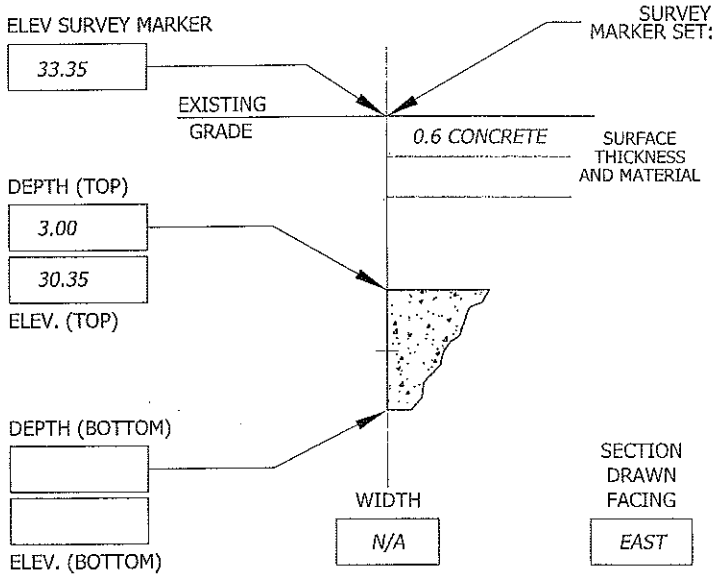

SURVEY MARKER SET: HUB & TACK ABOVE: EDGE OF UTILITY MARKING TAPE INSTALLED: RED

CONTROL POINTS PROVIDED BY: WHITMAN REQUARDT AND ASSOCIATES, LLP

105	N= -2202.90	E= 4545.83	ELEV= 27.43
106	N= -1748.30	E= 4524.82	ELEV= 32.27

A/I/DATA MARKER:	NORTHING	EASTING	ELEVATION
	-1319.79	4551.36	33.35

NOTES:
TEST HOLE REQUESTED ON A COMMUNICATION AT THIS LOCATION. TEST HOLE REVEALED A CAST IN PLACE CONCRETE ELECTRIC DUCT. BOTTOM OF DUCT NOT REQUESTED BY CLIENT. HUB & TACK SET OVER NORTH EDGE OF DUCT.

TEST HOLE DATA PRODUCED BY:
ACCURATE INFRASTRUCTURE DATA, INC.
1100 BATAVIA FARM ROAD, SUITE 200, BALTIMORE, MD 21237
PH: 410-686-5091 FAX: 410-686-5093
ALL MEASUREMENTS ARE SHOWN IN DECIMAL FEET EXCEPT WHERE NOTED

PLAN VIEW OF TEST HOLE

DIMENSIONS GOVERN; DO NOT SCALE

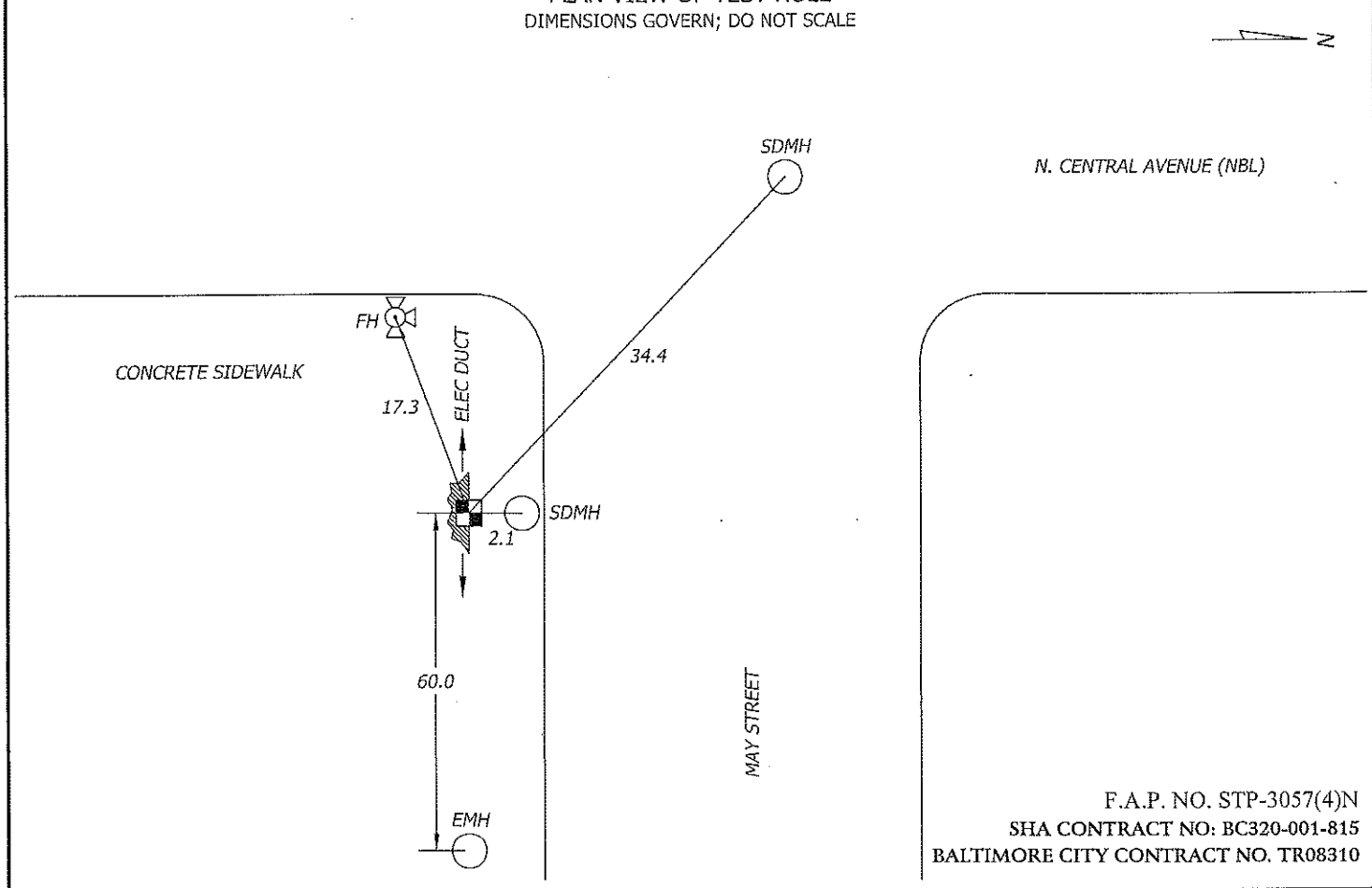

F.A.P. NO. STP-3057(4)N
SHA CONTRACT NO: BC320-001-815
BALTIMORE CITY CONTRACT NO. TR08310

A / I / DATA - TEST HOLE DATA SHEET

JOB #: 09134 TEST HOLE # : B17

PROJECT NAME:	CENTRAL AVENUE	EXCAVATION BY: A/I/DATA	DATE DUG: 12/15/09
PROJECT LOCATION:	BALTIMORE CITY, MARYLAND	FORM BY: TDM ASSISTED BY: MCG, JMK	CHECKED BY: SEW
CLIENT NAME:	WHITMAN REQUARDT AND ASSOCIATES, LLP	PAVING CONDITION:	GOOD
UTILITY REQUESTED:	6" STEAM SUPPLY & 3" STEAM RETURN	GENERAL SOIL CONDITIONS:	SOFT MOIST CLAY ROCKY
UTILITY FOUND:	10"(OD) & 5"(OD) WRAPPED STEEL CASING PIPES	UTILITY CONDITION:	GOOD
		MARKER SURVEYED BY:	A/I/DATA

SECTION VIEW OF TEST HOLE

NOT TO SCALE

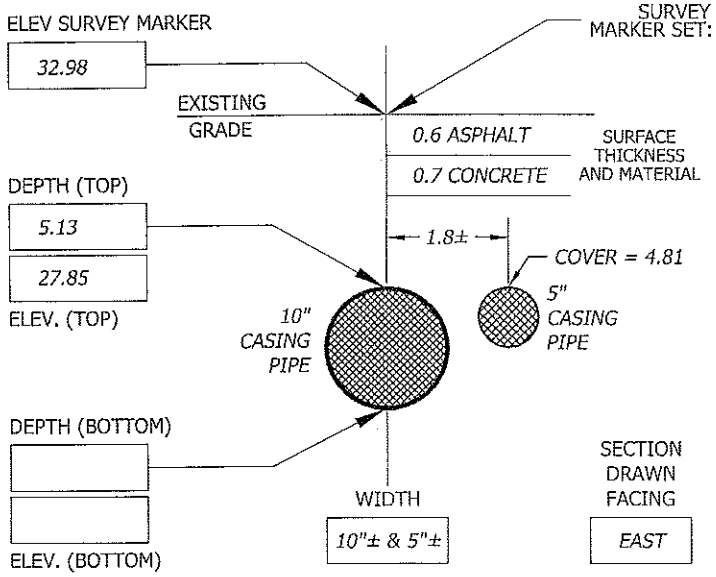

SURVEY MARKER SET: PK NAIL ABOVE: CROWN OF UTILITY MARKING TAPE INSTALLED: YELLOW

CONTROL POINTS PROVIDED BY: WHITMAN REQUARDT AND ASSOCIATES, LLP

105	N= -2202.90	E= 4545.83	ELEV= 27.43
106	N= -1748.30	E= 4524.82	ELEV= 32.27

A/I/DATA MARKER:	NORTHING	EASTING	ELEVATION
	-1313.40	4553.76	32.98

NOTES:
TEST HOLE REVEALED TWO CASING (10" & 5") PIPES. PK NAIL SET OVER CROWN OF 10" ENCASEMENT PIPE.

TEST HOLE DATA PRODUCED BY:
ACCURATE INFRASTRUCTURE DATA, INC.
1100 BATAVIA FARM ROAD, SUITE 200, BALTIMORE, MD 21237
PH: 410-686-5091 FAX: 410-686-5093
ALL MEASUREMENTS ARE SHOWN IN DECIMAL FEET EXCEPT WHERE NOTED

PLAN VIEW OF TEST HOLE

DIMENSIONS GOVERN; DO NOT SCALE

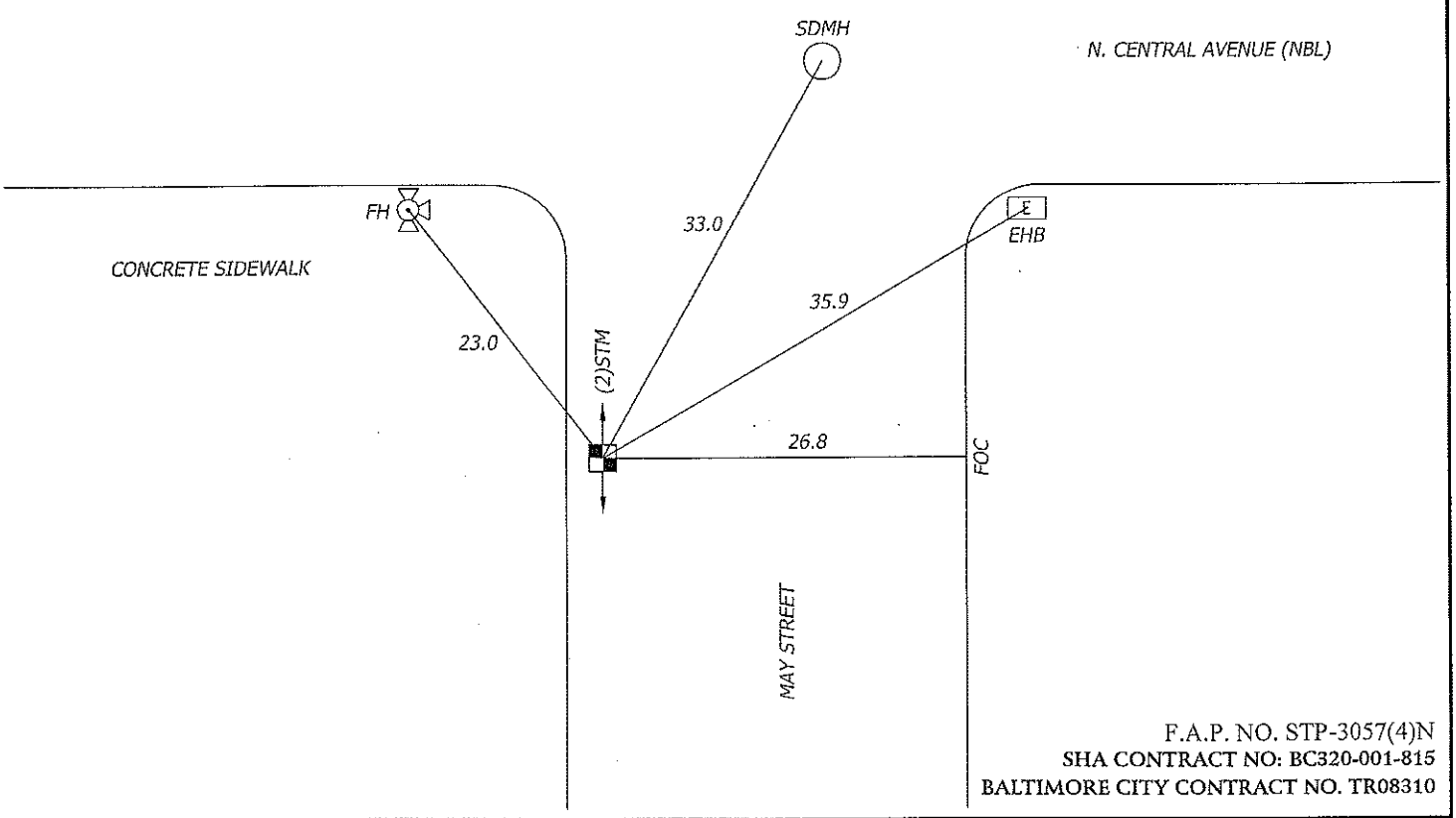

F.A.P. NO. STP-3057(4)N
SHA CONTRACT NO: BC320-001-815
BALTIMORE CITY CONTRACT NO. TR08310

A / I / DATA - TEST HOLE DATA SHEET

JOB #: 09134 TEST HOLE # : B18

PROJECT NAME:	CENTRAL AVENUE	EXCAVATION BY: A/I/DATA	DATE DUG: 12/11/09
PROJECT LOCATION:	BALTIMORE CITY, MARYLAND	FORM BY: KLS ASSISTED BY: MCG, CRB	CHECKED BY: SEW
CLIENT NAME:	WHITMAN REQUARDT AND ASSOCIATES, LLP	PAVING CONDITION:	GOOD
UTILITY REQUESTED:	12" STEAM SUPPLY & 20" STEAM RETURN	GENERAL SOIL CONDITIONS:	HARD DRY
UTILITY FOUND:	NO UTILITY FOUND	UTILITY CONDITION:	SEE NOTE
		MARKER SURVEYED BY:	A/I/DATA

SECTION VIEW OF TEST HOLE

NOT TO SCALE

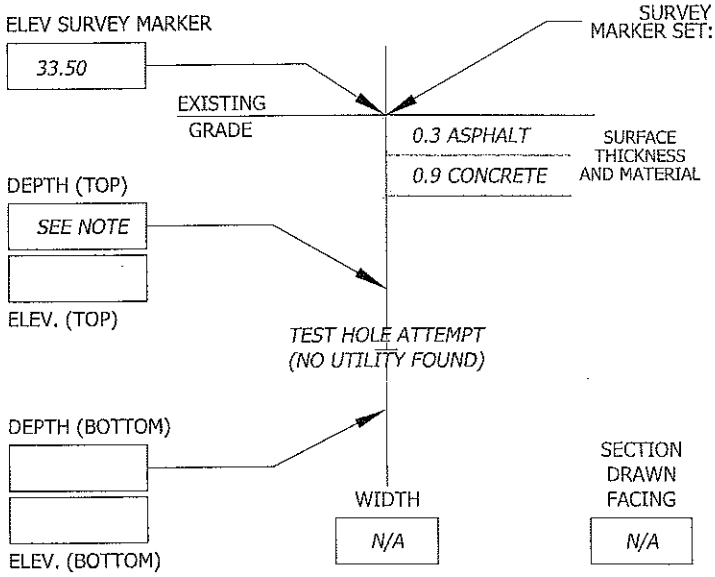

SURVEY MARKER SET: SEE NOTE ABOVE: N/A OF UTILITY MARKING TAPE INSTALLED: N/A

CONTROL POINTS PROVIDED BY: WHITMAN REQUARDT AND ASSOCIATES, LLP

105	N= -2202.90	E= 4545.83	ELEV= 27.43
106	N= -1748.30	E= 4524.82	ELEV= 32.27

A/I/DATA MARKER:	NORTHING	EASTING	ELEVATION
	-1292.72	4552.38	33.50

NOTES:
TEST HOLE PERFORMED TO A DEPTH OF 3.3'± AND ENCOUNTERED FLOW ASH. NO UTILITY FOUND. NO SURVEY MARKER SET. ALL TIES AND SURVEY TAKEN TO CENTER OF HOLE.

TEST HOLE DATA PRODUCED BY:
ACCURATE INFRASTRUCTURE DATA, INC.
1100 BATAVIA FARM ROAD, SUITE 200, BALTIMORE, MD 21237
PH: 410-686-5091 FAX: 410-686-5093
ALL MEASUREMENTS ARE SHOWN IN DECIMAL FEET EXCEPT WHERE NOTED

PLAN VIEW OF TEST HOLE

DIMENSIONS GOVERN; DO NOT SCALE

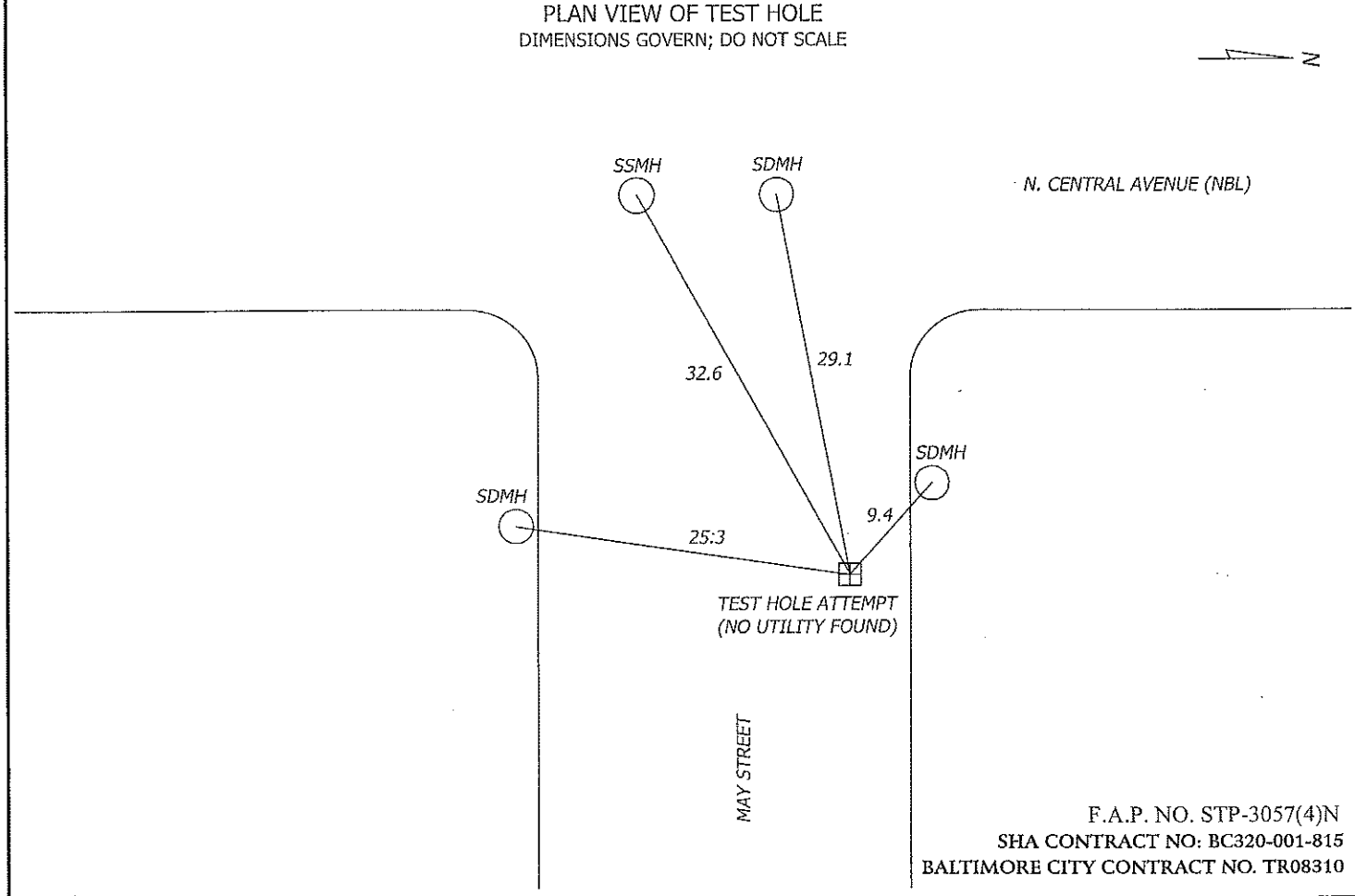

F.A.P. NO. STP-3057(4)N
SHA CONTRACT NO: BC320-001-815
BALTIMORE CITY CONTRACT NO. TR08310

A / I / DATA - TEST HOLE DATA SHEET

JOB #: 09134 TEST HOLE # : B18A

PROJECT NAME:	CENTRAL AVENUE	EXCAVATION BY: A/I/DATA	DATE DUG: 12/16/09
PROJECT LOCATION:	BALTIMORE CITY, MARYLAND	FORM BY: TDM ASSISTED BY: MCG, JMK	CHECKED BY: SEW
CLIENT NAME:	WHITMAN REQUARDT AND ASSOCIATES, LLP	PAVING CONDITION:	GOOD
UTILITY REQUESTED:	12" STEAM SUPPLY & 20" STEAM RETURN	GENERAL SOIL CONDITIONS:	FLOW ASH
UTILITY FOUND:	SEE NOTE	UTILITY CONDITION:	SEE NOTE
		MARKER SURVEYED BY:	A/I/DATA

SECTION VIEW OF TEST HOLE

NOT TO SCALE

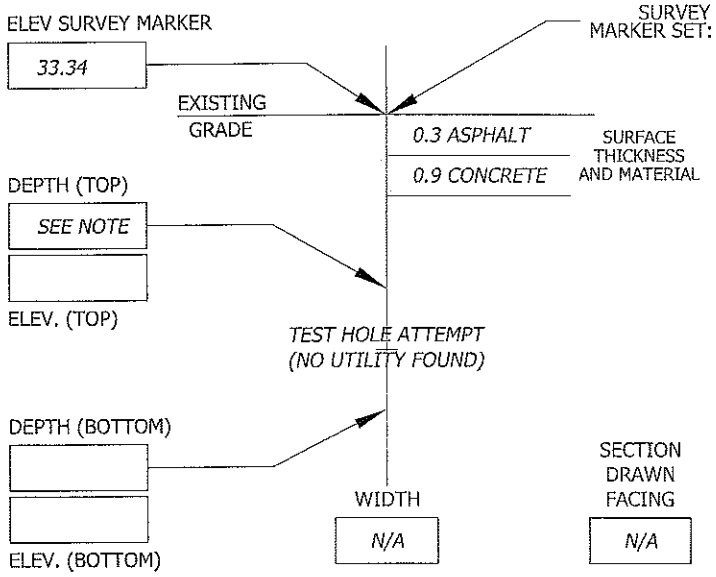

SURVEY MARKER SET: SEE NOTE ABOVE: N/A OF UTILITY MARKING TAPE INSTALLED: N/A

CONTROL POINTS PROVIDED BY: WHITMAN REQUARDT AND ASSOCIATES, LLP

105	N= -2202.90	E= 4545.83	ELEV= 27.43
106	N= -1748.30	E= 4524.82	ELEV= 32.27

A/I/DATA MARKER:	NORTHING	EASTING	ELEVATION
	-1290.21	4551.95	33.34

NOTES:
TEST HOLE PERFORMED 3'± NORTH OF REQUESTED LOCATION TH-B18 IN AN ATTEMPT TO AVOID FLOW ASH ENCOUNTERED PREVIOUSLY IN TEST HOLE . TEST HOLE PERFORMED TO A DEPTH OF 3'± AND ENCOUNTERED FLOW ASH. UNABLE TO PENATRATE FLOW ASH TO EXPOSE REQUESTED UTILITY. NO SURVEY MARKER SET. ALL TIES AND SURVEY TAKEN TO CENTER OF HOLE.

TEST HOLE DATA PRODUCED BY:
ACCURATE INFRASTRUCTURE DATA, INC.
1100 BATAVIA FARM ROAD, SUITE 200, BALTIMORE, MD 21237
PH: 410-686-5091 FAX: 410-686-5093
ALL MEASUREMENTS ARE SHOWN IN DECIMAL FEET EXCEPT WHERE NOTED

PLAN VIEW OF TEST HOLE

DIMENSIONS GOVERN; DO NOT SCALE

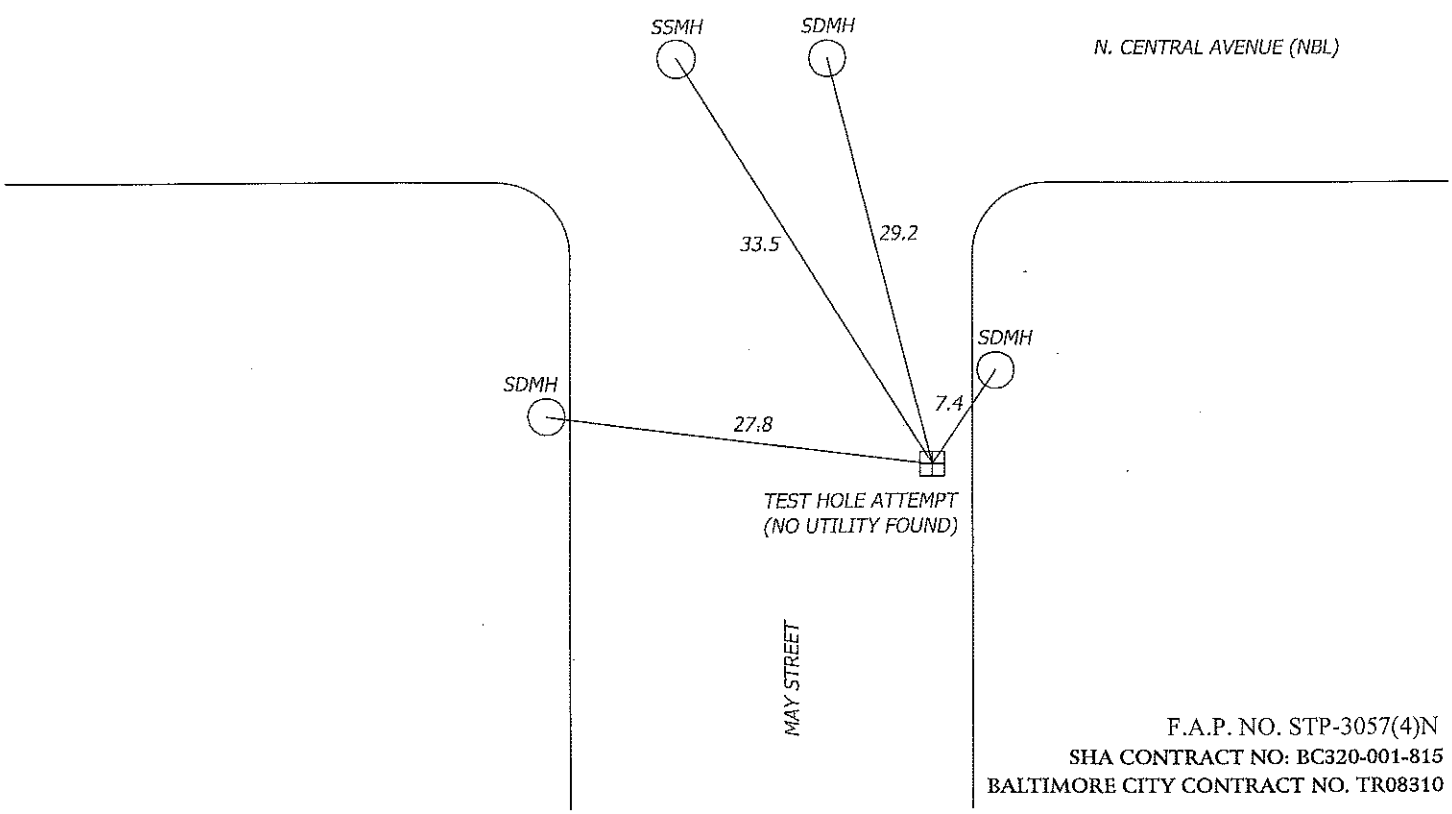

F.A.P. NO. STP-3057(4)N
SHA CONTRACT NO: BC320-001-815
BALTIMORE CITY CONTRACT NO. TR08310

A / I / DATA - TEST HOLE DATA SHEET

JOB #: 09134 TEST HOLE # : B19

PROJECT NAME:	CENTRAL AVENUE	EXCAVATION BY: A/I/DATA	DATE DUG: 12/14/09
PROJECT LOCATION:	BALTIMORE CITY, MARYLAND	FORM BY: MCG ASSISTED BY: TDM, JMK	CHECKED BY: SEW
CLIENT NAME:	WHITMAN REQUARDT AND ASSOCIATES, LLP	PAVING CONDITION:	GOOD
UTILITY REQUESTED:	6" STEAM SUPPLY & 3" STEAM RETURN	GENERAL SOIL CONDITIONS:	SOFT MOIST CLAY ROCKY
UTILITY FOUND:	(2) STEAM (SEE NOTE)	UTILITY CONDITION:	POOR
		MARKER SURVEYED BY:	A/I/DATA

SECTION VIEW OF TEST HOLE
NOT TO SCALE

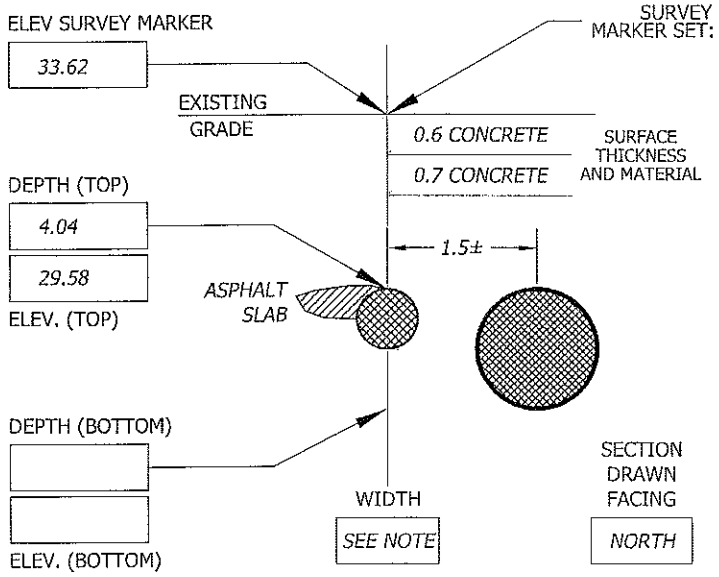

SURVEY MARKER SET: PK NAIL ABOVE: CROWN OF UTILITY MARKING TAPE INSTALLED: YELLOW

CONTROL POINTS PROVIDED BY: WHITMAN REQUARDT AND ASSOCIATES, LLP

105	N= -2202.90	E= 4545.83	ELEV= 27.43
106	N= -1748.30	E= 4524.82	ELEV= 32.27

A/I/DATA MARKER:	NORTHING	EASTING	ELEVATION
	-1296.45	4516.27	33.62

NOTES:
TEST HOLE REVEALED TWO STEAM PIPES. UNABLE TO ACCURATELY OBTAIN SIZES DUE TO CORROSION ON BOTH PIPES AND ASPHALT SLAB ON SMALLER PIPE. PK NAIL SET OVER APPROXIMATE CROWN OF SMALLER PIPE.

TEST HOLE DATA PRODUCED BY:
ACCURATE INFRASTRUCTURE DATA, INC.
1100 BATAVIA FARM ROAD, SUITE 200, BALTIMORE, MD 21237
PH: 410-686-5091 FAX: 410-686-5093
ALL MEASUREMENTS ARE SHOWN IN DECIMAL FEET EXCEPT WHERE NOTED

PLAN VIEW OF TEST HOLE
DIMENSIONS GOVERN; DO NOT SCALE

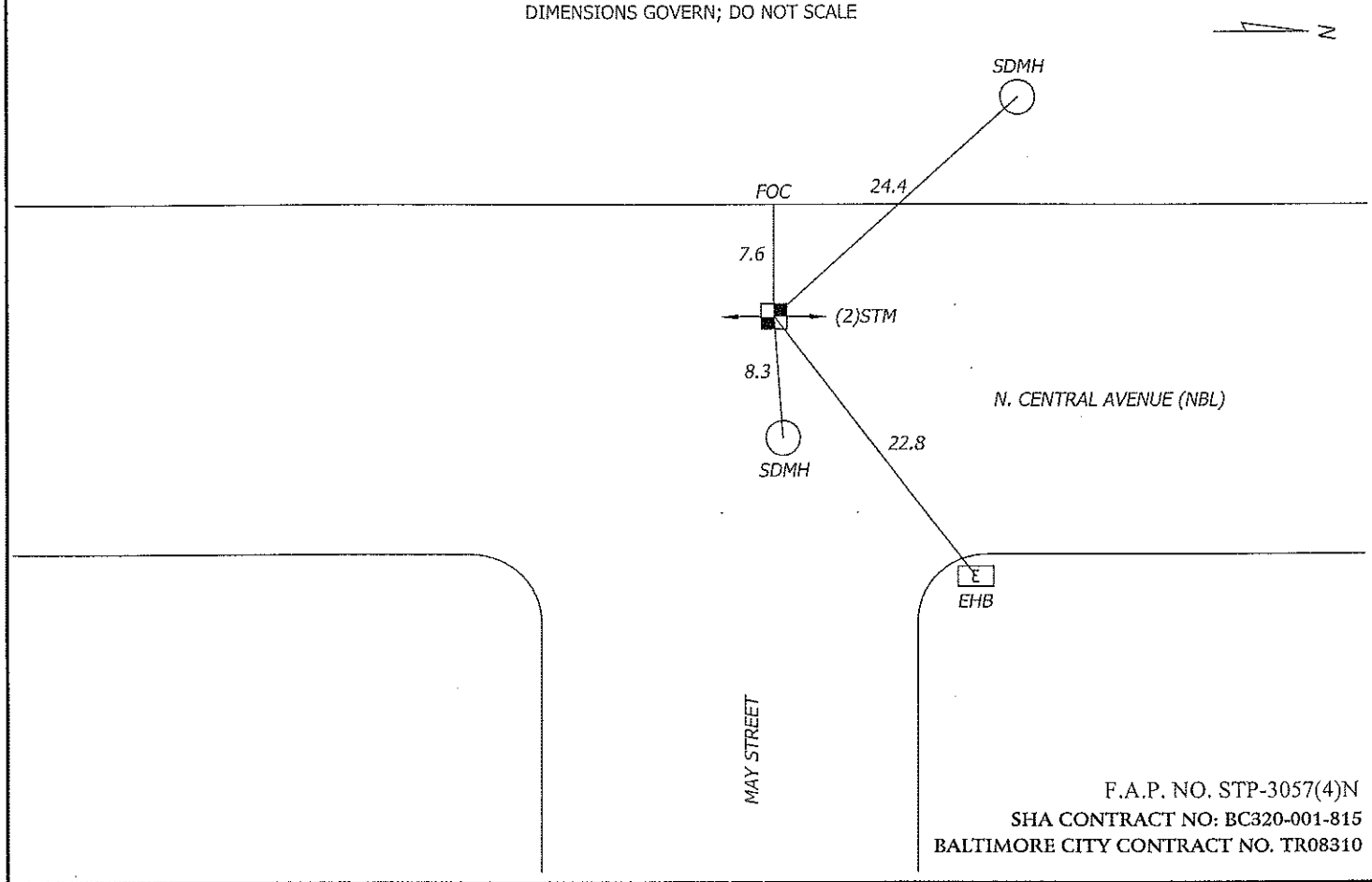

F.A.P. NO. STP-3057(4)N
SHA CONTRACT NO: BC320-001-815
BALTIMORE CITY CONTRACT NO. TR08310

A / I / DATA - TEST HOLE DATA SHEET

JOB #: 09134 TEST HOLE # : B20

PROJECT NAME:	CENTRAL AVENUE	EXCAVATION BY: A/I/DATA	DATE DUG: 12/28/09
PROJECT LOCATION:	BALTIMORE CITY, MARYLAND	FORM BY: RRB ASSISTED BY: TDM, GMC, JMK	CHECKED BY: SEW
CLIENT NAME:	WHITMAN REQUARDT AND ASSOCIATES, LLP	PAVING CONDITION:	FAIR
UTILITY REQUESTED:	ELECTRIC	GENERAL SOIL CONDITIONS:	SOFT HARD MOIST DRY CLAY
UTILITY FOUND:	CAST IN PLACE CONCRETE ELECTRIC DUCT	UTILITY CONDITION:	GOOD
		MARKER SURVEYED BY:	A/I/DATA

SECTION VIEW OF TEST HOLE

NOT TO SCALE

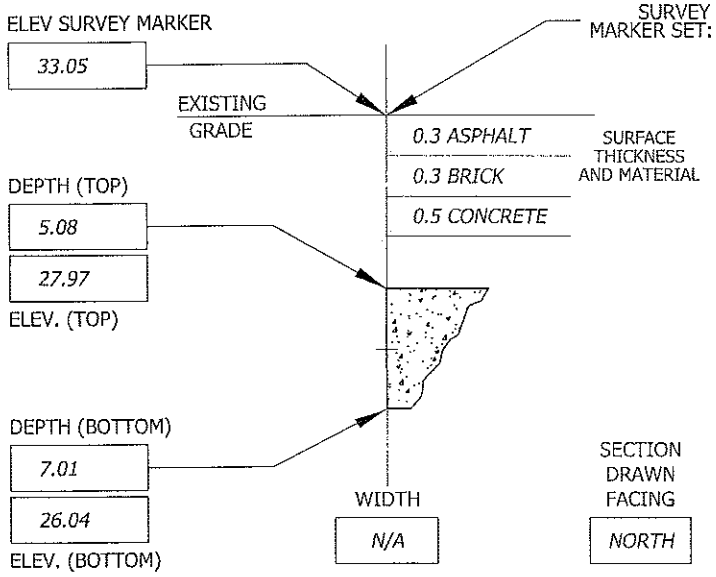

SURVEY MARKER SET: PK NAIL ABOVE: EDGE OF UTILITY MARKING TAPE INSTALLED: RED

CONTROL POINTS PROVIDED BY: WHITMAN REQUARDT AND ASSOCIATES, LLP

105	N= -2202.90	E= 4545.83	ELEV= 27.43
106	N= -1748.30	E= 4524.82	ELEV= 32.27

A/I/DATA MARKER:	NORTHING	EASTING	ELEVATION
	-1003.44	4452.41	33.05

NOTES:
PK NAIL SET OVER WEST EDGE OF DUCT.

TEST HOLE DATA PRODUCED BY:
ACCURATE INFRASTRUCTURE DATA, INC.
1100 BATAVIA FARM ROAD, SUITE 200, BALTIMORE, MD 21237
PH: 410-686-5091 FAX: 410-686-5093
ALL MEASUREMENTS ARE SHOWN IN DECIMAL FEET EXCEPT WHERE NOTED

PLAN VIEW OF TEST HOLE

DIMENSIONS GOVERN; DO NOT SCALE

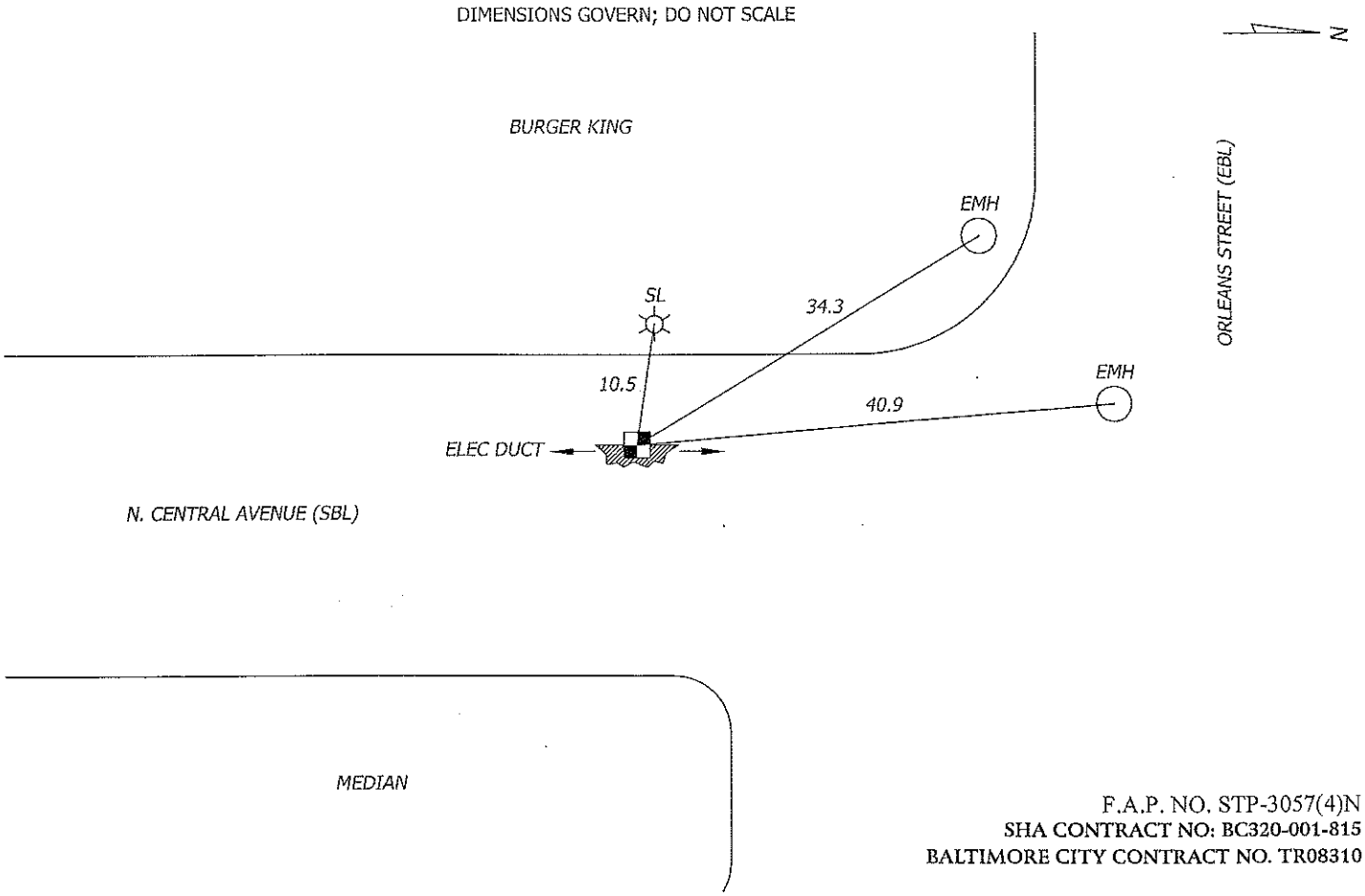

F.A.P. NO. STP-3057(4)N
SHA CONTRACT NO: BC320-001-815
BALTIMORE CITY CONTRACT NO. TR08310

A / I / DATA - TEST HOLE DATA SHEET

JOB #: 09134 TEST HOLE # : B21

PROJECT NAME:	CENTRAL AVENUE	EXCAVATION BY: A/I/DATA	DATE DUG: 12/16/09
PROJECT LOCATION:	BALTIMORE CITY, MARYLAND	FORM BY: RRB ASSISTED BY: MDI, TDL, CRB	CHECKED BY: SEW
CLIENT NAME:	WHITMAN REQUARDT AND ASSOCIATES, LLP	PAVING CONDITION:	FAIR
UTILITY REQUESTED:	16" WATER	GENERAL SOIL CONDITIONS:	SOFT WET CLAY ROCKY
UTILITY FOUND:	CAST IRON WATER (SEE NOTE)	UTILITY CONDITION:	POOR (SEE NOTE)
		MARKER SURVEYED BY:	A/I/DATA

SECTION VIEW OF TEST HOLE

NOT TO SCALE

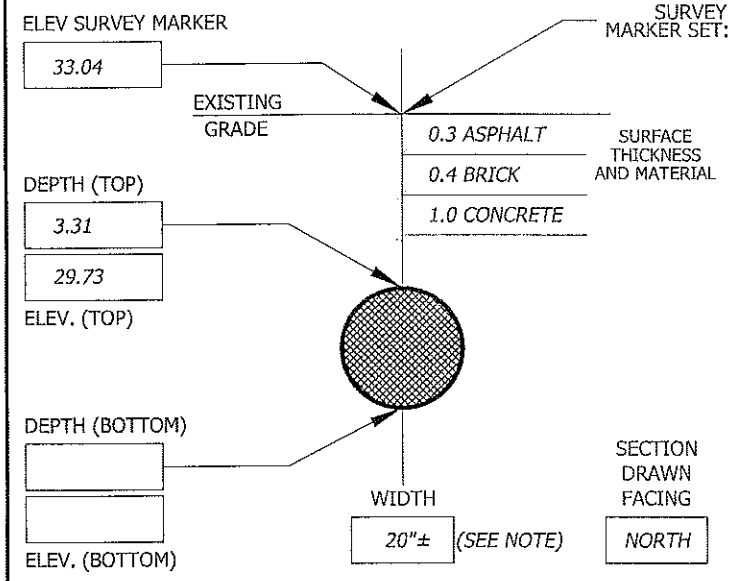

SURVEY MARKER SET: PK NAIL ABOVE: CROWN OF UTILITY MARKING TAPE INSTALLED: BLUE

CONTROL POINTS PROVIDED BY: WHITMAN REQUARDT AND ASSOCIATES, LLP

105	N= -2202.90	E= 4545.83	ELEV= 27.43
106	N= -1748.30	E= 4524.82	ELEV= 32.27

A/I/DATA MARKER:	NORTHING	EASTING	ELEVATION
	-1004.70	4457.34	33.04

NOTES:
UNABLE TO OBTAIN ACCURATE SIZE DUE TO SEVERE CORROSION ON PIPE. PLANS INDICATE A 16" PIPE AT THIS LOCATION. PK NAIL SET OVER APPROXIMATE CROWN OF PIPE.

TEST HOLE DATA PRODUCED BY:
ACCURATE INFRASTRUCTURE DATA, INC.
1100 BATAVIA FARM ROAD, SUITE 200, BALTIMORE, MD 21237
PH: 410-686-5091 FAX: 410-686-5093
ALL MEASUREMENTS ARE SHOWN IN DECIMAL FEET EXCEPT WHERE NOTED

PLAN VIEW OF TEST HOLE

DIMENSIONS GOVERN; DO NOT SCALE

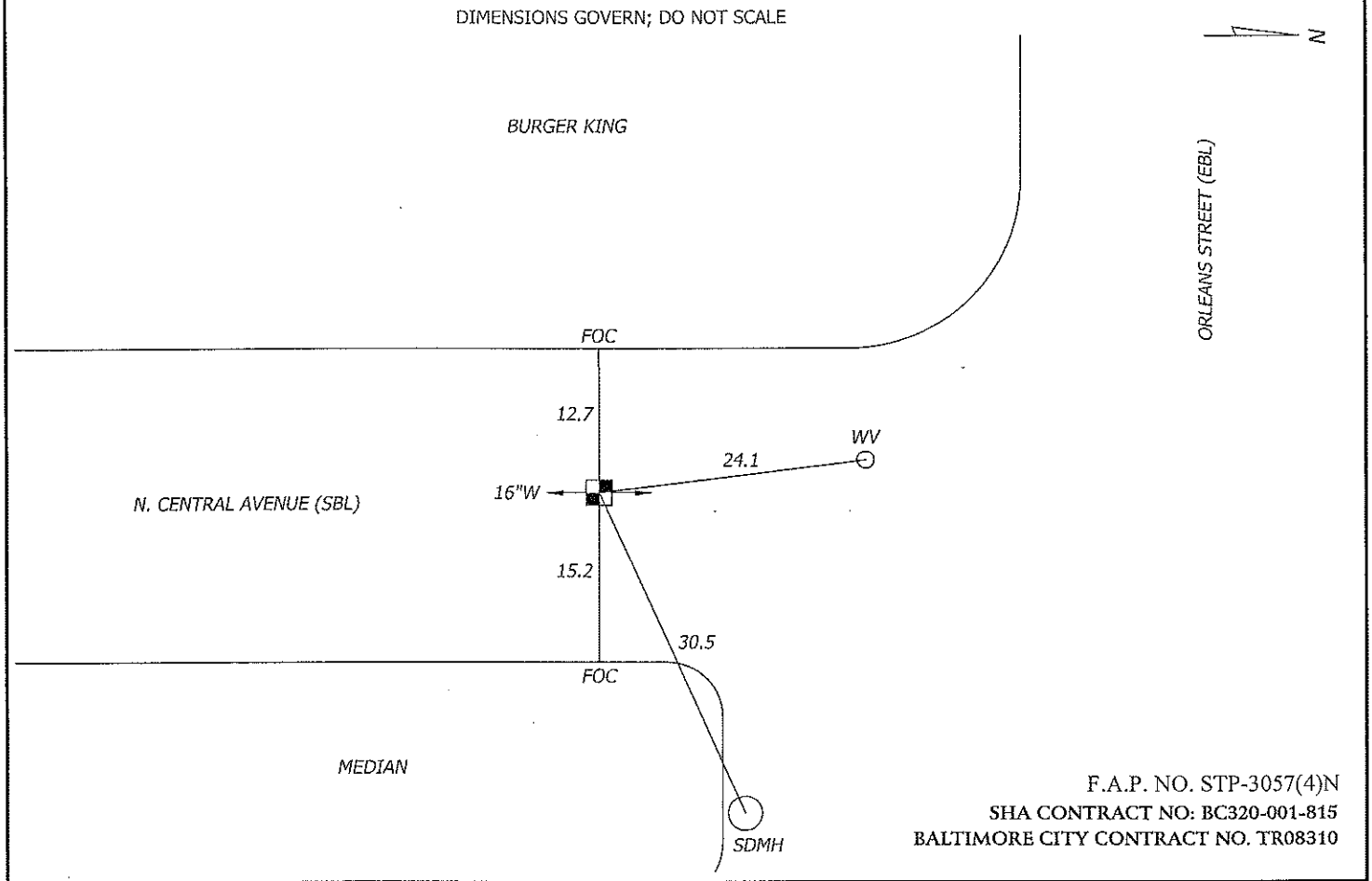

F.A.P. NO. STP-3057(4)N
SHA CONTRACT NO: BC320-001-815
BALTIMORE CITY CONTRACT NO. TR08310

A / I / DATA - TEST HOLE DATA SHEET

JOB #: 09134 TEST HOLE # : B22

PROJECT NAME:	CENTRAL AVENUE	EXCAVATION BY: A/I/DATA	DATE DUG: 01/05/10
PROJECT LOCATION:	BALTIMORE CITY, MARYLAND	FORM BY: KLS ASSISTED BY: RMS, MCG	CHECKED BY: SEW
CLIENT NAME:	WHITMAN REQUARDT AND ASSOCIATES, LLP	PAVING CONDITION:	GOOD
UTILITY REQUESTED:	SANITARY	GENERAL SOIL CONDITIONS:	SOFT MOIST SAND CLAY ROCKY
UTILITY FOUND:	NO UTILITY FOUND	UTILITY CONDITION:	GOOD
		MARKER SURVEYED BY:	A/I/DATA

SECTION VIEW OF TEST HOLE

NOT TO SCALE

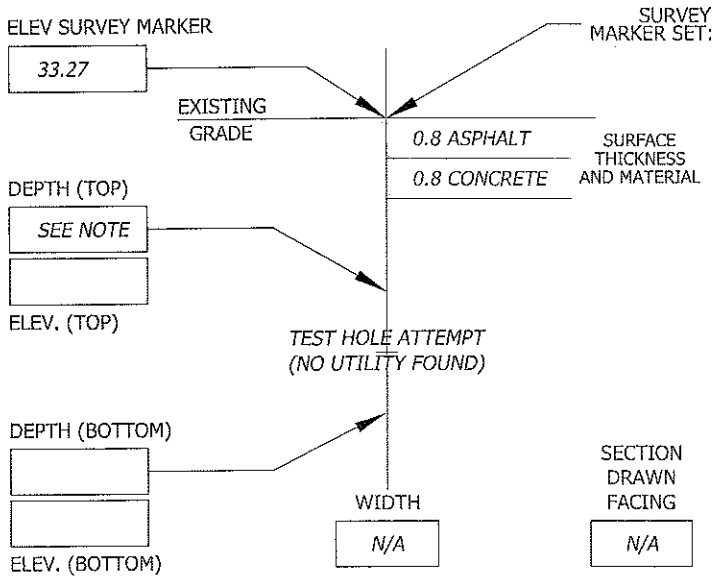

SURVEY MARKER SET: SEE NOTE ABOVE: N/A OF UTILITY MARKING TAPE INSTALLED: N/A

CONTROL POINTS PROVIDED BY: WHITMAN REQUARDT AND ASSOCIATES, LLP

105	N= -2202.90	E= 4545.83	ELEV= 27.43
106	N= -1748.30	E= 4524.82	ELEV= 32.27

A/I/DATA MARKER:	NORTHING	EASTING	ELEVATION
	-925.92	4530.90	33.27

NOTES:
TEST HOLE PERFORMED TO A DEPTH OF 8'± AND VISUALLY PROBED TO 9'±. NO UTILITY FOUND. NO SURVEY MARKER SET. ALL TIES AND SURVEY TAKEN TO CENTER OF HOLE.

TEST HOLE DATA PRODUCED BY:
ACCURATE INFRASTRUCTURE DATA, INC.
1100 BATAVIA FARM ROAD, SUITE 200, BALTIMORE, MD 21237
PH: 410-686-5091 FAX: 410-686-5093
ALL MEASUREMENTS ARE SHOWN IN DECIMAL FEET EXCEPT WHERE NOTED

PLAN VIEW OF TEST HOLE

DIMENSIONS GOVERN; DO NOT SCALE

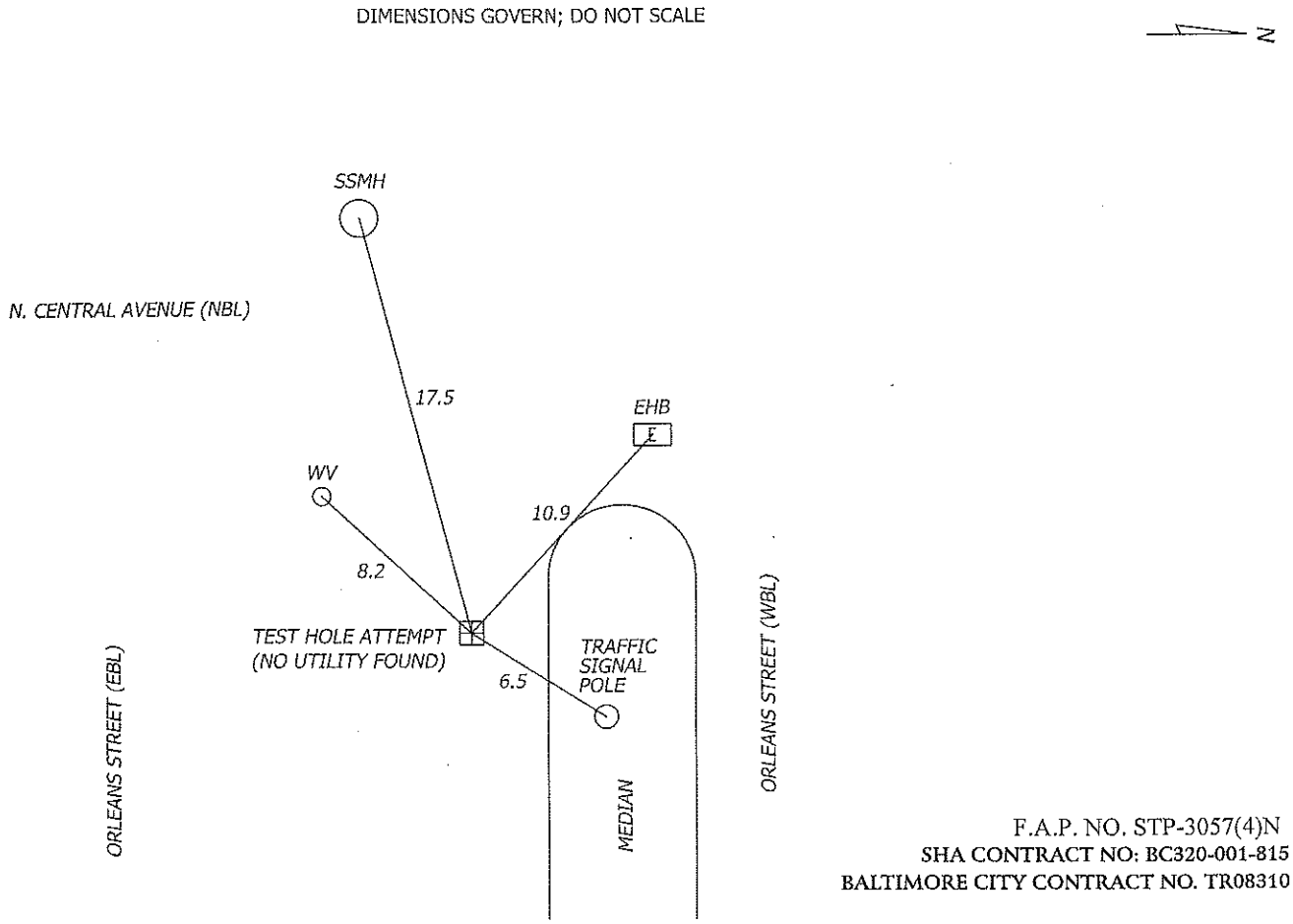

F.A.P. NO. STP-3057(4)N
SHA CONTRACT NO: BC320-001-815
BALTIMORE CITY CONTRACT NO. TR08310

A / I / DATA - TEST HOLE DATA SHEET

JOB #: 09134 TEST HOLE # : B23

PROJECT NAME:	CENTRAL AVENUE	EXCAVATION BY: A/I/DATA	DATE DUG: 12/30/09
PROJECT LOCATION:	BALTIMORE CITY, MARYLAND	FORM BY: RMS ASSISTED BY: MCG, JPW, MDI	CHECKED BY: SEW
CLIENT NAME:	WHITMAN REQUARDT AND ASSOCIATES, LLP	PAVING CONDITION:	GOOD
UTILITY REQUESTED:	16" STEAM & 24" CONDENSATE	GENERAL SOIL CONDITIONS:	SOFT MOIST CLAY
UTILITY FOUND:	CONCRETE (SEE NOTE)	UTILITY CONDITION:	SEE NOTE
		MARKER SURVEYED BY:	A/I/DATA

SECTION VIEW OF TEST HOLE

NOT TO SCALE

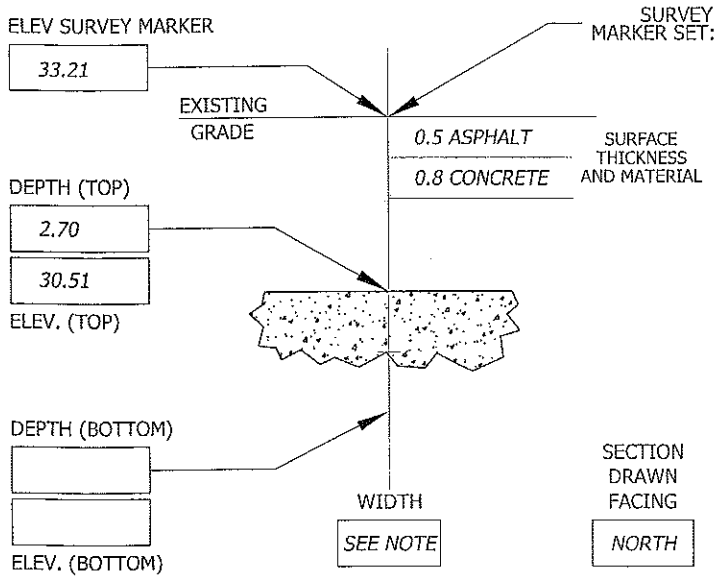

CONTROL POINTS PROVIDED BY: WHITMAN REQUARDT AND ASSOCIATES, LLP

105	N= -2202.90	E= 4545.83	ELEV= 27.43
106	N= -1748.30	E= 4524.82	ELEV= 32.27

A/I/DATA MARKER:	NORTHING	EASTING	ELEVATION
	-872.82	4499.31	33.21

NOTES:
TEST HOLE PERFORMED AT REQUESTED LOCATION AND REVEALED A CONCRETE SLAB, BELIEVED TO BE AN ENCASEMENT FOR THE STEAM AND CONDENSATE. UNABLE TO CONTINUE EXCAVATION. PK NAIL SET OVER STRONGEST ELECTRONIC SIGNAL.

TEST HOLE DATA PRODUCED BY:
ACCURATE INFRASTRUCTURE DATA, INC.
1100 BATAVIA FARM ROAD, SUITE 200, BALTIMORE, MD 21237
PH: 410-686-5091 FAX: 410-686-5093

ALL MEASUREMENTS ARE SHOWN IN DECIMAL FEET EXCEPT WHERE NOTED

PLAN VIEW OF TEST HOLE

DIMENSIONS GOVERN; DO NOT SCALE

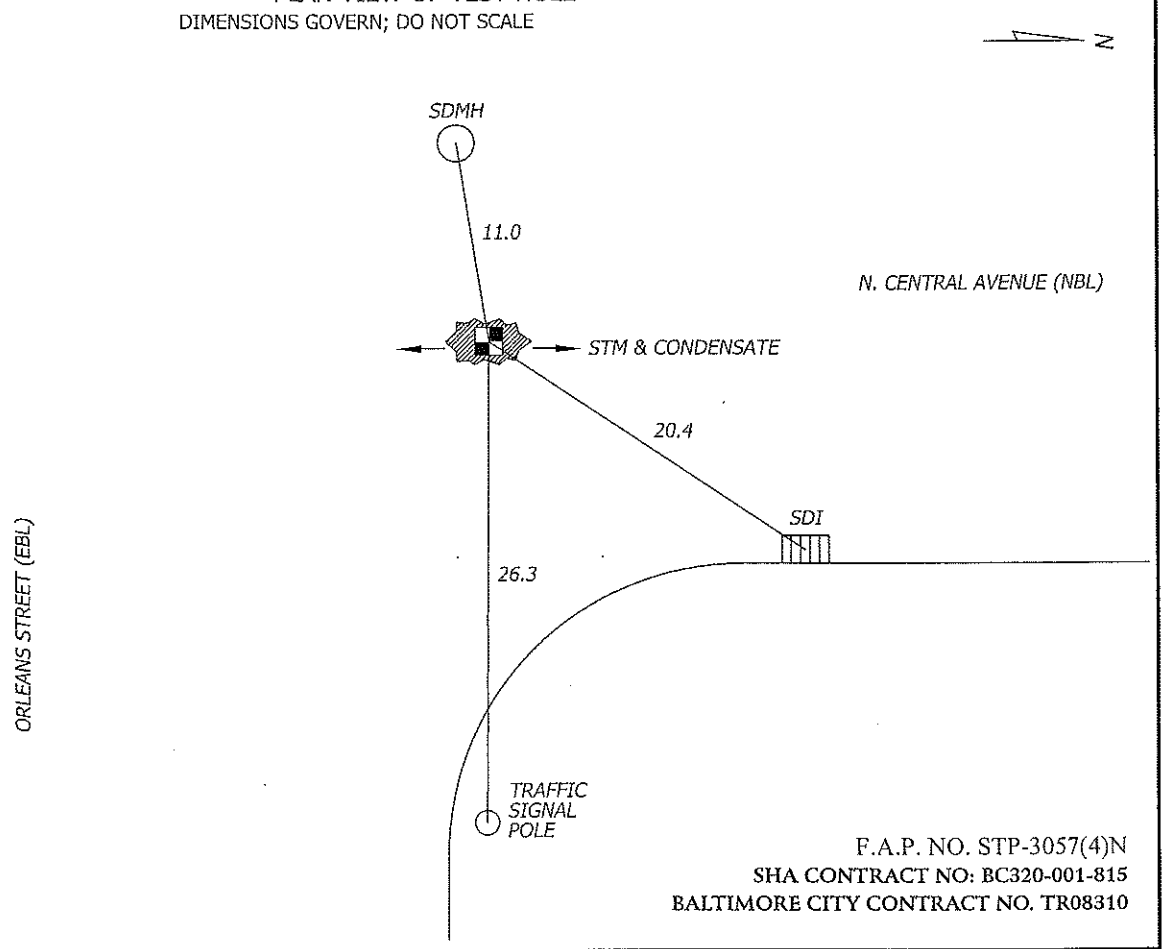

F.A.P. NO. STP-3057(4)N
SHA CONTRACT NO: BC320-001-815
BALTIMORE CITY CONTRACT NO. TR08310

A / I / DATA - TEST HOLE DATA SHEET

JOB #: 09134 TEST HOLE # : B24

PROJECT NAME:	CENTRAL AVENUE	EXCAVATION BY: A/I/DATA	DATE DUG: 12/15/09
PROJECT LOCATION:	BALTIMORE CITY, MARYLAND	FORM BY: KLS ASSISTED BY: TDL, MDI	CHECKED BY: SEW
CLIENT NAME:	WHITMAN REQUARDT AND ASSOCIATES, LLP	PAVING CONDITION:	GOOD
UTILITY REQUESTED:	30" STORM DRAIN	GENERAL SOIL CONDITIONS:	SOFT MOIST CLAY ROCKY
UTILITY FOUND:	30" RCP STORM DRAIN	UTILITY CONDITION:	GOOD
		MARKER SURVEYED BY:	A/I/DATA

SECTION VIEW OF TEST HOLE

NOT TO SCALE

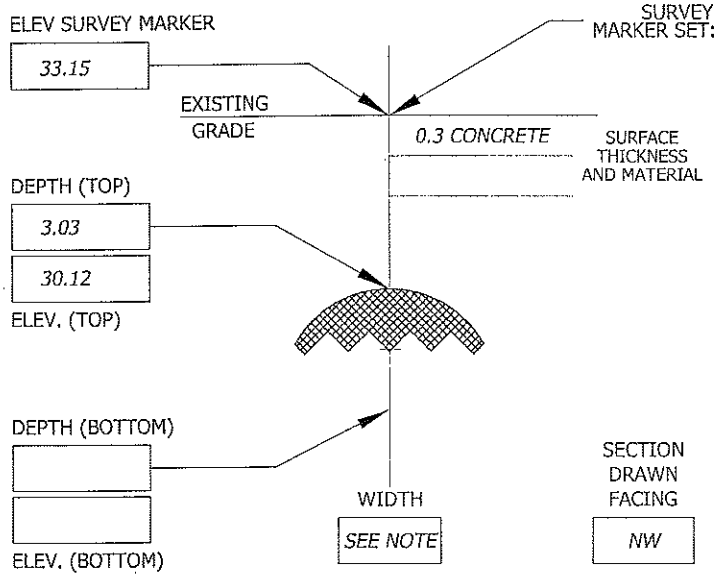

SURVEY MARKER SET: CHIS "X" ABOVE: CROWN OF UTILITY MARKING TAPE INSTALLED: GREEN

CONTROL POINTS PROVIDED BY: WHITMAN REQUARDT AND ASSOCIATES, LLP

105	N= -2202.90	E= 4545.83	ELEV= 27.43
106	N= -1748.30	E= 4524.82	ELEV= 32.27

A/I/DATA MARKER:	NORTHING	EASTING	ELEVATION
	-845.50	4436.44	33.15

NOTES:
UNABLE TO OBTAIN SIZE OF EXPOSED PIPE DUE TO LARGE SIZE OF PIPE AND LIMITED SIZE OF TEST HOLE. PLANS INDICATE A 30" PIPE AT THIS LOCATION. CHIS "X" SET OVER APPROXIMATE CROWN OF PIPE.

TEST HOLE DATA PRODUCED BY:
ACCURATE INFRASTRUCTURE DATA, INC.
1100 BATAVIA FARM ROAD, SUITE 200, BALTIMORE, MD 21237
PH: 410-686-5091 FAX: 410-686-5093
ALL MEASUREMENTS ARE SHOWN IN DECIMAL FEET EXCEPT WHERE NOTED

PLAN VIEW OF TEST HOLE

DIMENSIONS GOVERN; DO NOT SCALE

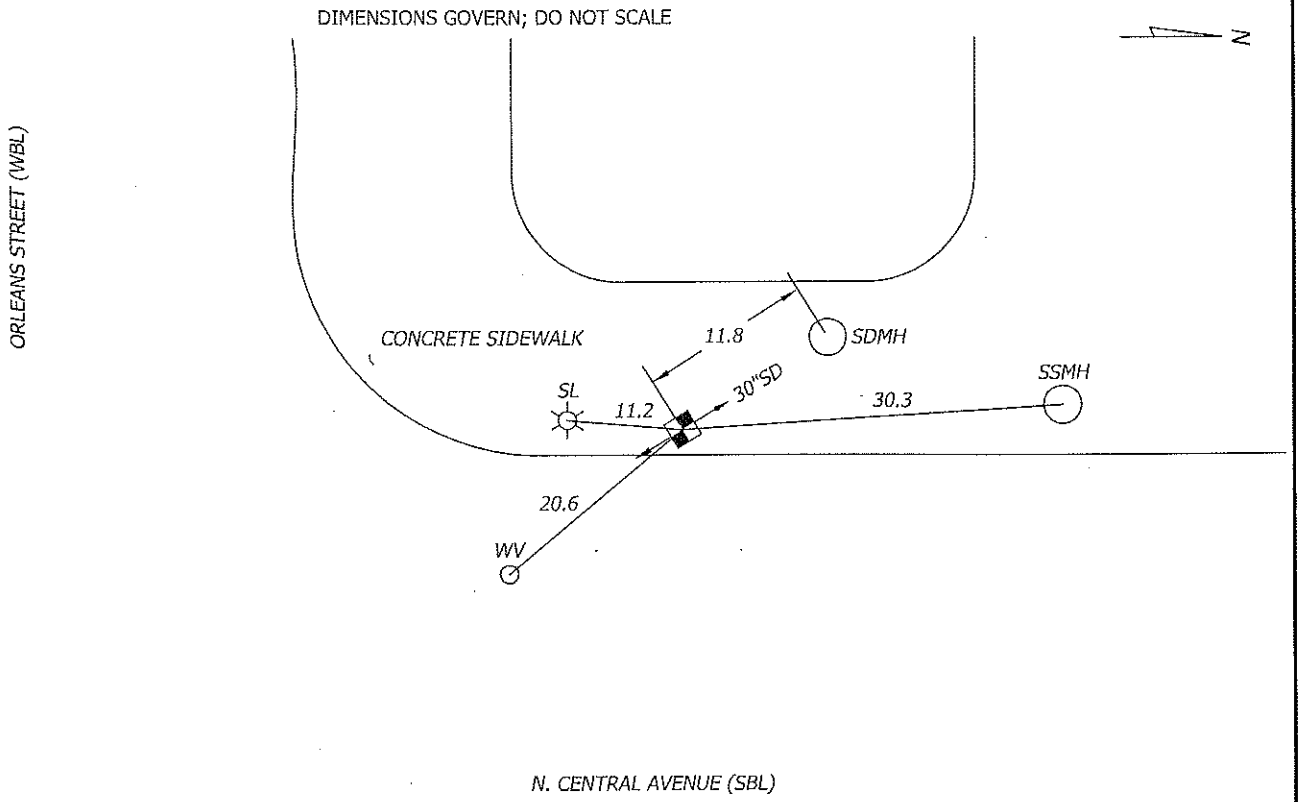

F.A.P. NO. STP-3057(4)N
SHA CONTRACT NO: BC320-001-815
BALTIMORE CITY CONTRACT NO. TR08310

A / I / DATA - TEST HOLE DATA SHEET

JOB #: 09134 TEST HOLE # : B25

PROJECT NAME:	CENTRAL AVENUE	EXCAVATION BY: A/I/DATA	DATE DUG: 12/23/09
PROJECT LOCATION:	BALTIMORE CITY, MARYLAND	FORM BY: RMS ASSISTED BY: MDI, JPW	CHECKED BY: SEW
CLIENT NAME:	WHITMAN REQUARDT AND ASSOCIATES, LLP	PAVING CONDITION:	GOOD
UTILITY REQUESTED:	ELECTRIC DUCT	GENERAL SOIL CONDITIONS:	SOFT MOIST SAND ROCKY
UTILITY FOUND:	CAST IN PLACE CONCRETE ELECTRIC DUCT	UTILITY CONDITION:	GOOD
		MARKER SURVEYED BY:	A/I/DATA

SECTION VIEW OF TEST HOLE

NOT TO SCALE

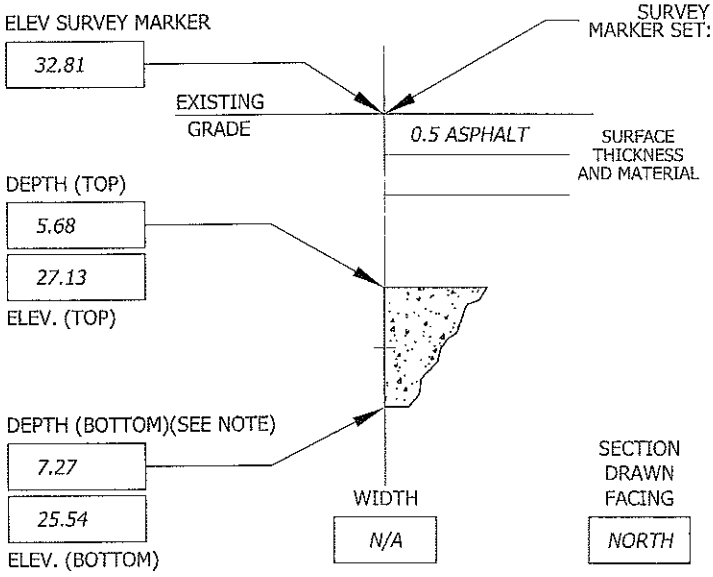

SURVEY MARKER SET: PK NAIL ABOVE: EDGE OF UTILITY MARKING TAPE INSTALLED: RED

CONTROL POINTS PROVIDED BY: WHITMAN REQUARDT AND ASSOCIATES, LLP

105	N= -2202.90	E= 4545.83	ELEV= 27.43
106	N= -1748.30	E= 4524.82	ELEV= 32.27

A/I/DATA MARKER:	NORTHING	EASTING	ELEVATION
	-847.92	4442.99	32.81

NOTES:
PK NAIL SET OVER WEST EDGE OF DUCT. BOTTOM COVER IS APPROXIMATE DUE TO ROCKS ENCOUNTERED AT BOTTOM OF DUCT.

TEST HOLE DATA PRODUCED BY:
ACCURATE INFRASTRUCTURE DATA, INC.
1100 BATAVIA FARM ROAD, SUITE 200, BALTIMORE, MD 21237
PH: 410-686-5091 FAX: 410-686-5093
ALL MEASUREMENTS ARE SHOWN IN DECIMAL FEET EXCEPT WHERE NOTED

PLAN VIEW OF TEST HOLE

DIMENSIONS GOVERN; DO NOT SCALE

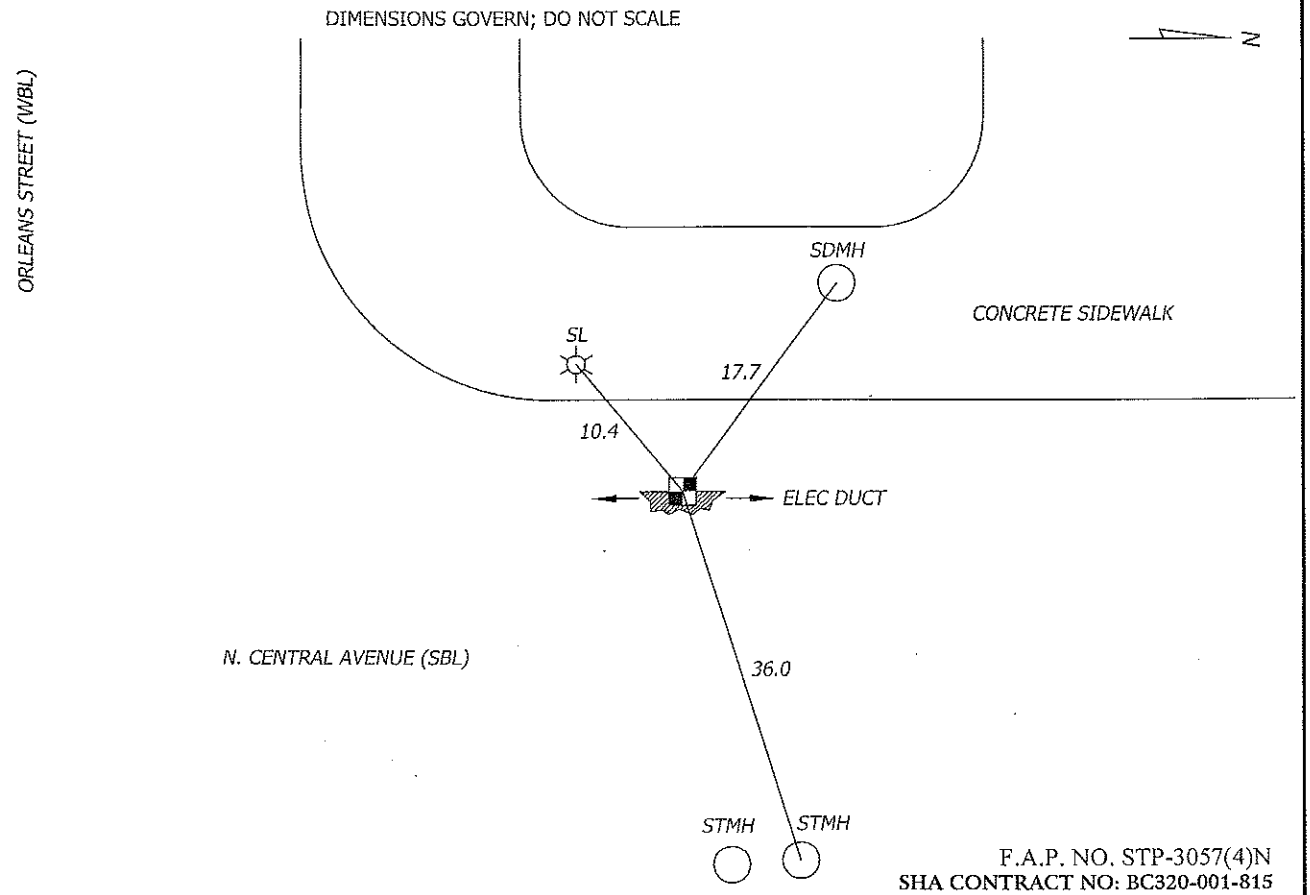

F.A.P. NO. STP-3057(4)N
SHA CONTRACT NO: BC320-001-815
BALTIMORE CITY CONTRACT NO. TR08310

A / I / DATA - TEST HOLE DATA SHEET

JOB #: 09134 TEST HOLE # : B26

PROJECT NAME:	CENTRAL AVENUE	EXCAVATION BY: A/I/DATA	DATE DUG: 12/16/09
PROJECT LOCATION:	BALTIMORE CITY, MARYLAND	FORM BY: RRB ASSISTED BY: TDL, MDI, CRB	CHECKED BY: SEW
CLIENT NAME:	WHITMAN REQUARDT AND ASSOCIATES, LLP	PAVING CONDITION:	FAIR
UTILITY REQUESTED:	16" WATER	GENERAL SOIL CONDITIONS:	SOFT WET SAND ROCKY
UTILITY FOUND:	WATER (SEE NOTE)	UTILITY CONDITION:	POOR (SEE NOTE)
		MARKER SURVEYED BY:	A/I/DATA

SECTION VIEW OF TEST HOLE

NOT TO SCALE

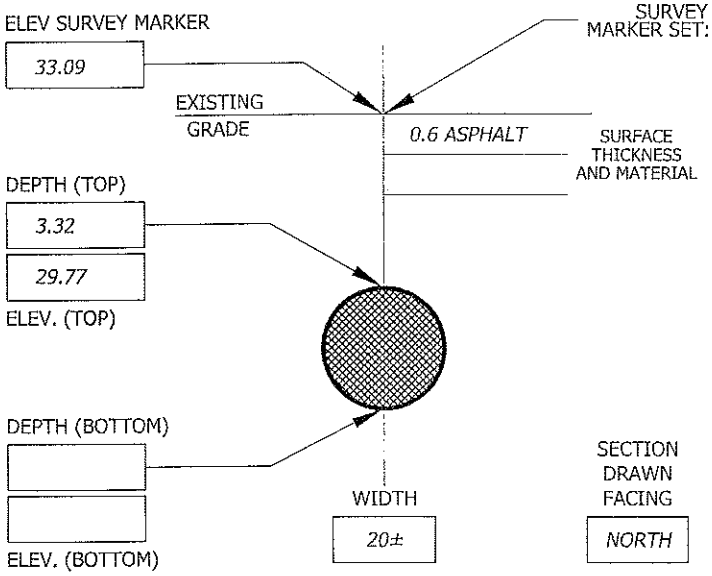

SURVEY MARKER SET: PK NAIL ABOVE: CROWN OF UTILITY MARKING TAPE INSTALLED: BLUE

CONTROL POINTS PROVIDED BY: WHITMAN REQUARDT AND ASSOCIATES, LLP

105	N= -2202.90	E= 4545.83	ELEV= 27.43
106	N= -1748.30	E= 4524.82	ELEV= 32.27

A/I/DATA MARKER:	NORTHING	EASTING	ELEVATION
	-848.94	4451.96	33.09

NOTES:
UNABLE TO OBTAIN ACCURATE SIZE AND MATERIAL DUE TO SEVERE CORROSION ON PIPE. PLANS INDICATE A 16" PIPE AT THIS LOCATION. PK NAIL SET OVER APPROXIMATE CROWN OF PIPE.

TEST HOLE DATA PRODUCED BY:
ACCURATE INFRASTRUCTURE DATA, INC.
1100 BATAVIA FARM ROAD, SUITE 200, BALTIMORE, MD 21237
PH: 410-686-5091 FAX: 410-686-5093
ALL MEASUREMENTS ARE SHOWN IN DECIMAL FEET EXCEPT WHERE NOTED

PLAN VIEW OF TEST HOLE

DIMENSIONS GOVERN; DO NOT SCALE

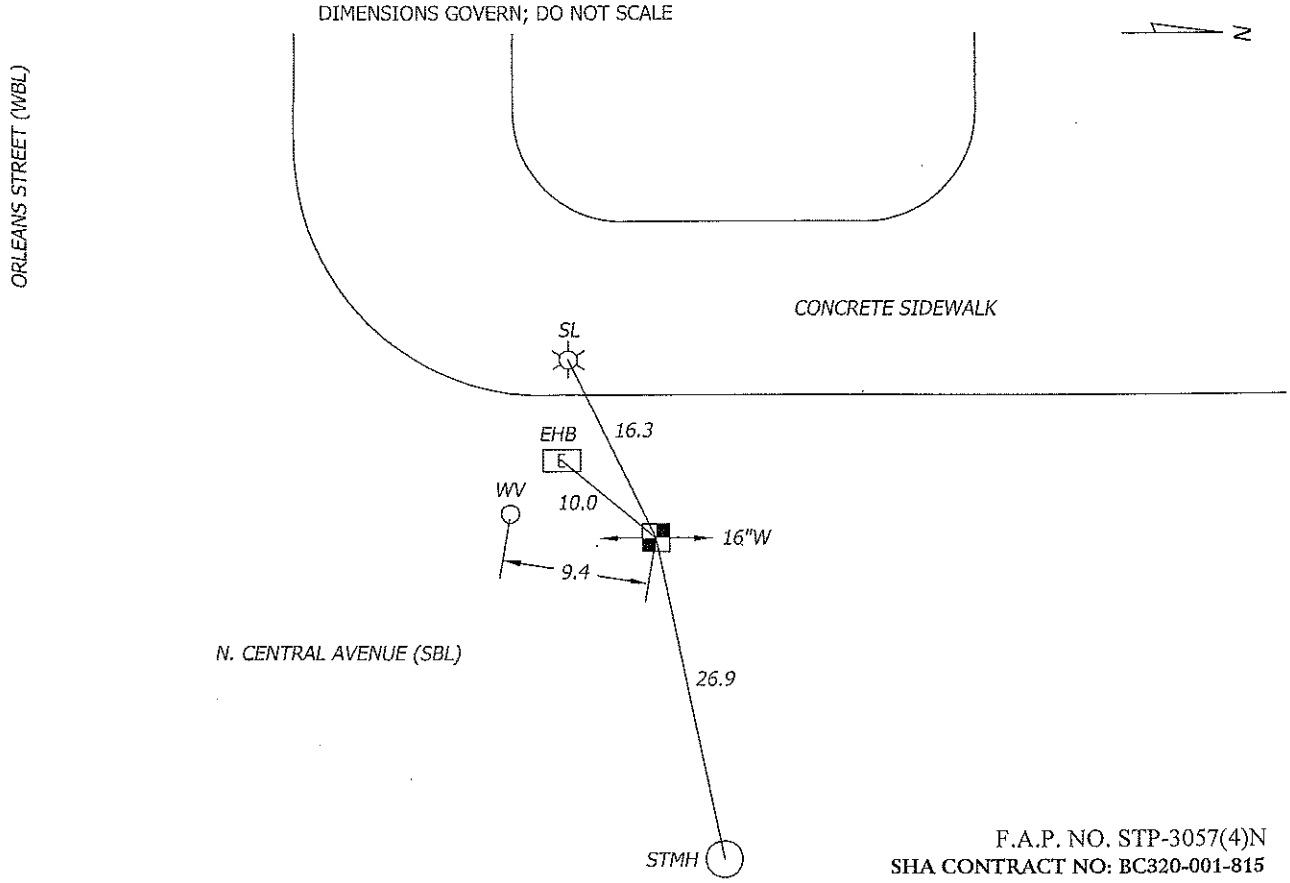

F.A.P. NO. STP-3057(4)N
SHA CONTRACT NO: BC320-001-815
BALTIMORE CITY CONTRACT NO. TR08310

A / I / DATA - TEST HOLE DATA SHEET

JOB #: 09134 TEST HOLE # : B27

PROJECT NAME:	CENTRAL AVENUE	EXCAVATION BY: A/I/DATA	DATE DUG: 12/15/09
PROJECT LOCATION:	BALTIMORE CITY, MARYLAND	FORM BY: TDM ASSISTED BY: MCG, JMK, KLS	CHECKED BY: SEW
CLIENT NAME:	WHITMAN REQUARDT AND ASSOCIATES, LLP	PAVING CONDITION:	GOOD
UTILITY REQUESTED:	6" WATER	GENERAL SOIL CONDITIONS:	SOFT MOIST CLAY ROCKY
UTILITY FOUND:	6" CAST IRON WATER	UTILITY CONDITION:	POOR
		MARKER SURVEYED BY:	A/I/DATA

SECTION VIEW OF TEST HOLE

NOT TO SCALE

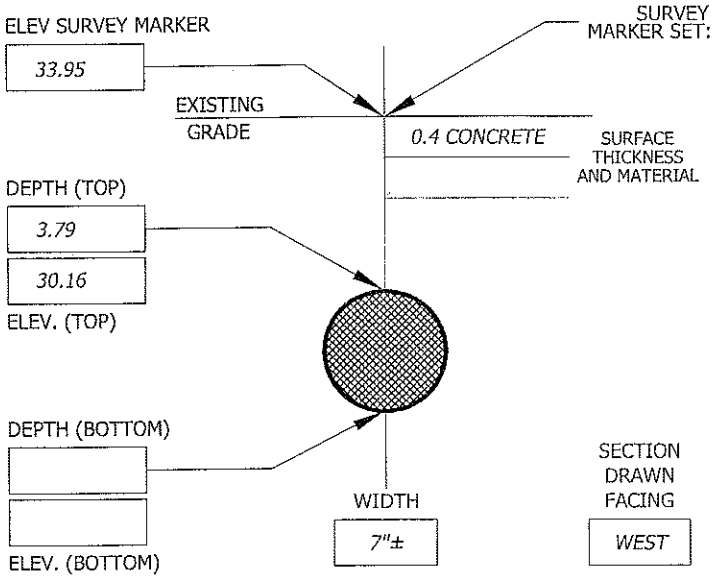

SURVEY MARKER SET: CHIS "X" ABOVE: CROWN OF UTILITY MARKING TAPE INSTALLED: BLUE

CONTROL POINTS PROVIDED BY: WHITMAN REQUARDT AND ASSOCIATES, LLP

105	N= -2202.90	E= 4545.83	ELEV= 27.43
106	N= -1748.30	E= 4524.82	ELEV= 32.27

A/I/DATA MARKER:	NORTHING	EASTING	ELEVATION
	-493.32	4422.06	33.95

NOTES:
TEST HOLE REVEALED SEVERE CORROSION ON PIPE. PIPE ALSO MAKES A 45° VERTICAL BEND HEADING WEST IN TEST HOLE. COVER TAKEN TO HORIZONTAL PORTION OF PIPE BEFORE IT MAKES THE VERTICAL BEND.

TEST HOLE DATA PRODUCED BY:
ACCURATE INFRASTRUCTURE DATA, INC.
1100 BATAVIA FARM ROAD, SUITE 200, BALTIMORE, MD 21237
PH: 410-686-5091 FAX: 410-686-5093
ALL MEASUREMENTS ARE SHOWN IN DECIMAL FEET EXCEPT WHERE NOTED

PLAN VIEW OF TEST HOLE

DIMENSIONS GOVERN; DO NOT SCALE

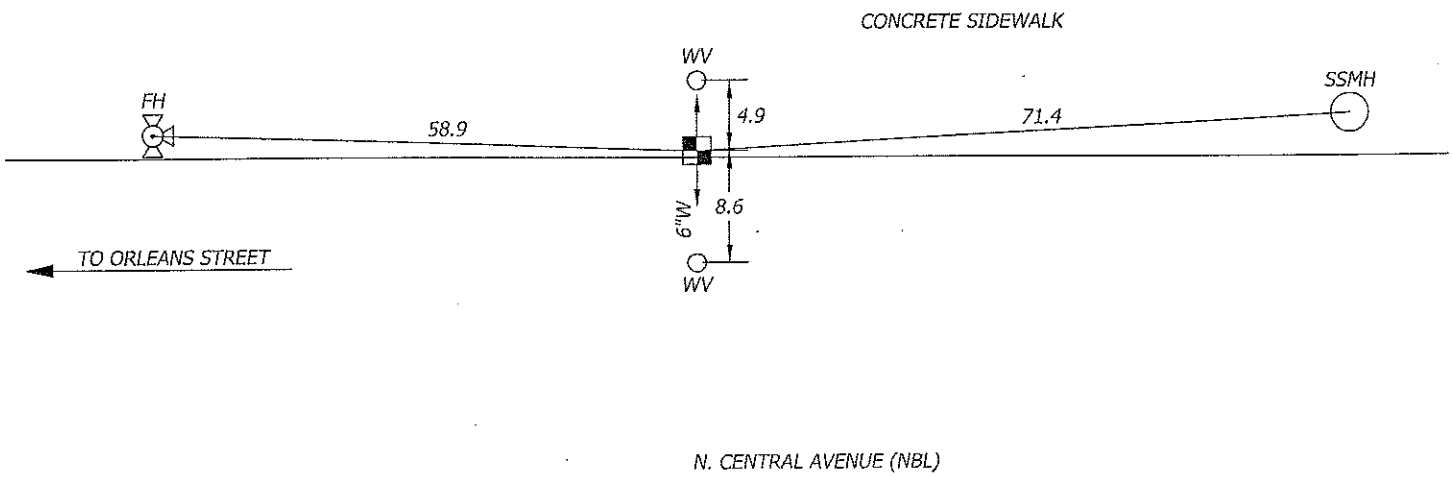

F.A.P. NO. STP-3057(4)N
SHA CONTRACT NO: BC320-001-815
BALTIMORE CITY CONTRACT NO. TR08310

A / I / DATA - TEST HOLE DATA SHEET

JOB #: 09134 TEST HOLE # : B28

PROJECT NAME:	CENTRAL AVENUE	EXCAVATION BY: A/I/DATA	DATE DUG: 12/15/09
PROJECT LOCATION:	BALTIMORE CITY, MARYLAND	FORM BY: TDM ASSISTED BY: KLS, TDL, MDI	CHECKED BY: SEW
CLIENT NAME:	WHITMAN REQUARDT AND ASSOCIATES, LLP	PAVING CONDITION:	GOOD
UTILITY REQUESTED:	6" GAS	GENERAL SOIL CONDITIONS:	SOFT MOIST SAND ROCKY
UTILITY FOUND:	6" CAST IRON GAS	UTILITY CONDITION:	FAIR
		MARKER SURVEYED BY:	A/I/DATA

SECTION VIEW OF TEST HOLE

NOT TO SCALE

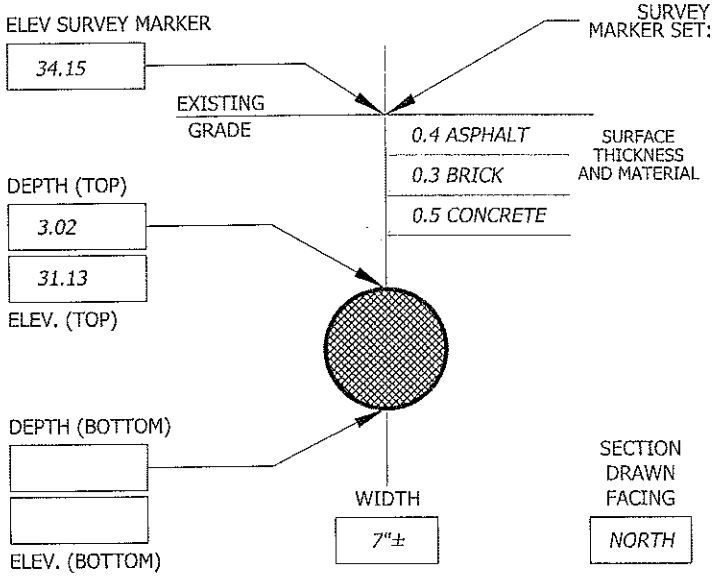

CONTROL POINTS PROVIDED BY: WHITMAN REQUARDT AND ASSOCIATES, LLP

105	N= -2202.90	E= 4545.83	ELEV= 27.43
106	N= -1748.30	E= 4524.82	ELEV= 32.27

A/I/DATA MARKER:	NORTHING	EASTING	ELEVATION
	-470.86	4457.68	34.15

NOTES:

TEST HOLE DATA PRODUCED BY:
ACCURATE INFRASTRUCTURE DATA, INC.
1100 BATAVIA FARM ROAD, SUITE 200, BALTIMORE, MD 21237
PH: 410-686-5091 FAX: 410-686-5093
ALL MEASUREMENTS ARE SHOWN IN DECIMAL FEET EXCEPT WHERE NOTED

PLAN VIEW OF TEST HOLE

DIMENSIONS GOVERN; DO NOT SCALE

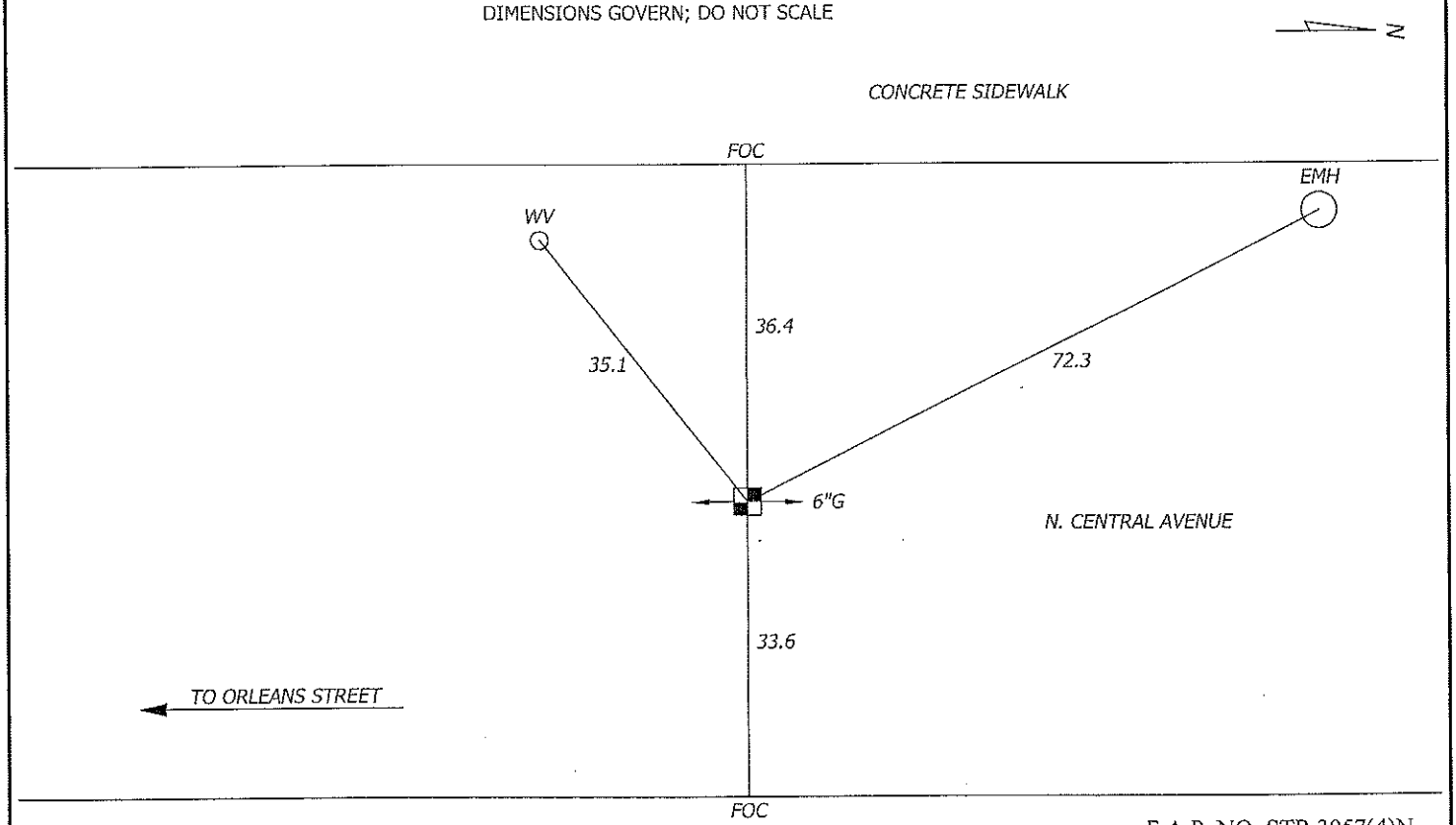

F.A.P. NO. STP-3057(4)N
SHA CONTRACT NO: BC320-001-815
BALTIMORE CITY CONTRACT NO. TR08310

A / I / DATA - TEST HOLE DATA SHEET

JOB #: 09134 TEST HOLE # : B29

PROJECT NAME:	CENTRAL AVENUE	EXCAVATION BY: A/I/DATA	DATE DUG: 12/22/09
PROJECT LOCATION:	BALTIMORE CITY, MARYLAND	FORM BY: RRB ASSISTED BY: JMK, CRB	CHECKED BY: SEW
CLIENT NAME:	WHITMAN REQUARDT AND ASSOCIATES, LLP	PAVING CONDITION:	FAIR
UTILITY REQUESTED:	STEAM CONDENSATE	GENERAL SOIL CONDITIONS:	FLOW ASH
UTILITY FOUND:	CAST IRON STEAM CONDENSATE	UTILITY CONDITION:	GOOD
		MARKER SURVEYED BY:	A/I/DATA

SECTION VIEW OF TEST HOLE

NOT TO SCALE

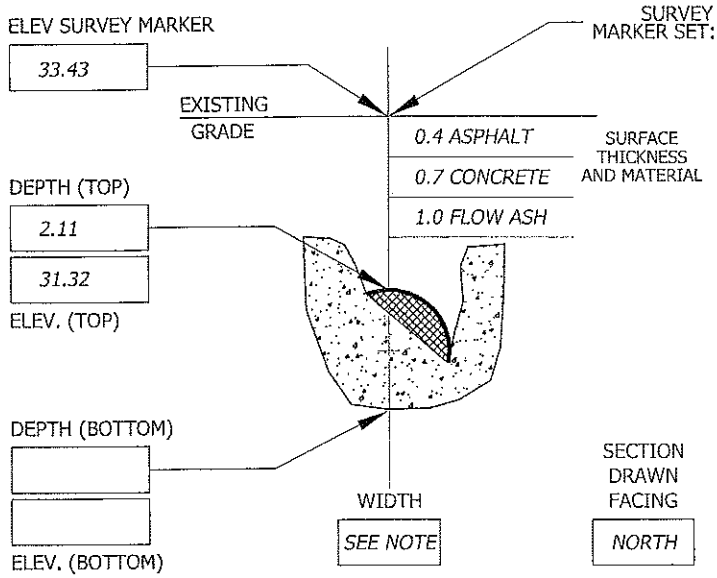

SURVEY MARKER SET: PK NAIL ABOVE: SEE NOTE OF UTILITY MARKING TAPE INSTALLED: YELLOW

CONTROL POINTS PROVIDED BY: WHITMAN REQUARDT AND ASSOCIATES, LLP

105	N= -2202.90	E= 4545.83	ELEV= 27.43
106	N= -1748.30	E= 4524.82	ELEV= 32.27

A/I/DATA MARKER:	NORTHING	EASTING	ELEVATION
	-483.31	4488.51	33.43

NOTES:
TEST HOLE REVEALED REQUESTED PIPE EMBEDDED IN FLOW ASH. UNABLE TO EXPOSE ENTIRE PIPE TO OBTAIN SIZE. PK NAIL SET OVER APPROXIMATE CROWN OF PIPE.

TEST HOLE DATA PRODUCED BY:
ACCURATE INFRASTRUCTURE DATA, INC.
1100 BATAVIA FARM ROAD, SUITE 200, BALTIMORE, MD 21237
PH: 410-686-5091 FAX: 410-686-5093
ALL MEASUREMENTS ARE SHOWN IN DECIMAL FEET EXCEPT WHERE NOTED

PLAN VIEW OF TEST HOLE

DIMENSIONS GOVERN; DO NOT SCALE

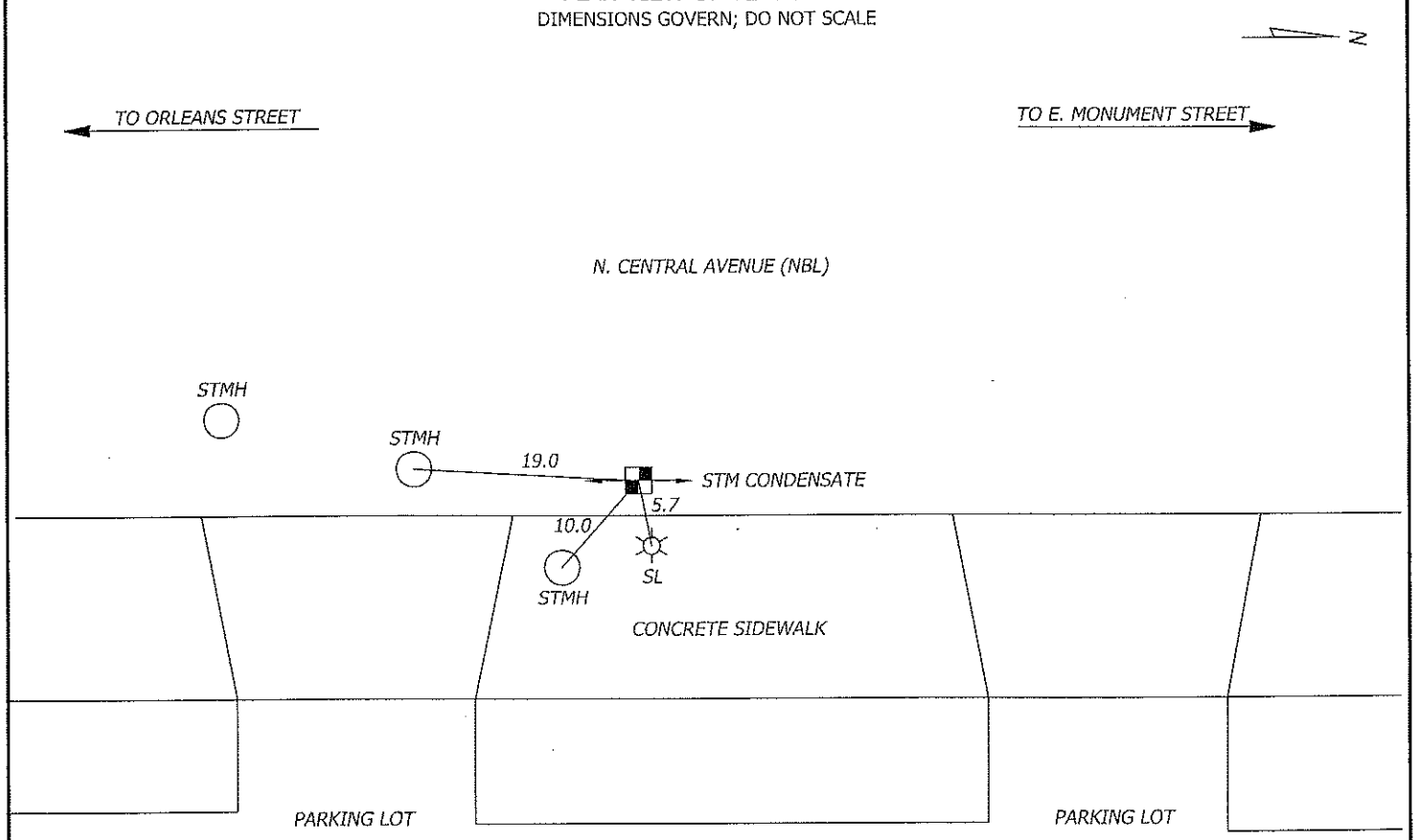

F.A.P. NO. STP-3057(4)N
SHA CONTRACT NO: BC320-001-815
BALTIMORE CITY CONTRACT NO. TR08310

A / I / DATA - TEST HOLE DATA SHEET

JOB #: 09134 TEST HOLE # : B30

PROJECT NAME:	CENTRAL AVENUE	EXCAVATION BY: A/I/DATA	DATE DUG: 12/22/09
PROJECT LOCATION:	BALTIMORE CITY, MARYLAND	FORM BY: RMS ASSISTED BY: JPW, MDI, MCG	CHECKED BY: SEW
CLIENT NAME:	WHITMAN REQUARDT AND ASSOCIATES, LLP	PAVING CONDITION:	GOOD
UTILITY REQUESTED:	16" STEAM & 24" CONDENSATE	GENERAL SOIL CONDITIONS:	HARD DRY ROCKY
UTILITY FOUND:	NO UTILITY FOUND	UTILITY CONDITION:	SEE NOTE
		MARKER SURVEYED BY:	A/I/DATA

SECTION VIEW OF TEST HOLE

NOT TO SCALE

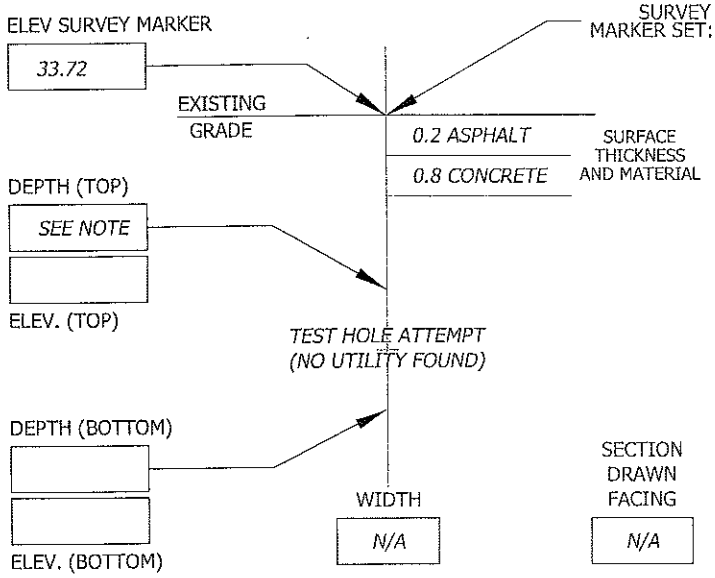

CONTROL POINTS PROVIDED BY: WHITMAN REQUARDT AND ASSOCIATES, LLP

105	N= -2202.90	E= 4545.83	ELEV= 27.43
106	N= -1748.30	E= 4524.82	ELEV= 32.27

A/I/DATA MARKER:	NORTHING	EASTING	ELEVATION
	-464.91	4485.29	33.72

NOTES:
TEST HOLE PERFORMED AT REQUESTED LOCATION AND ENCOUNTERED FLOW ASH AT A DEPTH OF 4.9'±. UNABLE TO CONTINUE EXCAVATING. PK NAIL SET OVER STRONGEST ELECTRONIC SIGNAL.

TEST HOLE DATA PRODUCED BY:
ACCURATE INFRASTRUCTURE DATA, INC.
1100 BATAVIA FARM ROAD, SUITE 200, BALTIMORE, MD 21237
PH: 410-686-5091 FAX: 410-686-5093
ALL MEASUREMENTS ARE SHOWN IN DECIMAL FEET EXCEPT WHERE NOTED

PLAN VIEW OF TEST HOLE

DIMENSIONS GOVERN; DO NOT SCALE

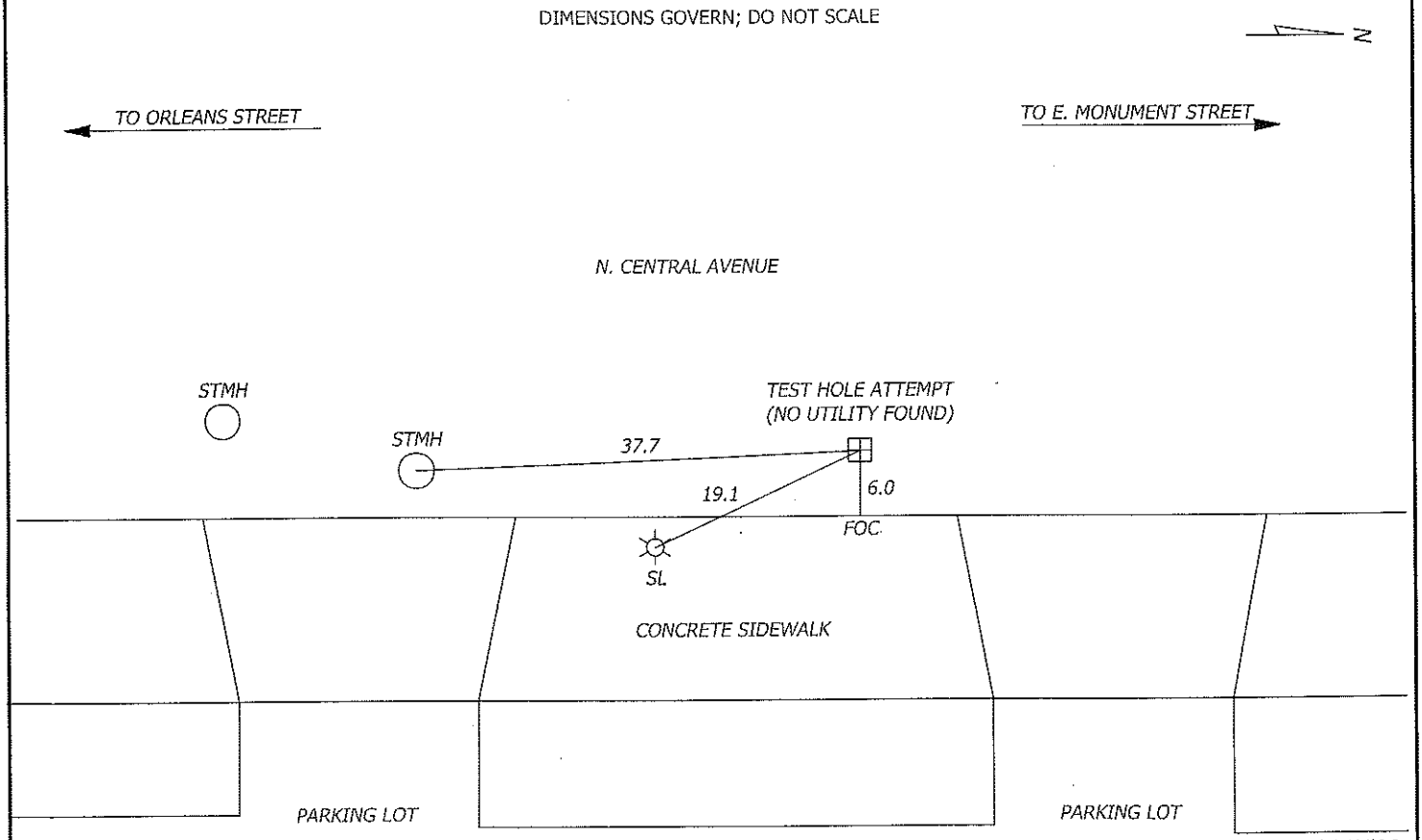

F.A.P. NO. STP-3057(4)N
SHA CONTRACT NO: BC320-001-815
BALTIMORE CITY CONTRACT NO. TR08310

A / I / DATA - TEST HOLE DATA SHEET

JOB #: 09134 TEST HOLE # : B31

PROJECT NAME:	CENTRAL AVENUE	EXCAVATION BY: A/I/DATA	DATE DUG: 12/22/09
PROJECT LOCATION:	BALTIMORE CITY, MARYLAND	FORM BY: RMS ASSISTED BY: JPW, MCG, MDI	CHECKED BY: SEW
CLIENT NAME:	WHITMAN REQUARDT AND ASSOCIATES, LLP	PAVING CONDITION:	GOOD
UTILITY REQUESTED:	16" STEAM & 24" CONDENSATE	GENERAL SOIL CONDITIONS:	SOFT MOIST SAND CLAY
UTILITY FOUND:	NO UTILITY FOUND	UTILITY CONDITION:	SEE NOTE
		MARKER SURVEYED BY:	A/I/DATA

SECTION VIEW OF TEST HOLE

NOT TO SCALE

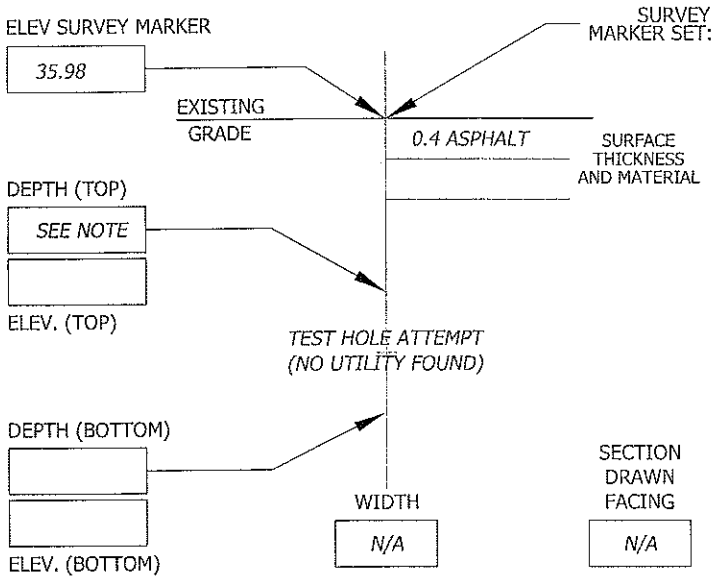

SURVEY MARKER SET: PK NAIL ABOVE: N/A OF UTILITY MARKING TAPE INSTALLED: WHITE

CONTROL POINTS PROVIDED BY: WHITMAN REQUARDT AND ASSOCIATES, LLP

105	N= -2202.90	E= 4545.83	ELEV= 27.43
106	N= -1748.30	E= 4524.82	ELEV= 32.27

A/I/DATA MARKER:	NORTHING	EASTING	ELEVATION
	-152.80	4470.78	35.98

NOTES:
TEST HOLE PERFORMED AT REQUESTED LOCATION AND ENCOUNTERED FLOW ASH AT A DEPTH OF 0.8'±. UNABLE TO CONTINUE EXCAVATING. PK NAIL SET OVER STRONGEST ELECTRONIC SIGNAL.

TEST HOLE DATA PRODUCED BY:
ACCURATE INFRASTRUCTURE DATA, INC.
1100 BATAVIA FARM ROAD, SUITE 200, BALTIMORE, MD 21237
PH: 410-686-5091 FAX: 410-686-5093
ALL MEASUREMENTS ARE SHOWN IN DECIMAL FEET EXCEPT WHERE NOTED

PLAN VIEW OF TEST HOLE

DIMENSIONS GOVERN; DO NOT SCALE

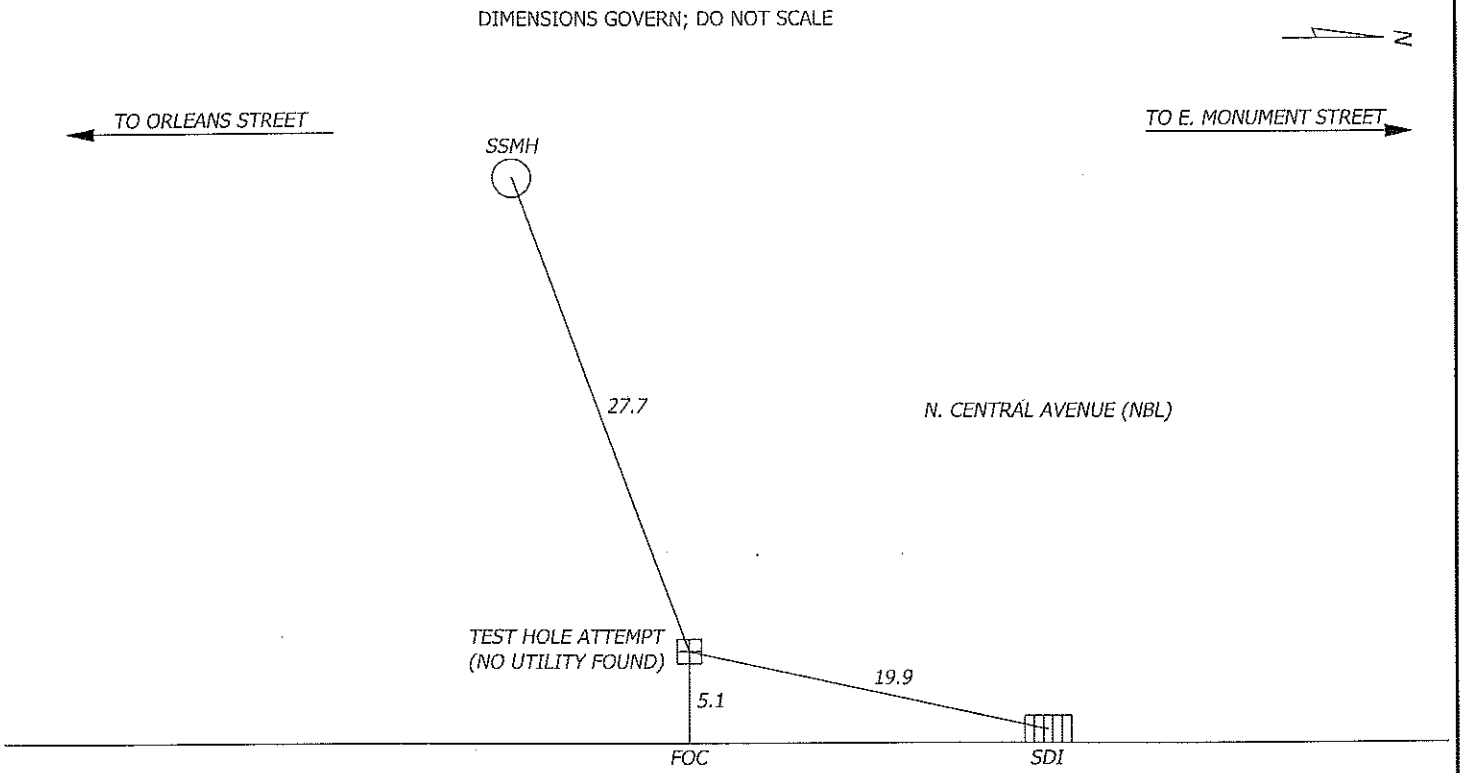

F.A.P. NO. STP-3057(4)N
SHA CONTRACT NO: BC320-001-815
BALTIMORE CITY CONTRACT NO. TR08310

A / I / DATA - TEST HOLE DATA SHEET

JOB #: 09134 TEST HOLE # : B32

PROJECT NAME:	CENTRAL AVENUE	EXCAVATION BY: A/I/DATA	DATE DUG: 12/14/09
PROJECT LOCATION:	BALTIMORE CITY, MARYLAND	FORM BY: RRB ASSISTED BY: TDL, CRB	CHECKED BY: SEW
CLIENT NAME:	WHITMAN REQUARDT AND ASSOCIATES, LLP	PAVING CONDITION:	FAIR
UTILITY REQUESTED:	ELECTRIC	GENERAL SOIL CONDITIONS:	SOFT WET CLAY
UTILITY FOUND:	CLAY ELECTRIC DUCT	UTILITY CONDITION:	GOOD
		MARKER SURVEYED BY:	A/I/DATA

SECTION VIEW OF TEST HOLE

NOT TO SCALE

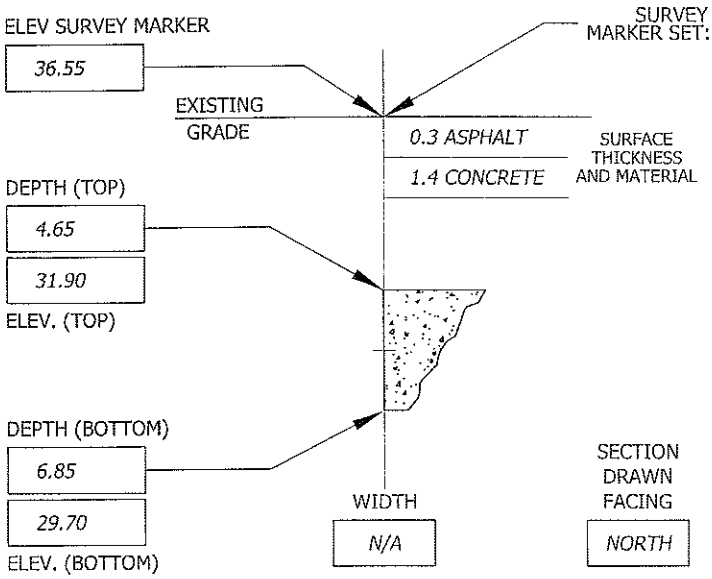

SURVEY MARKER SET: PK NAIL ABOVE: EDGE OF UTILITY MARKING TAPE INSTALLED: RED

CONTROL POINTS PROVIDED BY: WHITMAN REQUARDT AND ASSOCIATES, LLP

105	N= -2202.90	E= 4545.83	ELEV= 27.43
106	N= -1748.30	E= 4524.82	ELEV= 32.27

A/I/DATA MARKER:	NORTHING	EASTING	ELEVATION
	-109.85	4407.83	36.55

NOTES:

TEST HOLE DATA PRODUCED BY:
ACCURATE INFRASTRUCTURE DATA, INC.
1100 BATAVIA FARM ROAD, SUITE 200, BALTIMORE, MD 21237
PH: 410-686-5091 FAX: 410-686-5093
ALL MEASUREMENTS ARE SHOWN IN DECIMAL FEET EXCEPT WHERE NOTED

PLAN VIEW OF TEST HOLE

DIMENSIONS GOVERN; DO NOT SCALE

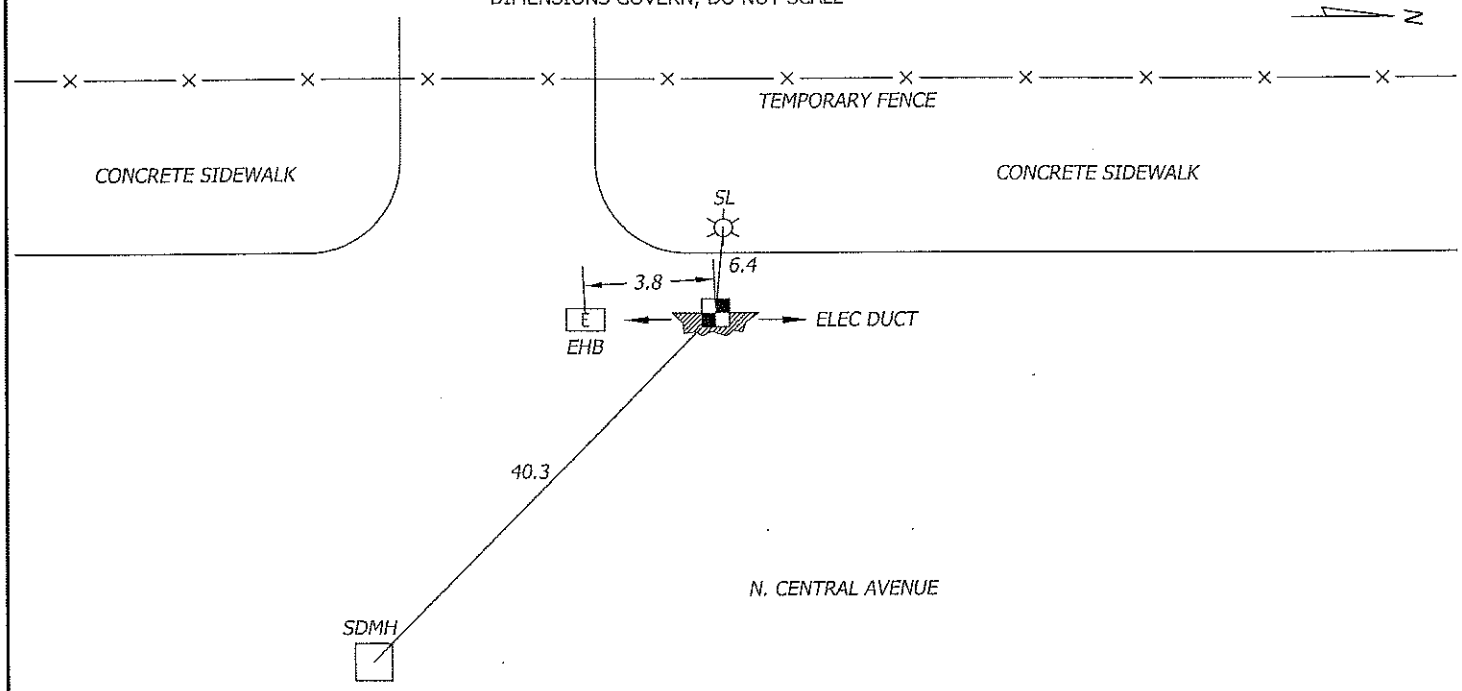

F.A.P. NO. STP-3057(4)N
SHA CONTRACT NO: BC320-001-815
BALTIMORE CITY CONTRACT NO. TR08310

A / I / DATA - TEST HOLE DATA SHEET

JOB #: 09134 TEST HOLE # : B33

PROJECT NAME:	CENTRAL AVENUE	EXCAVATION BY: A/I/DATA	DATE DUG: 12/14/09
PROJECT LOCATION:	BALTIMORE CITY, MARYLAND	FORM BY: RRB ASSISTED BY: TDL, CRB	CHECKED BY: SEW
CLIENT NAME:	WHITMAN REQUARDT AND ASSOCIATES, LLP	PAVING CONDITION:	FAIR
UTILITY REQUESTED:	16" WATER	GENERAL SOIL CONDITIONS:	SOFT MOIST SAND
UTILITY FOUND:	16" WATER (SEE NOTE)	UTILITY CONDITION:	POOR (SEE NOTE)
		MARKER SURVEYED BY:	A/I/DATA

SECTION VIEW OF TEST HOLE

NOT TO SCALE

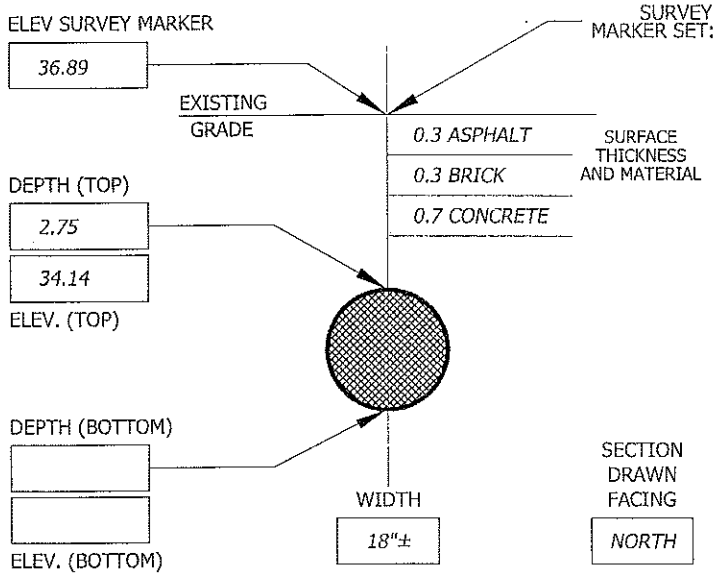

SURVEY MARKER SET: PK NAIL ABOVE: CROWN OF UTILITY MARKING TAPE INSTALLED: BLUE

CONTROL POINTS PROVIDED BY: WHITMAN REQUARDT AND ASSOCIATES, LLP

105	N= -2202.90	E= 4545.83	ELEV= 27.43
106	N= -1748.30	E= 4524.82	ELEV= 32.27

A/I/DATA MARKER:	NORTHING	EASTING	ELEVATION
	-111.22	4413.89	36.89

NOTES:
UNABLE TO OBTAIN MATERIAL DUE TO CORROSION ON PIPE.

TEST HOLE DATA PRODUCED BY:
ACCURATE INFRASTRUCTURE DATA, INC.
1100 BATAVIA FARM ROAD, SUITE 200, BALTIMORE, MD 21237
PH: 410-686-5091 FAX: 410-686-5093
ALL MEASUREMENTS ARE SHOWN IN DECIMAL FEET EXCEPT WHERE NOTED

PLAN VIEW OF TEST HOLE

DIMENSIONS GOVERN; DO NOT SCALE

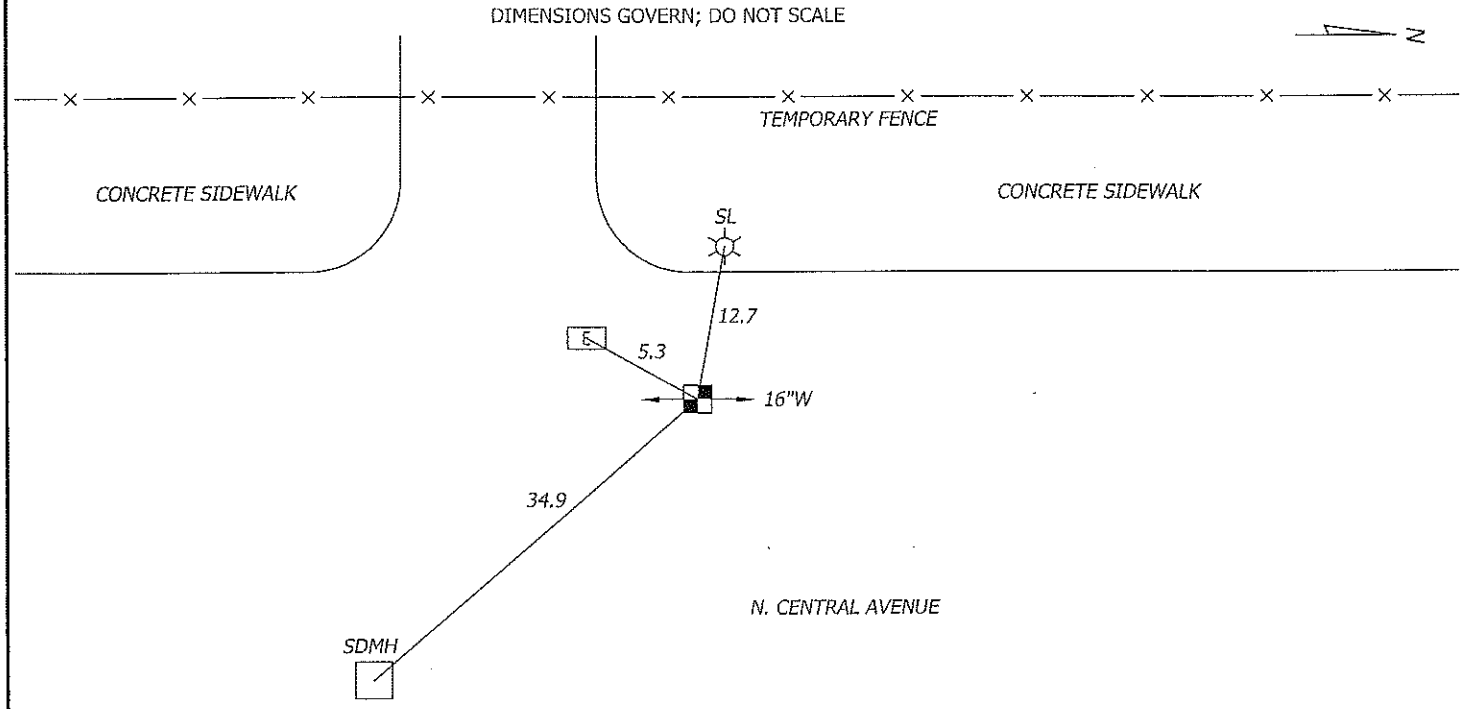

F.A.P. NO. STP-3057(4)N
SHA CONTRACT NO: BC320-001-815
BALTIMORE CITY CONTRACT NO. TR08310

A / I / DATA - TEST HOLE DATA SHEET

JOB #: 09134 TEST HOLE # : B34

PROJECT NAME:	CENTRAL AVENUE	EXCAVATION BY: A/I/DATA	DATE DUG: 01/05/10
PROJECT LOCATION:	BALTIMORE CITY, MARYLAND	FORM BY: KLS ASSISTED BY: RMS, MCG	CHECKED BY: SEW
CLIENT NAME:	WHITMAN REQUARDT AND ASSOCIATES, LLP	PAVING CONDITION:	GOOD
UTILITY REQUESTED:	ELECTRIC	GENERAL SOIL CONDITIONS:	SOFT MOIST SAND CLAY
UTILITY FOUND:	PRECAST CLAY TILE ELECTRIC DUCT	UTILITY CONDITION:	GOOD
		MARKER SURVEYED BY:	A/I/DATA

SECTION VIEW OF TEST HOLE

NOT TO SCALE

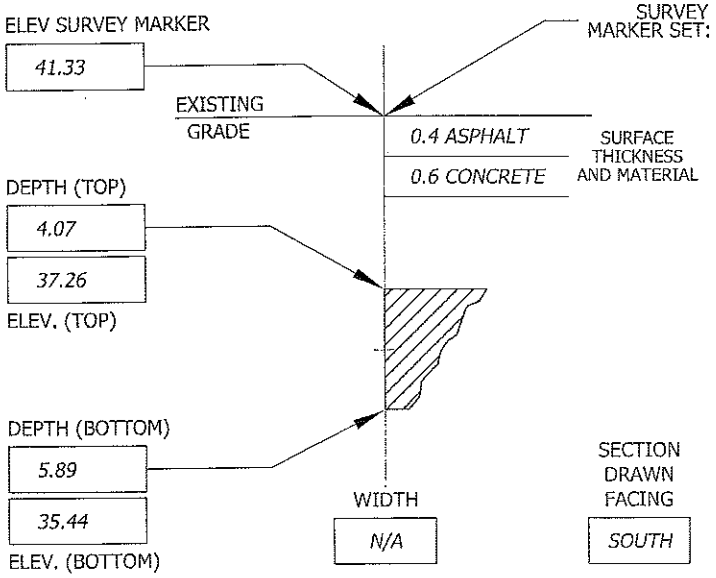

SURVEY MARKER SET: PK NAIL ABOVE: EDGE OF UTILITY MARKING TAPE INSTALLED: RED

CONTROL POINTS PROVIDED BY: WHITMAN REQUARDT AND ASSOCIATES, LLP

105	N= -2202.90	E= 4545.83	ELEV= 27.43
106	N= -1748.30	E= 4524.82	ELEV= 32.27

A/I/DATA MARKER:	NORTHING	EASTING	ELEVATION
	202.49	4389.07	41.33

NOTES:
PK NAIL SET OVER EAST EDGE OF DUCT.

TEST HOLE DATA PRODUCED BY:
ACCURATE INFRASTRUCTURE DATA, INC.
1100 BATAVIA FARM ROAD, SUITE 200, BALTIMORE, MD 21237
PH: 410-686-5091 FAX: 410-686-5093
ALL MEASUREMENTS ARE SHOWN IN DECIMAL FEET EXCEPT WHERE NOTED

PLAN VIEW OF TEST HOLE

DIMENSIONS GOVERN; DO NOT SCALE

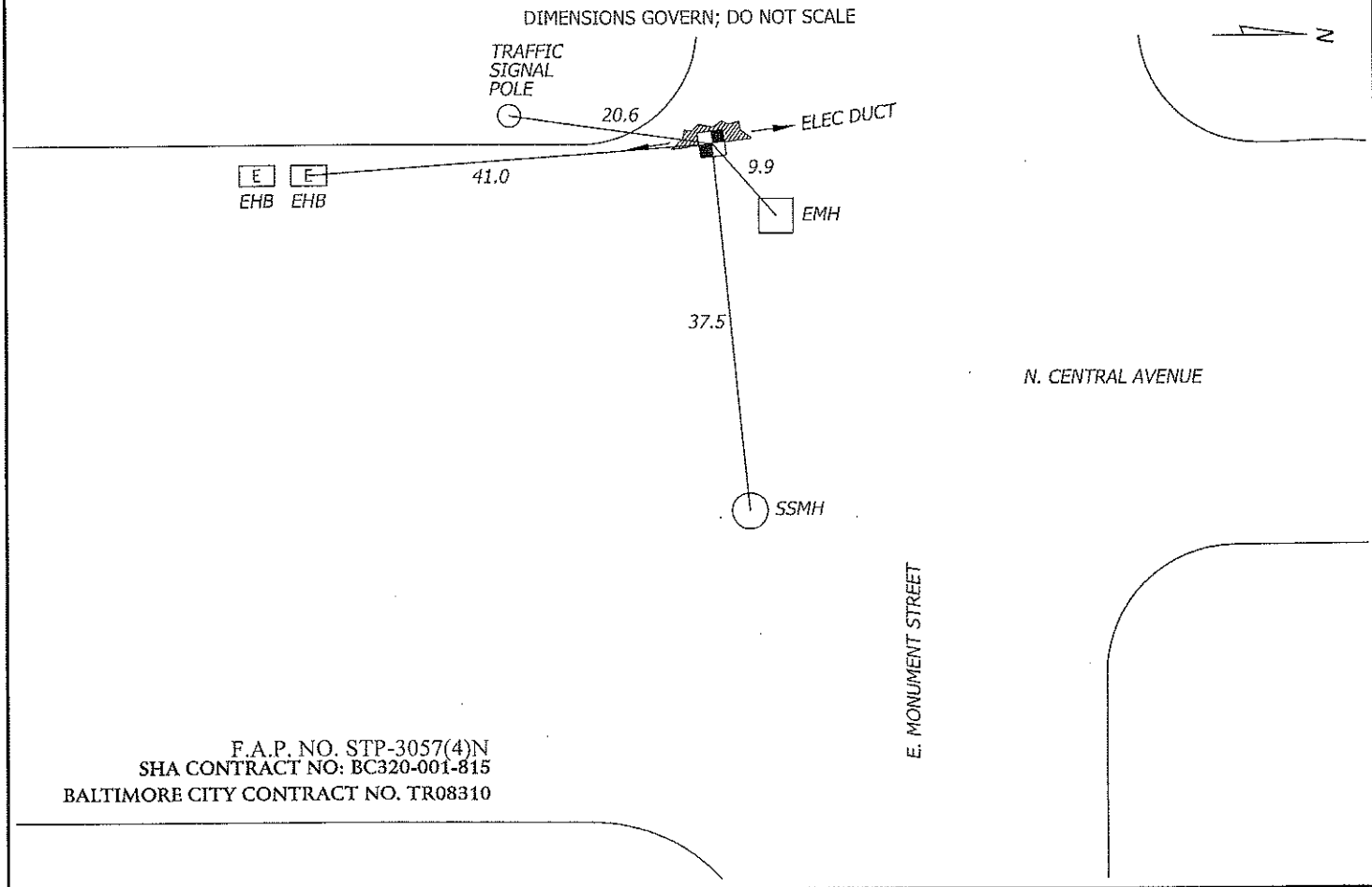

F.A.P. NO. STP-3057(4)N
SHA CONTRACT NO: BC320-001-815
BALTIMORE CITY CONTRACT NO. TR08310

A / I / DATA - TEST HOLE DATA SHEET

JOB #: 09134 TEST HOLE # : B35

PROJECT NAME:	CENTRAL AVENUE	EXCAVATION BY: A/I/DATA	DATE DUG: 12/29/09
PROJECT LOCATION:	BALTIMORE CITY, MARYLAND	FORM BY: RMS ASSISTED BY: MCG, JPW, MDI	CHECKED BY: SEW
CLIENT NAME:	WHITMAN REQUARDT AND ASSOCIATES, LLP	PAVING CONDITION:	GOOD
UTILITY REQUESTED:	16" WATER	GENERAL SOIL CONDITIONS:	SOFT MOIST CLAY ROCKY
UTILITY FOUND:	16" CAST IRON WATER	UTILITY CONDITION:	GOOD
		MARKER SURVEYED BY:	A/I/DATA

SECTION VIEW OF TEST HOLE

NOT TO SCALE

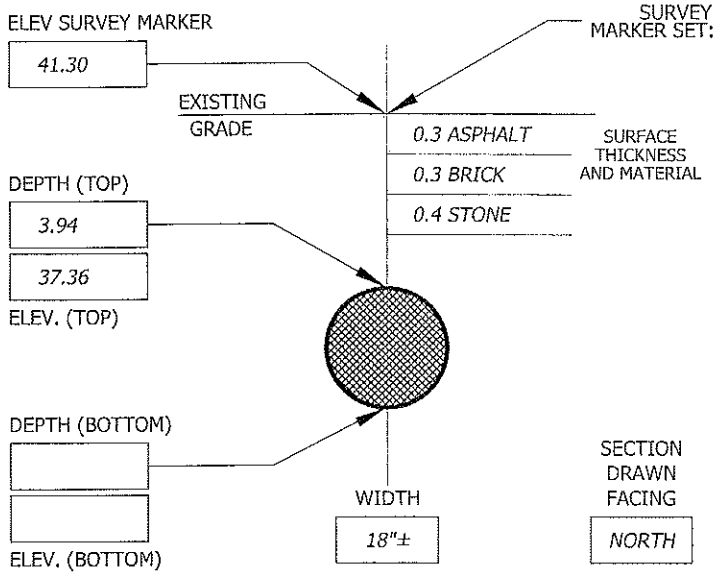

SURVEY MARKER SET: PK NAIL ABOVE: CROWN OF UTILITY MARKING TAPE INSTALLED: BLUE

CONTROL POINTS PROVIDED BY: WHITMAN REQUARDT AND ASSOCIATES, LLP

105	N= -2202.90	E= 4545.83	ELEV= 27.43
106	N= -1748.30	E= 4524.82	ELEV= 32.27

A/I/DATA MARKER:	NORTHING	EASTING	ELEVATION
	202.65	4399.83	41.30

NOTES:

TEST HOLE DATA PRODUCED BY:
ACCURATE INFRASTRUCTURE DATA, INC.
1100 BATAVIA FARM ROAD, SUITE 200, BALTIMORE, MD 21237
PH: 410-686-5091 FAX: 410-686-5093
ALL MEASUREMENTS ARE SHOWN IN DECIMAL FEET EXCEPT WHERE NOTED

PLAN VIEW OF TEST HOLE

DIMENSIONS GOVERN; DO NOT SCALE

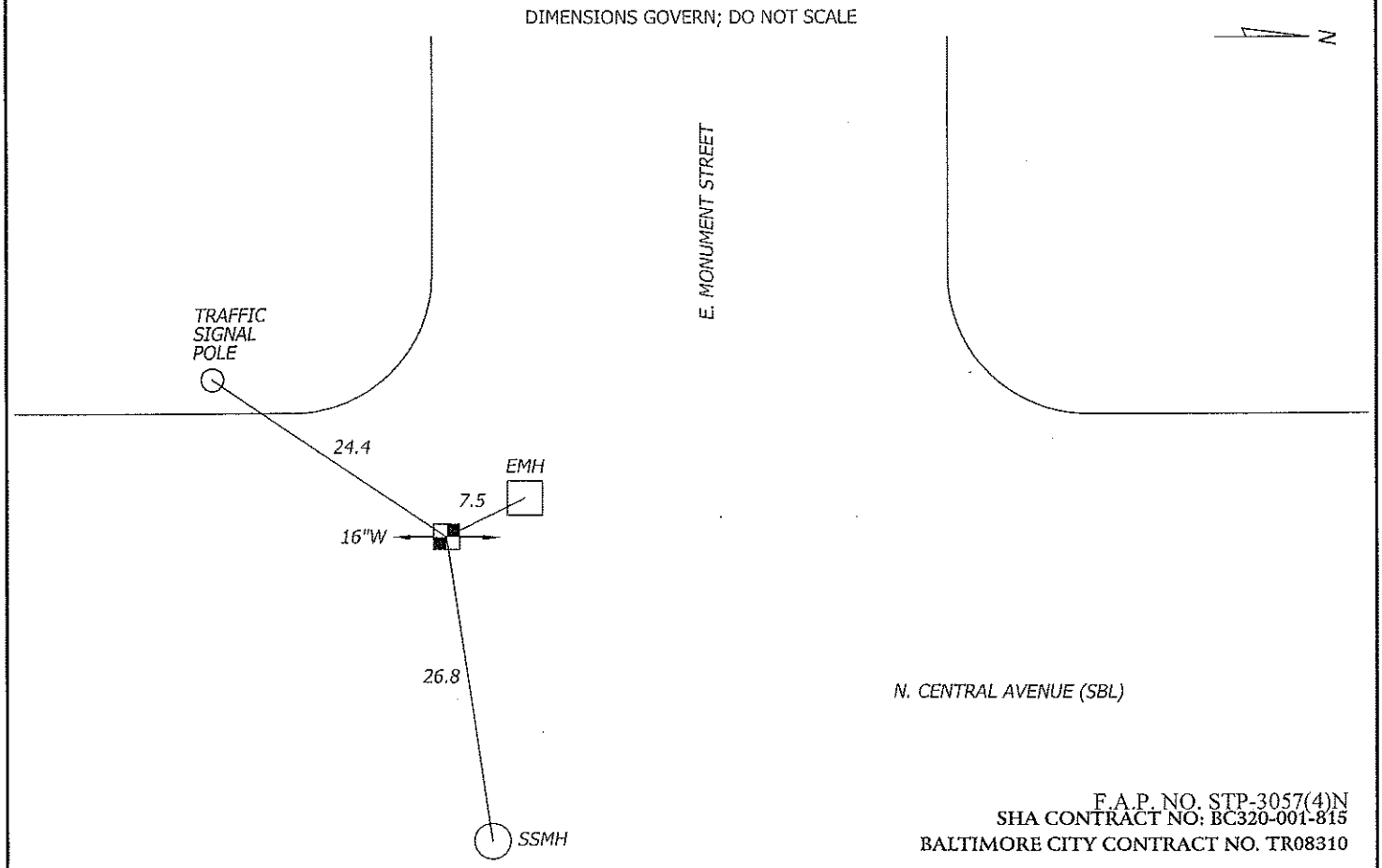

F.A.P. NO. STP-3057(4)N
SHA CONTRACT NO: BC320-001-815
BALTIMORE CITY CONTRACT NO. TR08310

A / I / DATA - TEST HOLE DATA SHEET

JOB #: 09134 TEST HOLE # : B36

PROJECT NAME:	CENTRAL AVENUE	EXCAVATION BY: A/I/DATA	DATE DUG: 01/04/10
PROJECT LOCATION:	BALTIMORE CITY, MARYLAND	FORM BY: RRB ASSISTED BY: JPW, KLS	CHECKED BY: SEW
CLIENT NAME:	WHITMAN REQUARDT AND ASSOCIATES, LLP	PAVING CONDITION:	FAIR
UTILITY REQUESTED:	12" STEAM & 20" CONDENSATE	GENERAL SOIL CONDITIONS:	SOFT HARD MOIST DRY CLAY ROCKY
UTILITY FOUND:	NO UTILITY FOUND	UTILITY CONDITION:	N/A
		MARKER SURVEYED BY:	A/I/DATA

SECTION VIEW OF TEST HOLE

NOT TO SCALE

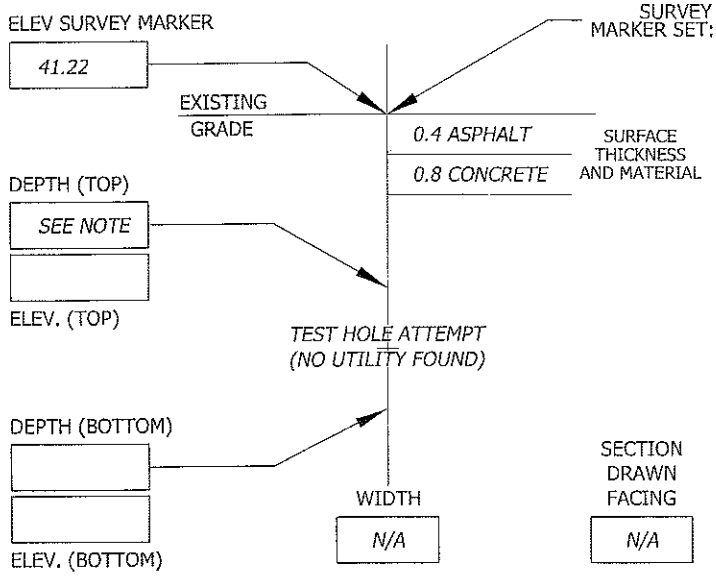

SURVEY MARKER SET: SEE NOTE ABOVE: N/A OF UTILITY MARKING TAPE INSTALLED: N/A

CONTROL POINTS PROVIDED BY: WHITMAN REQUARDT AND ASSOCIATES, LLP

105	N= -2202.90	E= 4545.83	ELEV= 27.43
106	N= -1748.30	E= 4524.82	ELEV= 32.27

A/I/DATA MARKER:	NORTHING	EASTING	ELEVATION
	197.54	4418.76	41.22

NOTES:
TEST HOLE PERFORMED AT REQUESTED LOCATION TO A DEPTH OF 8.5'±. NO UTILITY FOUND. NO SURVEY MARKER SET. ALL TIES AND SURVEY TAKEN TO CENTER OF HOLE.

TEST HOLE DATA PRODUCED BY:
ACCURATE INFRASTRUCTURE DATA, INC.
1100 BATAVIA FARM ROAD, SUITE 200, BALTIMORE, MD 21237
PH: 410-686-5091 FAX: 410-686-5093
ALL MEASUREMENTS ARE SHOWN IN DECIMAL FEET EXCEPT WHERE NOTED

PLAN VIEW OF TEST HOLE

DIMENSIONS GOVERN; DO NOT SCALE

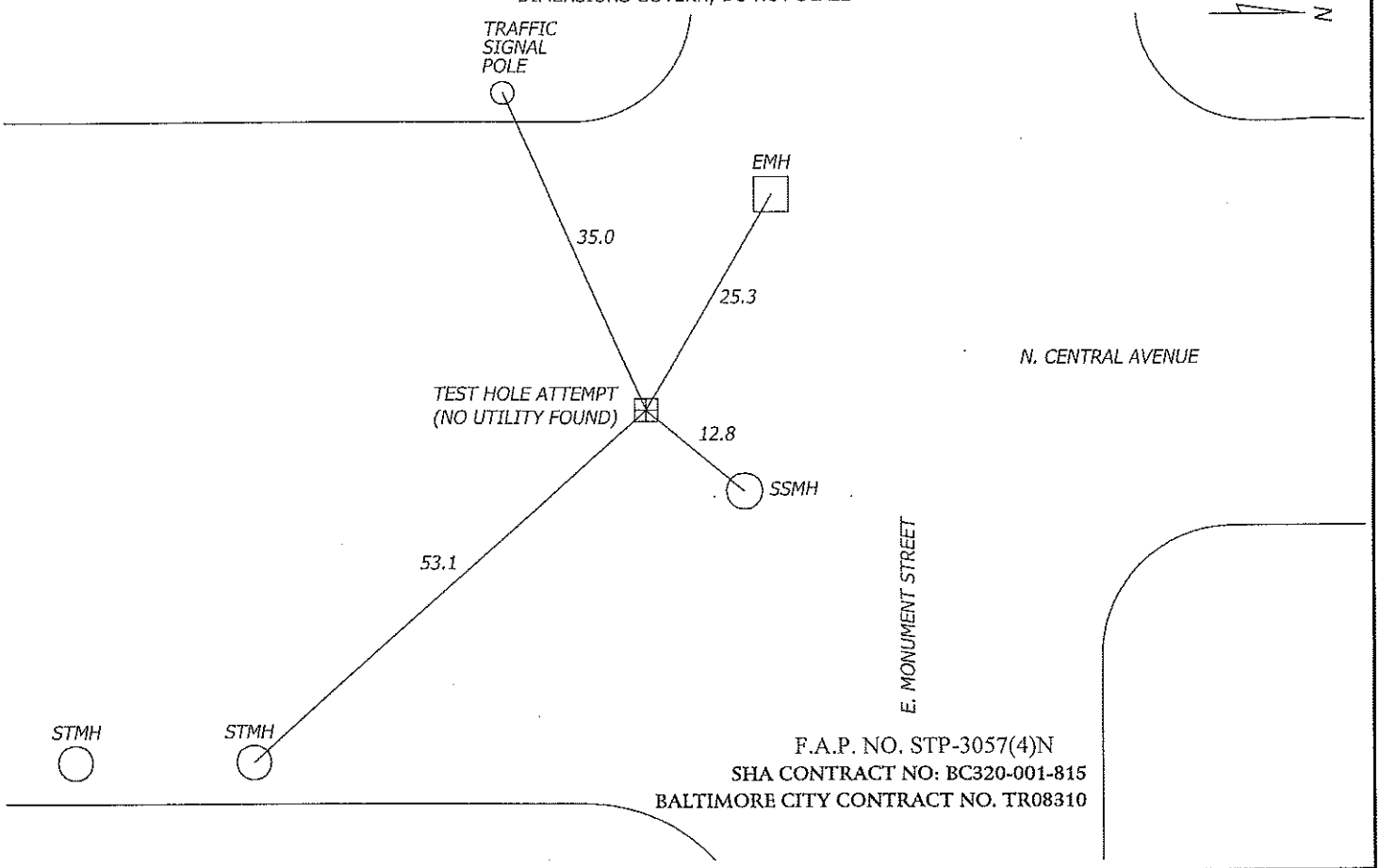

F.A.P. NO. STP-3057(4)N
SHA CONTRACT NO: BC320-001-815
BALTIMORE CITY CONTRACT NO. TR08310

A / I / DATA - TEST HOLE DATA SHEET

JOB #: 09134 TEST HOLE # : B37

PROJECT NAME:	CENTRAL AVENUE	EXCAVATION BY: A/I/DATA	DATE DUG: 12/29/09
PROJECT LOCATION:	BALTIMORE CITY, MARYLAND	FORM BY: RMS ASSISTED BY: MCG, MCG, MDI	CHECKED BY: SEW
CLIENT NAME:	WHITMAN REQUARDT AND ASSOCIATES, LLP	PAVING CONDITION:	GOOD
UTILITY REQUESTED:	ELECTRIC	GENERAL SOIL CONDITIONS:	SOFT MOIST CLAY ROCKY
UTILITY FOUND:	NO UTILITY FOUND	UTILITY CONDITION:	SEE NOTE
		MARKER SURVEYED BY:	A/I/DATA

SECTION VIEW OF TEST HOLE

NOT TO SCALE

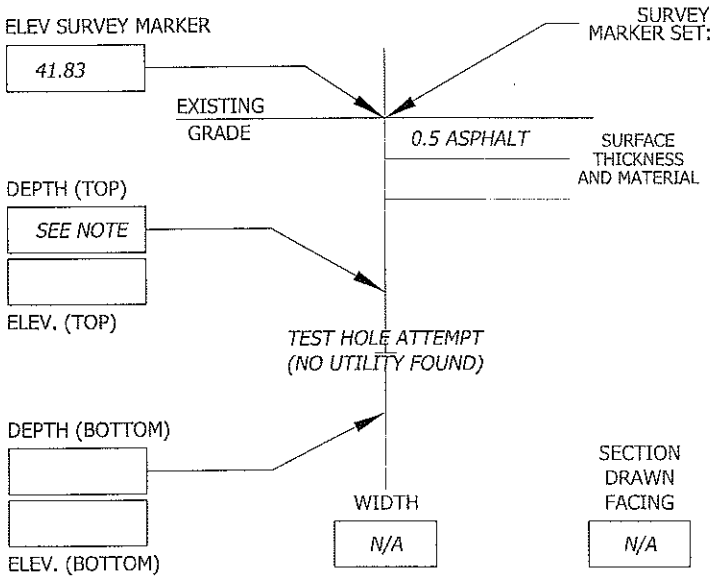

SURVEY MARKER SET: SEE NOTE ABOVE: N/A OF UTILITY MARKING TAPE INSTALLED: N/A

CONTROL POINTS PROVIDED BY: WHITMAN REQUARDT AND ASSOCIATES, LLP

105	N= -2202.90	E= 4545.83	ELEV= 27.43
106	N= -1748.30	E= 4524.82	ELEV= 32.27

A/I/DATA MARKER:	NORTHING	EASTING	ELEVATION
	267.41	4392.28	41.83

NOTES:
TEST HOLE PERFORMED AT REQUESTED LOCATION TO A DEPTH OF 8'± AND PROBED TO 9'±. NO UTILITY FOUND. NO SURVEY MARKER SET. ALL TIES AND SURVEY TAKEN TO CENTER OF HOLE.

TEST HOLE DATA PRODUCED BY:
ACCURATE INFRASTRUCTURE DATA, INC.
1100 BATAVIA FARM ROAD, SUITE 200, BALTIMORE, MD 21237
PH: 410-686-5091 FAX: 410-686-5093
ALL MEASUREMENTS ARE SHOWN IN DECIMAL FEET EXCEPT WHERE NOTED

PLAN VIEW OF TEST HOLE

DIMENSIONS GOVERN; DO NOT SCALE

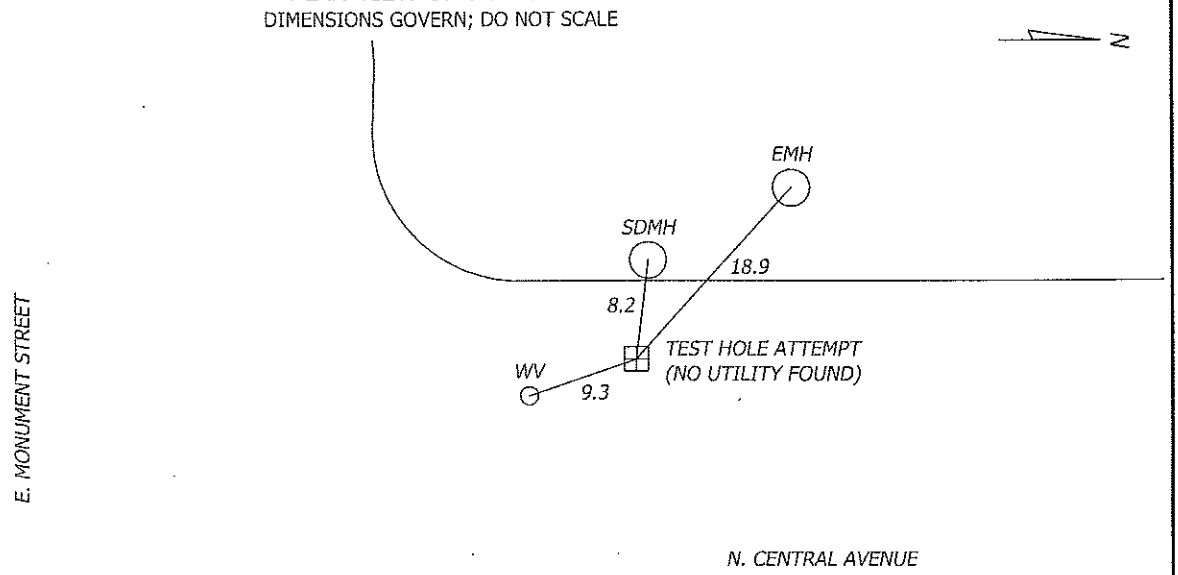

F.A.P. NO. STP-3057(4)N
SHA CONTRACT NO: BC320-001-815
BALTIMORE CITY CONTRACT NO. TR08310

A / I / DATA - TEST HOLE DATA SHEET

JOB #: 09134 TEST HOLE # : B38

PROJECT NAME:	CENTRAL AVENUE	EXCAVATION BY: A/I/DATA	DATE DUG: 12/23/09
PROJECT LOCATION:	BALTIMORE CITY, MARYLAND	FORM BY: RMS ASSISTED BY: MDI, JPW	CHECKED BY: SEW
CLIENT NAME:	WHITMAN REQUARDT AND ASSOCIATES, LLP	PAVING CONDITION:	GOOD
UTILITY REQUESTED:	16" WATER	GENERAL SOIL CONDITIONS:	SOFT MOIST SAND
UTILITY FOUND:	16" CAST IRON WATER	UTILITY CONDITION:	FAIR
		MARKER SURVEYED BY:	A/I/DATA

SECTION VIEW OF TEST HOLE

NOT TO SCALE

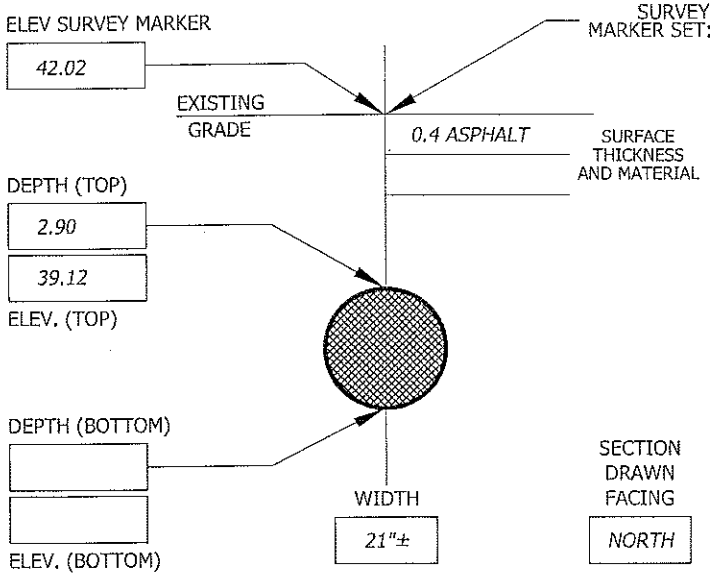

SURVEY MARKER SET: PK NAIL ABOVE: CROWN OF UTILITY MARKING TAPE INSTALLED: BLUE

CONTROL POINTS PROVIDED BY: WHITMAN REQUARDT AND ASSOCIATES, LLP

105	N= -2202.90	E= 4545.83	ELEV= 27.43
106	N= -1748.30	E= 4524.82	ELEV= 32.27

A/I/DATA MARKER:	NORTHING	EASTING	ELEVATION
	266.83	4397.10	42.02

NOTES:
TEST HOLE LOCATION MOVED 2' NORTH TO AVOID THE 18" STORM DRAIN.

TEST HOLE DATA PRODUCED BY:
ACCURATE INFRASTRUCTURE DATA, INC.
1100 BATAVIA FARM ROAD, SUITE 200, BALTIMORE, MD 21237
PH: 410-686-5091 FAX: 410-686-5093
ALL MEASUREMENTS ARE SHOWN IN DECIMAL FEET EXCEPT WHERE NOTED

PLAN VIEW OF TEST HOLE

DIMENSIONS GOVERN; DO NOT SCALE

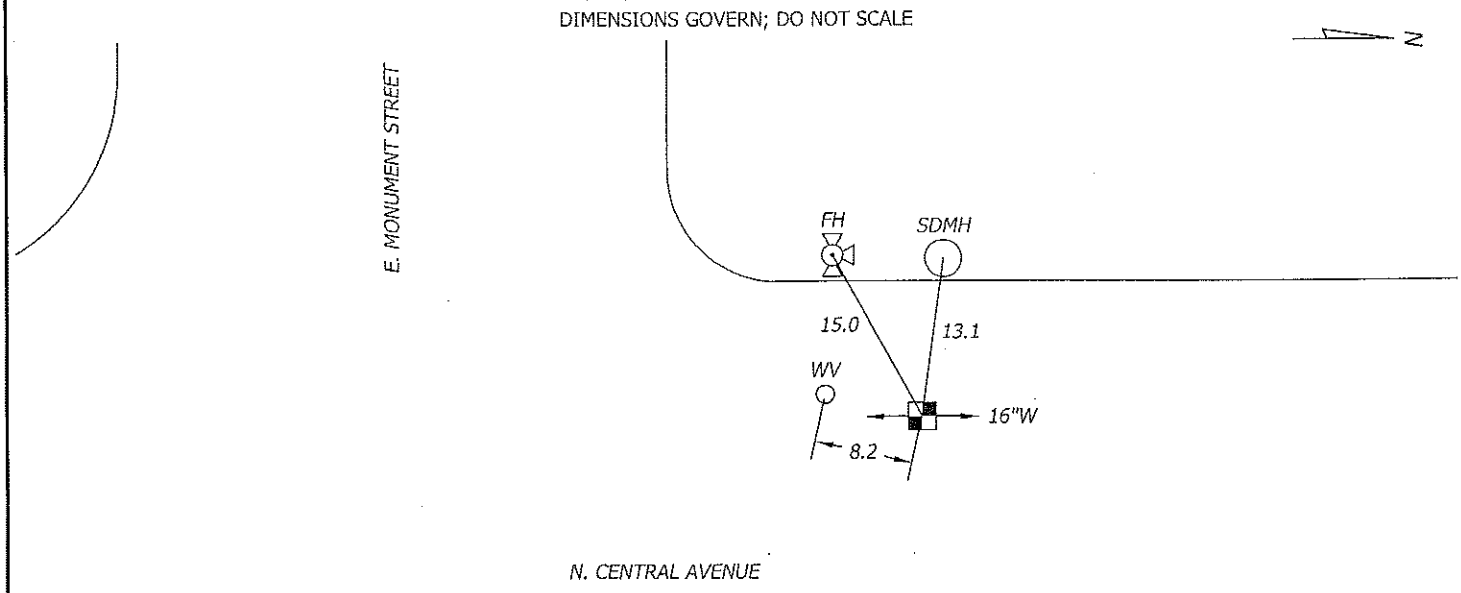

F.A.P. NO. STP-3057(4)N
SHA CONTRACT NO: BC320-001-815
BALTIMORE CITY CONTRACT NO. TR08310

A / I / DATA - TEST HOLE DATA SHEET

JOB #: 09134 TEST HOLE # : B39

PROJECT NAME:	CENTRAL AVENUE	EXCAVATION BY: A/I/DATA	DATE DUG: 12/29/09
PROJECT LOCATION:	BALTIMORE CITY, MARYLAND	FORM BY: RMS ASSISTED BY: MCG, MCG, MDI	CHECKED BY: SEW
CLIENT NAME:	WHITMAN REQUARDT AND ASSOCIATES, LLP	PAVING CONDITION:	GOOD
UTILITY REQUESTED:	STEAM	GENERAL SOIL CONDITIONS:	SOFT MOIST CLAY ROCKY
UTILITY FOUND:	NO UTILITY FOUND	UTILITY CONDITION:	SEE NOTE
		MARKER SURVEYED BY:	A/I/DATA

SECTION VIEW OF TEST HOLE
NOT TO SCALE

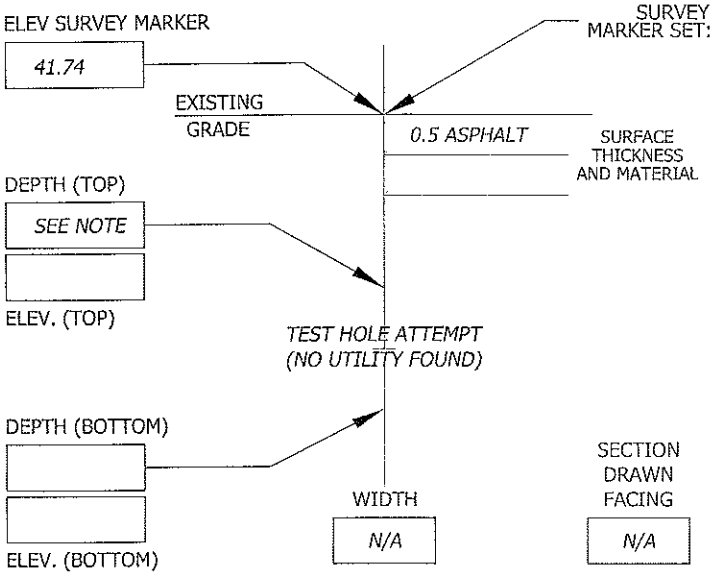

SURVEY MARKER SET: SEE NOTE ABOVE: N/A OF UTILITY MARKING TAPE INSTALLED: N/A

CONTROL POINTS PROVIDED BY: WHITMAN REQUARDT AND ASSOCIATES, LLP

105	N= -2202.90	E= 4545.83	ELEV= 27.43
106	N= -1748.30	E= 4524.82	ELEV= 32.27

A/I/DATA MARKER:	NORTHING	EASTING	ELEVATION
	275.24	4386.84	41.74

NOTES:
TEST HOLE PERFORMED AT REQUESTED LOCATION TO A DEPTH OF 8.4'± AND PROBED TO 9'±. NO UTILITY FOUND. NO SURVEY MARKER SET. ALL TIES AND SURVEY TAKEN TO CENTER OF HOLE.

TEST HOLE DATA PRODUCED BY:
ACCURATE INFRASTRUCTURE DATA, INC.
1100 BATAVIA FARM ROAD, SUITE 200, BALTIMORE, MD 21237
PH: 410-686-5091 FAX: 410-686-5093
ALL MEASUREMENTS ARE SHOWN IN DECIMAL FEET EXCEPT WHERE NOTED

PLAN VIEW OF TEST HOLE
DIMENSIONS GOVERN; DO NOT SCALE

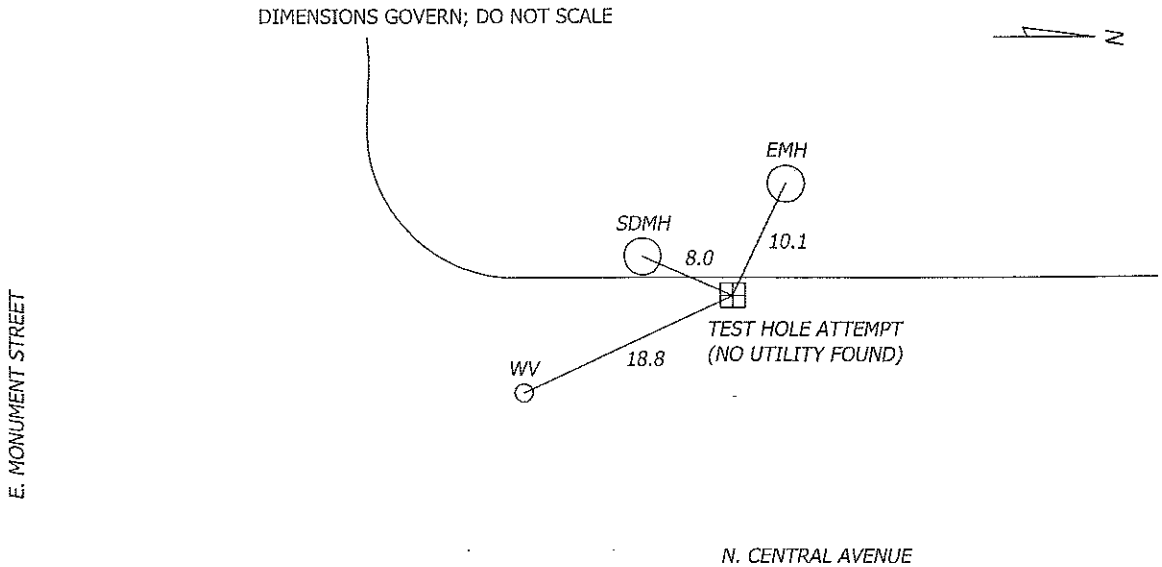

F.A.P. NO. STP-3057(4)N
SHA CONTRACT NO: BC320-001-815
BALTIMORE CITY CONTRACT NO. TR08310

A / I / DATA - TEST HOLE DATA SHEET

JOB #: 09134 TEST HOLE # : B40

PROJECT NAME:	CENTRAL AVENUE	EXCAVATION BY: A/I/DATA	DATE DUG: 12/29/09
PROJECT LOCATION:	BALTIMORE CITY, MARYLAND	FORM BY: RRB ASSISTED BY: GMC, JMK	CHECKED BY: SEW
CLIENT NAME:	WHITMAN REQUARDT AND ASSOCIATES, LLP	PAVING CONDITION:	FAIR
UTILITY REQUESTED:	STEAM	GENERAL SOIL CONDITIONS:	SOFT MOIST CLAY
UTILITY FOUND:	NO UTILITY FOUND	UTILITY CONDITION:	SEE NOTE
		MARKER SURVEYED BY:	A/I/DATA

SECTION VIEW OF TEST HOLE

NOT TO SCALE

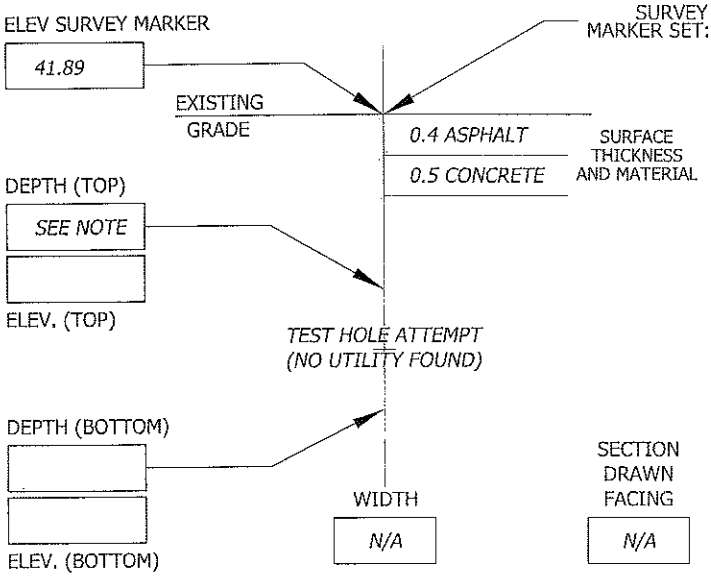

SURVEY MARKER SET: SEE NOTE ABOVE: N/A OF UTILITY MARKING TAPE INSTALLED: N/A

CONTROL POINTS PROVIDED BY: WHITMAN REQUARDT AND ASSOCIATES, LLP

105	N= -2202.90	E= 4545.83	ELEV= 27.43
106	N= -1748.30	E= 4524.82	ELEV= 32.27

A/I/DATA MARKER:	NORTHING	EASTING	ELEVATION
	277.25	4425.71	41.89

NOTES:
TEST HOLE PERFORMED AT REQUESTED LOCATION TO A DEPTH OF 3.5'± AND PROBED TO 6.5'±. NO UTILITY FOUND. NO SURVEY MARKER SET. ALL TIES AND SURVEY TAKEN TO CENTER OF HOLE.

TEST HOLE DATA PRODUCED BY:
ACCURATE INFRASTRUCTURE DATA, INC.
1100 BATAVIA FARM ROAD, SUITE 200, BALTIMORE, MD 21237
PH: 410-686-5091 FAX: 410-686-5093
ALL MEASUREMENTS ARE SHOWN IN DECIMAL FEET EXCEPT WHERE NOTED

PLAN VIEW OF TEST HOLE

DIMENSIONS GOVERN; DO NOT SCALE

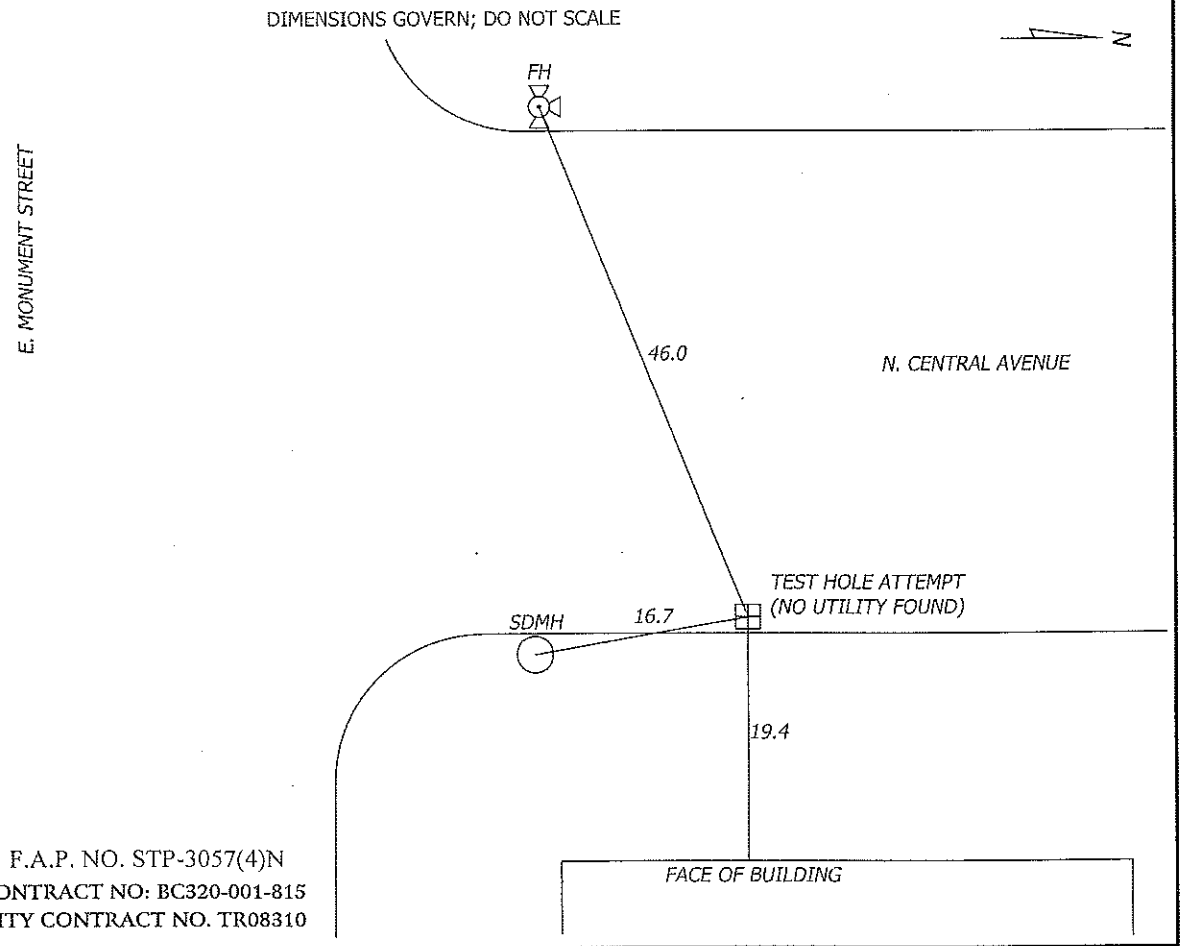

F.A.P. NO. STP-3057(4)N
SHA CONTRACT NO: BC320-001-815
BALTIMORE CITY CONTRACT NO. TR08310

A / I / DATA - TEST HOLE DATA SHEET

JOB #: 09134 TEST HOLE # : B41

PROJECT NAME:	CENTRAL AVENUE	EXCAVATION BY:	A/I/DATA	DATE DUG:	12/17/09
PROJECT LOCATION:	BALTIMORE CITY, MARYLAND	FORM BY: RRB	ASSISTED BY: TDL	CHECKED BY:	SEW
CLIENT NAME:	WHITMAN REQUARDT AND ASSOCIATES, LLP	PAVING CONDITION:	FAIR		
UTILITY REQUESTED:	8" WATER	GENERAL SOIL CONDITIONS:	SOFT MOIST SAND		
UTILITY FOUND:	8" WATER	UTILITY CONDITION:	POOR		
		MARKER SURVEYED BY:	A/I/DATA		

SECTION VIEW OF TEST HOLE

NOT TO SCALE

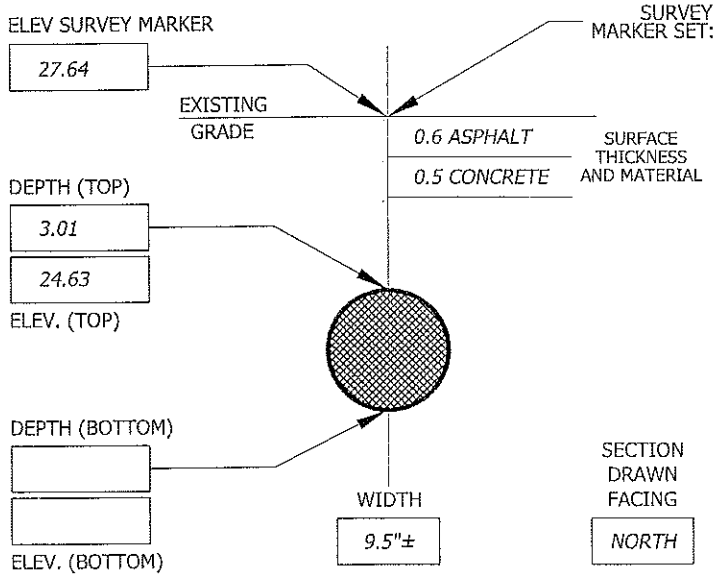

SURVEY MARKER SET: PK NAIL ABOVE: CROWN OF UTILITY MARKING TAPE INSTALLED: BLUE

CONTROL POINTS PROVIDED BY: WHITMAN REQUARDT AND ASSOCIATES, LLP

105	N= -2202.90	E= 4545.83	ELEV= 27.43
106	N= -1748.30	E= 4524.82	ELEV= 32.27

A/I/DATA MARKER:	NORTHING	EASTING	ELEVATION
	-2238.93	4486.79	27.64

NOTES:
UNABLE TO OBTAIN MATERIAL DUE TO CORROSION ON PIPE.

TEST HOLE DATA PRODUCED BY:
ACCURATE INFRASTRUCTURE DATA, INC.
1100 BATAVIA FARM ROAD, SUITE 200, BALTIMORE, MD 21237
PH: 410-686-5091 FAX: 410-686-5093
ALL MEASUREMENTS ARE SHOWN IN DECIMAL FEET EXCEPT WHERE NOTED

PLAN VIEW OF TEST HOLE

DIMENSIONS GOVERN; DO NOT SCALE

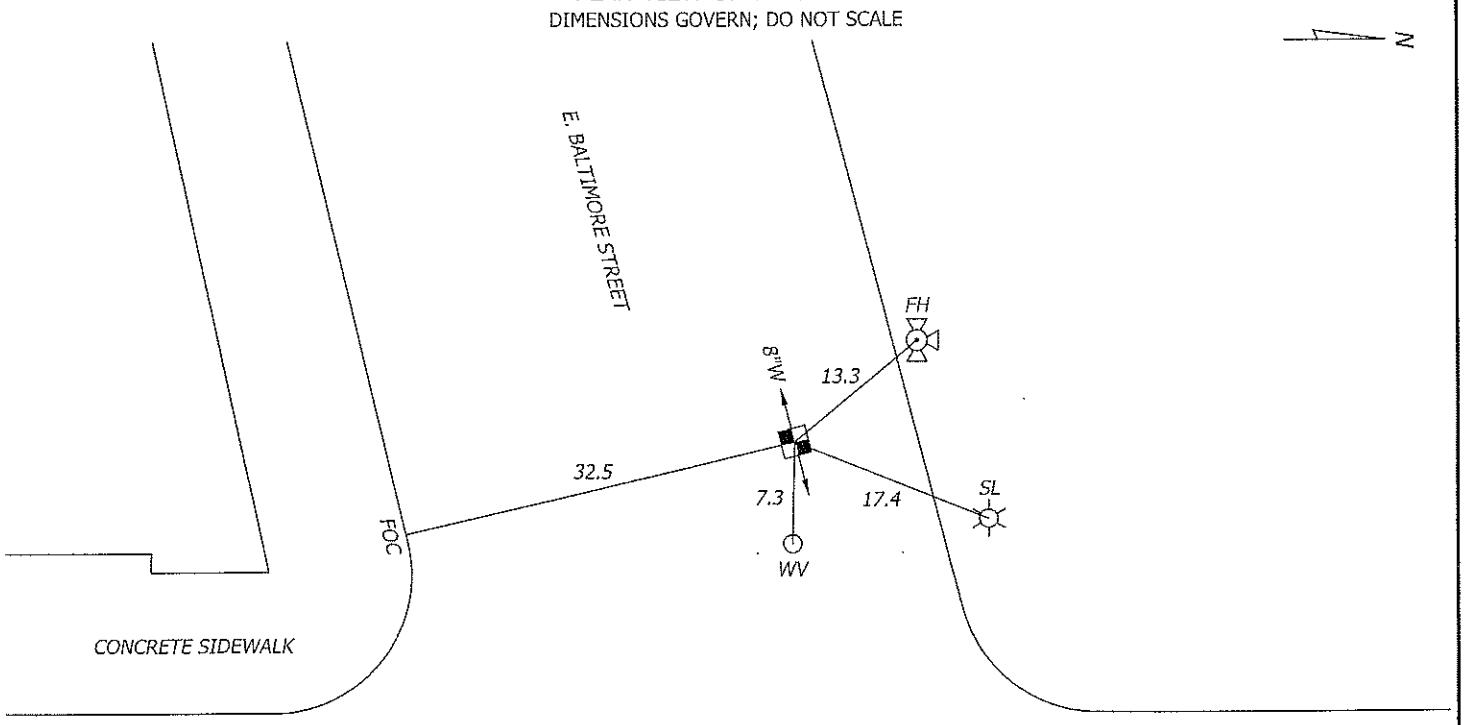

F.A.P. NO. STP-3057(4)N
SHA CONTRACT NO: BC320-001-815
BALTIMORE CITY CONTRACT NO. TR08310

F.A.P. NO. STP-3057(4)N
SHA CONTRACT NO. BC320-001-815
BALTIMORE CITY CONTRACT NO. TR 08310

EXTRA WORK CERTIFICATION

CITY OF BALTIMORE
DEPARTMENT OF PUBLIC WORKS

CONTRACT NUMBER **F.A.P. NO. STP-3057(4)N, SHA NO. BC320-001-815, BALTIMORE CITY NO. TR08310**

PROJECT **REHABILITATION OF CENTRAL AVE AND STORM DRAIN, EASTERN AVENUE TO MADISON STREET**

DATE _____
(Preferably as of end of month)

To the Director of Finance:

In reference to the above referenced contract, we hereby certify that as of the above date no extra work or other conditions that would give rise to additional costs have been authorized either in writing, verbally, or otherwise except that which is represented by fully executed Change Orders Expenditure Authorization Requests and that as of the above date we are not aware of any condition that would give rise to any additional claim upon the Mayor and City Council of Baltimore in reference to the above project, EXCEPT AS FOLLOWS:

CERTIFIED CORRECT:

_____
Name of Contractor

_____ By: _____
Date of Certification Authorized Signature

THIS FORM MUST ACCOMPANY ALL REQUESTS FOR PAYMENTS.

NOTE: NO INFORMATION OTHER THAN THAT INCLUDED IN OR ATTACHED TO THE ORIGINAL BID DOCUMENT (WHERE SUCH ATTACHMENT IS PERMITTED) WILL BE USED IN DETERMINING AWARD

ORIGINAL
(Not to be Detached)

CITY OF BALTIMORE
DEPARTMENT OF TRANSPORTATION

F.A.P. NO. STP-3057(4)N; S.H.A NO. BC320-001-815; BALTIMORE CITY NO. TR08310, REHABILITATION OF CENTRAL AVENUE AND STORM DRAIN, EASTERN AVENUE TO MADISON STREET

Opening of Bids September 14, 2011

Certified Check or Bank Cashier's Check or Bank Treasurer's Check or bid Bond Equal to Five Percent (5%) of Total Bid _____

Days for completion 1960 Consecutive Calendar Days

Liquidated Damages **$4,200** Per Calendar Day

Made this _____ day of _____, 20_____

By _____
(Name)

_____
(Address)

(NOTE:)The Bidder's name and Address must be inserted above, and in the case of a Firm, the Name of the Firm and of each and every Member of the Firm must be inserted. In case a Bid shall be submitted by or on behalf of any corporation, the Name of such Corporation must be written above).

To the Board of Estimates of Baltimore City

Board Members:

I/We the undersigned Contractor, have familiarized myself/ourselves with the Requirements and Stipulations of the Contract Documents and the site of the proposed work, and fully understand and appreciate the extent and character of the work to be done under the Contract.

I/We propose to furnish all labor, materials and equipment and to do everything except as otherwise provided in the Contract Documents.

Specifications, Special Provisions, Drawings and /or other Contract Documents hereto attached, at the following prices: P-1

ATTENTION ALL BIDDERS:

IN ORDER TO RECEIVE FINAL CONTRACT AWARD, A VENDOR MUST BE REGISTERED ON eMarylandMarketplace. TO REGISTER YOUR COMPANY, CONNECT TO www.emarylandmarketplace.com CLICK ON VENDOR REGISTRATION AND FOLLOW THE INSTRUCTIONS.

eMarylandMarketPlace (410) 767-1492.

NOTE: There is no fee to register.

F.A.P. No.: STP-3057(4)N
S.H.A. No.: BC320-001-815
Baltimore City No.: TR0831C

SCHEDULE OF PRICES

NOTE - THIS PROPOSAL SHALL BE FILLED IN BY THE BIDDER WITH THE PRICES WRITTEN IN WORDS AND NUMERALS, AND THE EXTENSIONS SHALL BE MADE BY HIM. FOR COMPLETE INFORMATION CONCERNING THESE ITEMS SEE SPECIFICATIONS SPECIAL PROVISIONS, AND CONTRACT FORM

ITEM NOS.	APPROXIMATE QUANTITIES	DESCRIPTION OF ITEMS AND PRICES BID (IN WRITTEN WORDS)	UNIT PRICE DOLLARS	UNIT PRICE .CTS	AMOUNTS DOLLARS	AMOUNTS .CTS
101	LUMP SUM	CCN 10000 LUMP SUM OF ---------- CLEARING AND GRUBBING AT _____ PER LUMP SUM	LUMP	SUM	_____	___
102	LUMP SUM	CCN 10000 LUMP SUM OF ---------- PRE AND POST CONSTRUCTION SURVEYS AT _____ PER LUMP SUM	LUMP	SUM	_____	___
103	LUMP SUM	CCN 10000 LUMP SUM OF ---------- CRITICAL PATH METHOD PROJECT SCHEDULE AT _____ PER LUMP SUM	LUMP	SUM	_____	___
104	LUMP SUM	CCN 10000 LUMP SUM OF ---------- TEMPORARY TRAFFIC SIGNALS AT _____ PER LUMP SUM	LUMP	SUM	_____	___
105	56,000	CCN 10000 LINEAR FEET OF ---------- 5 INCH YELLOW NONTOXIC LEAD FREE WATERBORNE PAVEMENT MARKING PAINT AT _____ PER LIN. FT.	_____	___	_____	___
106	56,000	CCN 10000 LINEAR FEET OF ---------- 5 INCH WHITE NONTOXIC LEAD FREE WATERBORNE PAVEMENT MARKING PAINT AT _____ PER LIN. FT.	_____	___	_____	___

F.A.P. No.: STP-3057(4)N
S.H.A. No.: BC320-001-815
Baltimore City No.: TR08310

SCHEDULE OF PRICES

NOTE - NOTE - THIS PROPOSAL SHALL BE FILLED IN BY THE BIDDER WITH THE PRICES WRITTEN IN WORDS AND NUMERALS, AND THE EXTENSIONS SHALL BE MADE BY HIM. FOR COMPLETE INFORMATION CONCERNING THESE THESE ITEMS SEE SPECIFICATIONS SPECIAL PROVISIONS, AND CONTRACT FORM

ITEM NOS.	APPROXIMATE QUANTITIES	DESCRIPTION OF ITEMS AND PRICES BID (IN WRITTEN WORDS)	UNIT PRICE DOLLARS	UNIT PRICE .CTS	AMOUNTS DOLLARS	AMOUNTS .CTS
107	1,600	CCN 10000 LINEAR FEET OF ---------- 24 INCH WHITE NONTOXIC LEAD FREE WATERBORNE PAVEMENT MARKING PAINT AT _____ PER LIN. FT.	_____	___	_____	___
108	10,000	CCN 10000 LINEAR FEET OF ---------- 5 INCH YELLOW REMOVABLE PREFORMED PAVEMENT LINE MARKINGS AT _____ PER LIN. FT.	_____	___	_____	___
109	10,000	CCN 10000 LINEAR FEET OF ---------- 5 INCH WHITE REMOVABLE PREFORMED PAVEMENT LINE MARKINGS AT _____ PER LIN. FT.	_____	___	_____	___
110	2,500	CCN 10000 LINEAR FEET OF ---------- 12 INCH WHITE NONTOXIC LEAD FREE WATERBORNE PAVEMENT MARKING PAINT AT _____ PER LIN. FT.	_____	___	_____	___
111	70	CCN 10000 EACH OF ---------- REMOVABLE PREFORMED LETTERS AT _____ PER EACH	_____	___	_____	___
112	70	CCN 10000 EACH OF ---------- REMOVABLE PREFORMED ARROWS AT _____ PER EACH	_____	___	_____	___

F.A.P. No.: STP-3057(4)N
S.H.A. No.: BC320-001-815
Baltimore City No.: TR0831C

SCHEDULE OF PRICES

NOTE - THIS PROPOSAL SHALL BE FILLED IN BY THE BIDDER WITH THE PRICES WRITTEN IN WORDS AND NUMERALS, AND THE EXTENSIONS SHALL BE MADE BY HIM. FOR COMPLETE INFORMATION CONCERNING THESE ITEMS SEE SPECIFICATIONS SPECIAL PROVISIONS, AND CONTRACT FORM

ITEM NOS.	APPROXIMATE QUANTITIES	DESCRIPTION OF ITEMS AND PRICES BID (IN WRITTEN WORDS)	UNIT PRICE DOLLARS	UNIT PRICE .CTS	AMOUNTS DOLLARS	AMOUNTS .CTS
113	140	CCN 10000 EACH OF ---------- REMOVAL OF REMOVABLE PREFORMED LETTERS, SYMBOLS, ARROWS, AND NUMBERS AT _____ PER EACH	_____	___	_____	___
114	22,500	CCN 10000 LINEAR FEET OF ---------- REMOVAL OF REMOVABLE PREFORMED PAVEMENT MARKINGS-ANY WIDTH AT _____ PER LIN. FT.	_____	___	_____	___
115	10,000	CCN 10000 LINEAR FEET OF ---------- REMOVAL OF EXISTING PAVEMENT LINE MARKINGS - ANY WIDTH AT _____ PER LIN. FT.	_____	___	_____	___
116	20	CCN 10000 EACH OF ---------- REMOVAL OF EXISTING PAVEMENT LETTERS, SYMBOLS, ARROWS, AND NUMBERS AT _____ PER EACH	_____	___	_____	___
117	3,000	CCN 10000 LINEAR FEET OF ---------- 8 INCH BLACKOUT TAPE LINES AT _____ PER LIN. FT.	_____	___	_____	___
118	6,400	CCN 10000 TONS OF ---------- CRUSHER RUN AGGREGATE CR-6 FOR MAINTENANCE OF TRAFFIC AT _____ PER TON	_____	___	_____	___

SCHEDULE OF PRICES

NOTE - 'NOTE - THIS PROPOSAL SHALL BE FILLED IN BY THE BIDDER WITH THE PRICES WRITTEN IN WORDS AND NUMER/NUMERALS, AND THE EXTENSIONS SHALL BE MADE BY HIM. FOR COMPLETE INFORMATION CONCERNING THESE I'THESE ITEMS SEE SPECIFICATIONS SPECIAL PROVISIONS, AND CONTRACT FORM

ITEM NOS.	APPROXIMATE QUANTITIES	DESCRIPTION OF ITEMS AND PRICES BID (IN WRITTEN WORDS)	UNIT PRICE DOLLARS	UNIT PRICE .CTS	AMOUNTS DOLLARS	AMOUNTS .CTS
119	500	CCN 10000 TONS OF ---------- HOT MIX ASPHALT FOR MAINTENANCE OF TRAFFIC AT _____ PER TON	_____	___	_____	___
120	1,854	CCN 10000 SQUARE FEET OF ---------- TEMPORARY TRAFFIC SIGNS HIGH PERFORMANCE WIDE ANGLE RETROREFLECTIVE SHEETING AT _____ PER SQ. FT.	_____	___	_____	___
121	17,500	CCN 10000 LINEAR FEET OF ---------- RESET PRECAST TEMPORARY CONCRETE TRAFFIC BARRIER FOR MAINTENANCE OF TRAFFIC AT _____ PER LIN. FT.	_____	___	_____	___
122	200	CCN 10000 EACH OF ---------- REFLECTIVE BARRIER MARKERS AT _____ PER EACH	_____	___	_____	___
123	50	CCN 10000 EACH OF ---------- TYPE III BARRICADE FOR MAINTENANCE OF TRAFFIC AT _____ PER EACH	_____	___	_____	___
124	250	CCN 10000 BARRELS OF---------- TEMPORARY CRASH CUSHION SAND FILLED PLASTIC BARRELS FOR MAINTENANCE OF TRAFFIC AT _____ PER BARREL	_____	___	_____	___

SCHEDULE OF PRICES

NOTE - THIS PROPOSAL SHALL BE FILLED IN BY THE BIDDER WITH THE PRICES WRITTEN IN WORDS AND NUMERALS, AND THE EXTENSIONS SHALL BE MADE BY HIM. FOR COMPLETE INFORMATION CONCERNING THESE ITEMS SEE SPECIFICATIONS SPECIAL PROVISIONS, AND CONTRACT FORM

ITEM NOS.	APPROXIMATE QUANTITIES	DESCRIPTION OF ITEMS AND PRICES BID (IN WRITTEN WORDS)	UNIT PRICE DOLLARS	UNIT PRICE .CTS	AMOUNTS DOLLARS	AMOUNTS .CTS
125	50	CCN 10000 BARRELS OF ---------- REPLACE TEMPORARY CRASH CUSHION SAND FILLED PLASTIC BARRELS FOR MAINTENANCE OF TRAFFIC AT _____ PER BARREL	_____	___	_____	___
126	200	CCN 10000 EACH OF ---------- VERTICAL PANELS AT _____ PER EACH	_____	___	_____	___
127	1,800	CCN 10000 BARRELS OF ---------- REMOVE AND RESET TEMPORARY CRASH CUSHION SAND FILLED PLASTIC BARRELS FOR MAINTENANCE OF TRAFFIC AT _____ PER BARREL	_____	___	_____	___
128	10,000	CCN 10000 LINEAR FEET OF ---------- TEMPORARY ORANGE CONSTRUCTION FENCE AT _____ PER LIN. FT.	_____	___	_____	___
129	500	CCN 10000 EACH OF ---------- DRUMS FOR MAINTENANCE OF TRAFFIC AT _____ PER EACH	_____	___	_____	___
130	4,500	CCN 10000 UNIT DAYS OF ---------- PORTABLE VARIABLE MESSAGE SIGN AT _____ PER UNIT DAY	_____	___	_____	___
131	3,000	CCN 10000 LINEAR FEET OF ---------- PRECAST TEMPORARY 32 INCH F SHAPE CONCRETE TRAFFIC BARRIER AT _____ PER LIN. FT.	_____	___	_____	___

SCHEDULE OF PRICES

NOTE - 'NOTE - THIS PROPOSAL SHALL BE FILLED IN BY THE BIDDER WITH THE PRICES WRITTEN IN WORDS AND NUMERALS, AND THE EXTENSIONS SHALL BE MADE BY HIM. FOR COMPLETE INFORMATION CONCERNING THESE I THESE ITEMS SEE SPECIFICATIONS SPECIAL PROVISIONS, AND CONTRACT FORM

ITEM NOS.	APPROXIMATE QUANTITIES	DESCRIPTION OF ITEMS AND PRICES BID (IN WRITTEN WORDS)	UNIT PRICE DOLLARS	UNIT PRICE .CTS	AMOUNTS DOLLARS	AMOUNTS .CTS
132	LUMP SUM	CCN 10000 LUMP SUM OF ---------- ENGINEER'S OFFICE TYPE C AT _____ PER LUMP SUM	LUMP	SUM	_____	___
133	LUMP SUM	CCN 10000 LUMP SUM OF ---------- MAINTENANCE OF TRAFFIC AT _____ PER LUMP SUM	LUMP	SUM	_____	___
134	6,000	CCN 10000 UNIT DAYS OF ---------- ARROW BOARD AT _____ PER UNIT DAY	_____	___	_____	___
135	LUMP SUM	CCN 10000 LUMP SUM OF ---------- CONSTRUCTION STAKEOUT AT _____ PER LUMP SUM	LUMP	SUM	_____	___
136	LUMP SUM	CCN 10000 LUMP SUM OF ---------- MOBILIZATION AT _____ PER LUMP SUM	LUMP	SUM	_____	___
137	10,000	CCN 10000 HOURLY RATE OF---------- ON-THE-JOB-TRAINING AT _____ PER HOUR	0	80	8000	.00
		END OF CATEGORY NO. 1 NO ALTERNATES.				

F.A.P. No.: STP-3057(4)N

S.H.A. No.: BC320-001-815

Baltimore City No.: TR08310

SCHEDULE OF PRICES

NOTE - THIS PROPOSAL SHALL BE FILLED IN BY THE BIDDER WITH THE PRICES WRITTEN IN WORDS AND NUMERALS, AND THE EXTENSIONS SHALL BE MADE BY HIM. FOR COMPLETE INFORMATION CONCERNING THESE ITEMS SEE SPECIFICATIONS SPECIAL PROVISIONS, AND CONTRACT FORM

ITEM NOS.	APPROXIMATE QUANTITIES	DESCRIPTION OF ITEMS AND PRICES BID (IN WRITTEN WORDS)	UNIT PRICE DOLLARS	UNIT PRICE .CTS	AMOUNTS DOLLARS	AMOUNTS .CTS
201	17,700	CCN 20000 CUBIC YARDS OF ---------- CLASS 1 EXCAVATION AT _____ PER CU. YD.				
202	1,770	CCN 20000 CUBIC YARDS OF ---------- CLASS 1-A EXCAVATION AT _____ PER CU. YD.				
203	50	CCN 20000 CUBIC YARDS OF ---------- COMMON BORROW AT _____ PER CU. YD.				
204	3,900	CCN 20000 CUBIC YARDS OF ---------- CONTINGENT SPECIAL EXCAVATION-RAILWAY AREA AT _____ PER CU. YD.				
205	4	CCN 20000 CUBIC YARDS OF ---------- REMOVAL OF EXISTING MASONRY AT _____ PER CU. YD.				
206	1,000	CCN 20000 CUBIC YARDS OF ---------- TEST PIT EXCAVATION AT _____ PER CU. YD.				
207	1,700	CCN 20000 CUBIC YARDS OF ---------- VARIABLE DEPTH GRADED AGGREGATE BASE FOR BACKFILL AT _____ PER CU. YD.				

F.A.P. No.: STP-3057(4)N

S.H.A. No.: BC320-001-815

Baltimore City No.: TR08310

SCHEDULE OF PRICES

NOTE - NOTE - THIS PROPOSAL SHALL BE FILLED IN BY THE BIDDER WITH THE PRICES WRITTEN IN WORDS AND NUMERALS, AND THE EXTENSIONS SHALL BE MADE BY HIM. FOR COMPLETE INFORMATION CONCERNING THESE ITHESE ITEMS SEE SPECIFICATIONS SPECIAL PROVISIONS, AND CONTRACT FORM

ITEM NOS.	APPROXIMATE QUANTITIES	DESCRIPTION OF ITEMS AND PRICES BID (IN WRITTEN WORDS)	UNIT PRICE DOLLARS	UNIT PRICE .CTS	AMOUNTS DOLLARS	AMOUNTS .CTS
208	103,000	CCN 20000 GALLONS OF ---------- CONTINGENT PUMPING AND MANAGEMENT OF CONTAMINATED WATER AND LIQUID AT _____ PER GALLON	_____	___	_____	___
209	LUMP SUM	CCN 20000 LUMP SUM OF ---------- PLANNING DOCUMENTS AT _____ PER LUMP SUM	LUMP	SUM	_____	___
210	1,100	CCN 20000 TONS OF ---------- CONTINGENT HANDLING AND DISPOSAL OF HAZARDOUS SOIL AT _____ PER TON	_____	___	_____	___
		END OF CATEGORY NO. 2 NO ALTERNATES.				

F.A.P. No.: STP-3057(4)N
S.H.A. No.: BC320-001-815
Baltimore City No.: TR08310

SCHEDULE OF PRICES

NOTE - THIS PROPOSAL SHALL BE FILLED IN BY THE BIDDER WITH THE PRICES WRITTEN IN WORDS AND NUMERALS, AND THE EXTENSIONS SHALL BE MADE BY HIM. FOR COMPLETE INFORMATION CONCERNING THESE ITEMS SEE SPECIFICATIONS SPECIAL PROVISIONS, AND CONTRACT FORM

ITEM NOS.	APPROXIMATE QUANTITIES	DESCRIPTION OF ITEMS AND PRICES BID (IN WRITTEN WORDS)	UNIT PRICE DOLLARS	UNIT PRICE .CTS	AMOUNTS DOLLARS	AMOUNTS .CTS
301	20	CCN 30000 CUBIC YARDS OF ---------- BRICK MASONRY FOR MISCELLANEOUS STRUCTURES AT _____ PER CU. YD.	_____	___	_____	___
302	16	CCN 30000 CUBIC YARDS OF ---------- BULKHEAD AND ABANDON EX. PIPE W/FLOWABLE FILL AT _____ PER CU. YD.	_____	___	_____	___
303	75	CCN 30000 CUBIC YARDS OF ---------- CLASS 3 EXCAVATION FOR INCIDENTAL CONSTRUCTION AT _____ PER CU. YD.	_____	___	_____	___
304	20	CCN 30000 CUBIC YARDS OF ---------- MIX 3 CONCRETE FOR MISCELLANEOUS STRUCTURES AT _____ PER CU. YD.	_____	___	_____	___
305	75	CCN 30000 CUBIC YARD OF ---------- SELECT BACKFILL USING AASHTO NO. 57 AGGREGATE AT _____ PER CU. YD.	_____	___	_____	___
306	10	CCN 30000 EACH OF ---------- 15 INCH CONCRETE PIPE CONNECTION AT _____ PER EACH	_____	___	_____	___
307	5	CCN 30000 EACH OF ---------- 18 INCH CONCRETE PIPE CONNECTION AT _____ PER EACH	_____	___	_____	___

F.A.P. No.: STP-3057(4)N
S.H.A. No.: BC320-001-815
Baltimore City No.: TR0831(

SCHEDULE OF PRICES

NOTE - NOTE - THIS PROPOSAL SHALL BE FILLED IN BY THE BIDDER WITH THE PRICES WRITTEN IN WORDS AND NUMERALS, AND THE EXTENSIONS SHALL BE MADE BY HIM. FOR COMPLETE INFORMATION CONCERNING THESE ITHESE ITEMS SEE SPECIFICATIONS SPECIAL PROVISIONS, AND CONTRACT FORM

ITEM NOS.	APPROXIMATE QUANTITIES	DESCRIPTION OF ITEMS AND PRICES BID (IN WRITTEN WORDS)	UNIT PRICE DOLLARS	UNIT PRICE .CTS	AMOUNTS DOLLARS	AMOUNTS .CTS
308	1	CCN 30000 EACH OF ---------- 24 INCH CONCRETE PIPE CONNECTION AT _____ PER EACH	_____	____	_____	____
309	1	CCN 30000 EACH OF ---------- 48 INCH DIAMETER MANHOLE FOR 12 INCH TO 24 INCH PIPES - MINIMUM DEPTH AT _____ PER EACH	_____	____	_____	____
310	1	CCN 30000 EACH OF ---------- 60 INCH DIAMETER MANHOLE FOR 27 INCH TO 36 INCH PIPES - MINIMUM DEPTH AT _____ PER EACH	_____	____	_____	____
311	1	CCN 30000 EACH OF ---------- 72 INCH DIAMETER MANHOLE FOR 42 INCH AND 48 INCH PIPES - MINIMUM DEPTH AT _____ PER EACH	_____	____	_____	____
312	19	CCN 30000 EACH OF ---------- CLEAN EXISTING INLETS AT _____ PER EACH	_____	____	_____	____
313	15	CCN 30000 EACH OF ---------- CONVERT EXISTING STORM DRAIN STRUCTURE TO JUNCTION BOX AT _____ PER EACH	_____	____	_____	____

F.A.P. No.: STP-3057(4)N
S.H.A. No.: BC320-001-815
Baltimore City No.: TR08310

SCHEDULE OF PRICES

NOTE - 'NOTE - THIS PROPOSAL SHALL BE FILLED IN BY THE BIDDER WITH THE PRICES WRITTEN IN WORDS AND NUMERALS, AND THE EXTENSIONS SHALL BE MADE BY HIM. FOR COMPLETE INFORMATION CONCERNING THESE ITHESE ITEMS SEE SPECIFICATIONS SPECIAL PROVISIONS, AND CONTRACT FORM

ITEM NOS.	APPROXIMATE QUANTITIES	DESCRIPTION OF ITEMS AND PRICES BID (IN WRITTEN WORDS)	UNIT PRICE DOLLARS	UNIT PRICE .CTS	AMOUNTS DOLLARS	AMOUNTS .CTS
314	21	CCN 30000 EACH OF ---------- PORTABLE SEDIMENT TANK AT _____ PER EACH	_____	___	_____	___
315	6	CCN 30000 EACH OF ---------- REMOVAL OF EXISTING STORM DRAIN STRUCTURE - ANY SIZE AT _____ PER EACH	_____	___	_____	___
316	3	CCN 30000 EACH OF ---------- REPLACE INLET FRAME AND GRATE W/FRAME AND CURVED-VANE GRATE AT _____ PER EACH	_____	___	_____	___
317	26	CCN 30000 EACH OF ---------- STANDARD TYPE E COMBINATION INLET, CURVED-VANE GRATE - MINIMUM DEPTH AT _____ PER EACH	_____	___	_____	___
318	24	CCN 30000 LINEAR FEET OF ---------- STANDARD TYPE E COMBINATION INLET, CURVED-VANE GRATE - VERTICAL DEPTH AT _____ PER LIN FT.	_____	___	_____	___
319	1	CCN 30000 EACH OF ---------- REPLACE SLAB FRAME AND GRATE WITH STANDARD TYPE H COMBINATION INLET SLAB AND FRAME AT _____ PER EACH	_____	___	_____	___

F.A.P. No.: STP-3057(4)N
S.H.A. No.: BC320-001-815
Baltimore City No.: TR0831(

SCHEDULE OF PRICES

NOTE - NOTE - THIS PROPOSAL SHALL BE FILLED IN BY THE BIDDER WITH THE PRICES WRITTEN IN WORDS AND NUMERALS, AND THE EXTENSIONS SHALL BE MADE BY HIM. FOR COMPLETE INFORMATION CONCERNING THESE ITHESE ITEMS SEE SPECIFICATIONS SPECIAL PROVISIONS, AND CONTRACT FORM

ITEM NOS.	APPROXIMATE QUANTITIES	DESCRIPTION OF ITEMS AND PRICES BID (IN WRITTEN WORDS)	UNIT PRICE DOLLARS	UNIT PRICE .CTS	AMOUNTS DOLLARS	AMOUNTS .CTS
320	5	CCN 30000 EACH OF ---------- STANDARD TYPE H INLET - MINIMUM DEPTH AT _____ PER EACH				
321	8.5	CCN 30000 LINEAR FEET OF ---------- STANDARD TYPE H INLET - VERTICAL DEPTH AT _____ PER LIN FT.				
322	1	CCN 30000 EACH OF ---------- SLOTTED DRAIN INLET - INLET NO. I-38 AT _____ PER EACH				
323	88	CCN 30000 EACH OF ---------- WATTLE INLET PROTECTION AT _____ PER EACH				
324	290	CCN 30000 LINEAR FEET OF ---------- 15 INCH REINFORCED CONCRETE PIPE, CLASS IV AT _____ PER LIN FT.				
325	146	CCN 30000 LINEAR FEET OF ---------- 18 INCH REINFORCED CONCRETE PIPE, CLASS IV AT _____ PER LIN FT.				
326	21	CCN 30000 LINEAR FEET OF ---------- 24 INCH REINFORCED CONCRETE PIPE, CLASS IV AT _____ PER LIN FT.				

F.A.P. No.: STP-3057(4)N
S.H.A. No.: BC320-001-815
Baltimore City No.: TR0831(

SCHEDULE OF PRICES

NOTE - 'NOTE - THIS PROPOSAL SHALL BE FILLED IN BY THE BIDDER WITH THE PRICES WRITTEN IN WORDS AND NUMERALS, AND THE EXTENSIONS SHALL BE MADE BY HIM. FOR COMPLETE INFORMATION CONCERNING THESE I'THESE ITEMS SEE SPECIFICATIONS SPECIAL PROVISIONS, AND CONTRACT FORM

ITEM NOS.	APPROXIMATE QUANTITIES	DESCRIPTION OF ITEMS AND PRICES BID (IN WRITTEN WORDS)	UNIT PRICE DOLLARS	UNIT PRICE .CTS	AMOUNTS DOLLARS	AMOUNTS .CTS
327	24	CCN 30000 LINEAR FEET OF ---------- TEMPORARY 3-INCH ASPHALT BERM AT _____ PER LIN FT.	_____	___	_____	___
328	180	CCN 30000 LINEAR FEET OF ---------- CLEAN EXISTING PIPE ANY SIZE AT _____ PER LIN FT.	_____	___	_____	___
329	313	CCN 30000 LINEAR FEET OF ---------- 15" SMOOTH INTERIOR SLOTTED DRAIN AT _____ PER LIN FT.	_____	___	_____	___
330	195	CCN 30000 LINEAR FEET OF ---------- CURED-IN PLACE S.D. PIPE LINING, 15 INCH DIAMETER AT _____ PER LIN FT.	_____	___	_____	___
331	321	CCN 30000 LINEAR FEET OF ---------- CURED-IN PLACE S.D. PIPE LINING, 18 INCH DIAMETER AT _____ PER LIN FT.	_____	___	_____	___
332	197	CCN 30000 LINEAR FEET OF ---------- CURED-IN PLACE S.D. PIPE LINING, 24 INCH DIAMETER AT _____ PER LIN FT.	_____	___	_____	___
333	326	CCN 30000 LINEAR FEET OF ---------- CURED-IN PLACE S.D. PIPE LINING, 30 INCH DIAMETER AT _____ PER LIN FT.	_____	___	_____	___

SCHEDULE OF PRICES

NOTE - 'NOTE - THIS PROPOSAL SHALL BE FILLED IN BY THE BIDDER WITH THE PRICES WRITTEN IN WORDS AND NUMERALS, AND THE EXTENSIONS SHALL BE MADE BY HIM. FOR COMPLETE INFORMATION CONCERNING THESE ITEMS SEE SPECIFICATIONS SPECIAL PROVISIONS, AND CONTRACT FORM

ITEM NOS.	APPROXIMATE QUANTITIES	DESCRIPTION OF ITEMS AND PRICES BID (IN WRITTEN WORDS)	UNIT PRICE DOLLARS	UNIT PRICE .CTS	AMOUNTS DOLLARS	AMOUNTS .CTS
334	471	CCN 30000 LINEAR FEET OF ---------- CURED-IN PLACE S.D. PIPE LINING, 36 INCH DIAMETER AT _____ PER LIN FT.	_____	___	_____	___
335	449	CCN 30000 LINEAR FEET OF ---------- CURED-IN PLACE S.D. PIPE LINING, 42 INCH DIAMETER AT _____ PER LIN FT.	_____	___	_____	___
336	303	CCN 30000 LINEAR FEET OF ---------- CURED-IN PLACE S.D. PIPE LINING, 48 INCH DIAMETER AT _____ PER LIN FT.	_____	___	_____	___
337	1,440	CCN 30000 TONS OF ---------- STABILIZED CONSTRUCTION ENTRANCE AT _____ PER TON	_____	___	_____	___
338	300	CCN 30000 LINEAR FEET OF ---------- 3-INCH PVC PIPE FOR ROOF DRAIN OUTFALL AT _____ PER LIN FT.	_____	___	_____	___
339	14	CCN 30000 CUBIC YARDS OF ---------- FLOWABLE FILL FOR UTILITY CUTS AT _____ PER CU YD.	_____	___	_____	___
		END OF CATEGORY NO. 3 NO ALTERNATES.				

F.A.P. No.: STP-3057(4)N
S.H.A. No.: BC320-001-815
Baltimore City No.: TR08310

SCHEDULE OF PRICES

NOTE - THIS PROPOSAL SHALL BE FILLED IN BY THE BIDDER WITH THE PRICES WRITTEN IN WORDS AND NUMERALS, AND THE EXTENSIONS SHALL BE MADE BY HIM. FOR COMPLETE INFORMATION CONCERNING THESE ITEMS SEE SPECIFICATIONS SPECIAL PROVISIONS, AND CONTRACT FORM

ITEM NOS.	APPROXIMATE QUANTITIES	DESCRIPTION OF ITEMS AND PRICES BID (IN WRITTEN WORDS)	UNIT PRICE DOLLARS	UNIT PRICE .CTS	AMOUNTS DOLLARS	AMOUNTS .CTS
401	LUMP SUM	LUMP SUM OF ---------- MAINTENANCE OF STREAM FLOW AT _____ PER LUMP SUM	LUMP	SUM	_____	___
402	650	CCN 40000 CUBIC YARDS OF ---------- SILT REMOVAL AT _____ PER CUBIC YARD	_____	___	_____	___
403	750	CCN 40000 SQUARE FEET OF ---------- STORM DRAIN REPAIRS AT _____ PER SQ. FT.	_____	___	_____	___
404	LUMP SUM	CCN 40000 LUMP SUM OF ---------- HIGH PRESSURE WATER JET CLEANING OF STORM DRAIN AT _____ PER LUMP SUM	LUMP	SUM	_____	___
405	1,537	CCN 40000 LINEAR FEET OF ---------- REINFORCED MACHINE SPIRAL WOUND PVC LINER PIPE-TYPE 1 AT _____ PER LIN FT.	_____	___	_____	___
406	150	CCN 40000 LINEAR FEET OF ---------- REINFORCED MACHINE SPIRAL WOUND PVC LINER PIPE-TYPE 2 AT _____ PER LIN FT.	_____	___	_____	___
407	150	CCN 40000 LINEAR FEET OF ---------- REINFORCED MACHINE SPIRAL WOUND PVC LINER PIPE-TYPE 3 AT _____ PER LIN FT.	_____	___	_____	___

SCHEDULE OF PRICES

NOTE - NOTE - THIS PROPOSAL SHALL BE FILLED IN BY THE BIDDER WITH THE PRICES WRITTEN IN WORDS AND NUMERALS, AND THE EXTENSIONS SHALL BE MADE BY HIM. FOR COMPLETE INFORMATION CONCERNING THESE ITEMS SEE SPECIFICATIONS SPECIAL PROVISIONS, AND CONTRACT FORM

ITEM NOS.	APPROXIMATE QUANTITIES	DESCRIPTION OF ITEMS AND PRICES BID (IN WRITTEN WORDS)	UNIT PRICE DOLLARS	UNIT PRICE .CTS	AMOUNTS DOLLARS	AMOUNTS .CTS
408	132	CCN 40000 LINEAR FEET OF ---------- REINFORCED MACHINE SPIRAL WOUND PVC LINER PIPE-TYPE 4 AT _____ PER LIN FT.	_____	___	_____	___
409	730	CCN 40000 LINEAR FEET OF ---------- REINFORCED MACHINE SPIRAL WOUND PVC LINER PIPE-TYPE 5 AT _____ PER LIN FT.	_____	___	_____	___
410	33	CCN 40000 LINEAR FEET OF ---------- REINFORCED MACHINE SPIRAL WOUND PVC LINER PIPE-TYPE 5A AT _____ PER LIN FT.	_____	___	_____	___
411	459	CCN 40000 LINEAR FEET OF ---------- REINFORCED MACHINE SPIRAL WOUND PVC LINER PIPE-TYPE 6 AT _____ PER LIN FT.	_____	___	_____	___
412	84	CCN 40000 LINEAR FEET OF ---------- REINFORCED MACHINE SPIRAL WOUND PVC LINER PIPE-TYPE 7 AT _____ PER LIN FT.	_____	___	_____	___
413	LUMP SUM	CCN 40000 LUMP SUM OF ---------- SITE SET UP FOR MACHINE SPIRAL WOUND PVC LINER PIPE AT _____ PER LUMP SUM	LUMP	SUM	_____	___

SCHEDULE OF PRICES

NOTE - "NOTE - THIS PROPOSAL SHALL BE FILLED IN BY THE BIDDER WITH THE PRICES WRITTEN IN WORDS AND NUMERALS, AND THE EXTENSIONS SHALL BE MADE BY HIM. FOR COMPLETE INFORMATION CONCERNING THESE ITEMS SEE SPECIFICATIONS SPECIAL PROVISIONS, AND CONTRACT FORM

ITEM NOS.	APPROXIMATE QUANTITIES	DESCRIPTION OF ITEMS AND PRICES BID (IN WRITTEN WORDS)	UNIT PRICE DOLLARS	UNIT PRICE .CTS	AMOUNTS DOLLARS	AMOUNTS .CTS
414	LUMP SUM	CCN 40000 LUMP SUM OF ---------- ACCESS PIT FOR MACHINE SPIRAL WOUND PVC LINER PIPE AT _____ PER LUMP SUM	LUMP	SUM	_____	____
415	150	CCN 40000 EACH OF ---------- LATERAL CONNECTIONS FOR MACHINE SPIRAL WOUND PVC LINER PIPE, VARIOUS SIZE AT _____ PER EACH	_____	____	_____	____
416	91	CCN 40000 SQUARE FEET OF ---------- 12-INCH REINFORCED CONCRETE BLOCK WALL WITH GROUT FILL AT _____ PER SQ. FT.	_____	____	_____	____
417	1	CCN 40000 CUBIC YARDS OF ---------- FOOTING CONCRETE AT _____ PER CUBIC YARD	_____	____	_____	____
		END OF CATEGORY NO. 4 NO ALTERNATES.				

SCHEDULE OF PRICES

NOTE - THIS PROPOSAL SHALL BE FILLED IN BY THE BIDDER WITH THE PRICES WRITTEN IN WORDS AND NUMERALS, AND THE EXTENSIONS SHALL BE MADE BY HIM. FOR COMPLETE INFORMATION CONCERNING THESE ITEMS SEE SPECIFICATIONS SPECIAL PROVISIONS, AND CONTRACT FORM

ITEM NOS.	APPROXIMATE QUANTITIES	DESCRIPTION OF ITEMS AND PRICES BID (IN WRITTEN WORDS)	UNIT PRICE DOLLARS	UNIT PRICE .CTS	AMOUNTS DOLLARS	AMOUNTS .CTS
501	30	CCN 50000 EACH OF ---------- FURNISH FRAME AND COVER-LESS THAN 12 INCH DIAMETER COVER AT _____ PER EACH	_____	___	_____	___
502	11	CCN 50000 EACH OF ---------- FURNISH FRAME AND COVER-12 INCH TO LESS THAN 30 INCH DIAMETER COVER AT _____ PER EACH	_____	___	_____	___
503	36	CCN 50000 EACH OF ---------- FURNISH FRAME AND COVER-30 INCH DIAMETER AND LARGER, INCLUDING INLETS AT _____ PER EACH	_____	___	_____	___
504	400	CCN 50000 LINEAR FEET OF ---------- 10 INCH WHITE LEAD FREE REFLECTIVE THERMOPLASTIC PAVEMENT MARKINGS AT _____ PER LIN FT.	_____	___	_____	___
505	100	CCN 50000 LINEAR FEET OF ---------- 10 INCH YELLOW LEAD FREE REFLECTIVE THERMOPLASTIC PAVEMENT MARKINGS AT _____ PER LIN FT.	_____	___	_____	___
506	8,000	CCN 50000 LINEAR FEET OF ---------- 12 INCH HEAT APPLIED WHITE PERMANENT PREFORMED THERMOPLASTIC PAVEMENT MARKINGS AT _____ PER LIN FT.	_____	___	_____	___

SCHEDULE OF PRICES

NOTE - NOTE - THIS PROPOSAL SHALL BE FILLED IN BY THE BIDDER WITH THE PRICES WRITTEN IN WORDS AND NUMERALS, AND THE EXTENSIONS SHALL BE MADE BY HIM. FOR COMPLETE INFORMATION CONCERNING THESE ITEMS SEE SPECIFICATIONS SPECIAL PROVISIONS, AND CONTRACT FORM

ITEM NOS.	APPROXIMATE QUANTITIES	DESCRIPTION OF ITEMS AND PRICES BID (IN WRITTEN WORDS)	UNIT PRICE DOLLARS	UNIT PRICE .CTS	AMOUNTS DOLLARS	AMOUNTS .CTS
507	775	CCN 50000 LINEAR FEET OF ---------- 24 INCH HEAT APPLIED WHITE PERMANENT PREFORMED THERMOPLASTIC PAVEMENT MARKINGS AT _____ PER LIN FT.	_____	___	_____	___
508	3,000	CCN 50000 LINEAR FEET OF ---------- 5 INCH WHITE LEAD FREE REFLECTIVE THERMOPLASTIC PAVEMENT MARKINGS AT _____ PER LIN FT.	_____	___	_____	___
509	6,600	CCN 50000 LINEAR FEET OF ---------- 5 INCH YELLOW LEAD FREE REFLECTIVE THERMOPLASTIC PAVEMENT MARKINGS AT _____ PER LIN FT.	_____	___	_____	___
510	550	CCN 50000 SQUARE FEET OF ---------- WHITE PREFORMED THERMOPLASTIC PAVEMENT MARKING LEGENDS AND SYMBOLS AT _____ PER SQ. FT.	_____	___	_____	___
511	6,200	CCN 50000 SQUARE YARDS OF ---------- 3 INCH CRUSHER RUN AGGREGATE CR-6 AT _____ PER SQ. YD.	_____	___	_____	___
512	800	CCN 50000 SQUARE YARDS OF ---------- 6 INCH CRUSHER RUN AGGREGATE CR-6 AT _____ PER SQ. YD.	_____	___	_____	___

F.A.P. No.: STP-3057(4)N
S.H.A. No.: BC320-001-815
Baltimore City No.: TR0831C

SCHEDULE OF PRICES

NOTE - THIS PROPOSAL SHALL BE FILLED IN BY THE BIDDER WITH THE PRICES WRITTEN IN WORDS AND NUMERALS, AND THE EXTENSIONS SHALL BE MADE BY HIM. FOR COMPLETE INFORMATION CONCERNING THESE ITEMS SEE SPECIFICATIONS SPECIAL PROVISIONS, AND CONTRACT FORM

ITEM NOS.	APPROXIMATE QUANTITIES	DESCRIPTION OF ITEMS AND PRICES BID (IN WRITTEN WORDS)	UNIT PRICE DOLLARS	UNIT PRICE .CTS	AMOUNTS DOLLARS	AMOUNTS .CTS
513	23,700	CCN 50000 SQUARE YARDS OF ---------- 8 INCH REINFORCED PORTLAND CEMENT CONCRETE PAVEMENT MIX 7 AT _____ PER SQ. YD.				
514	800	CCN 50000 SQUARE YARDS OF ---------- 7 INCH PORTLAND CEMENT CONCRETE PAVEMENT FOR DRIVEWAY, MIX 9 AT _____ PER SQ, YD.				
515	2,500	CCN 50000 SQUARE YARDS OF ---------- 8 INCH REINFORCED PORTLAND CEMENT CONCRETE PAVEMENT MIX 9 AT _____ PER SQ. YD.				
516	250	CCN 50000 SQUARE YARDS OF ---------- 12 INCH REINFORCED PORTLAND CEMENT CONCRETE PAVEMENT MIX 9 FOR BUS PADS AT _____ PER SQ. YD.				
517	100	CCN 50000 CUBIC YARDS OF ---------- PATCH EXISTING PAVEMENT WITH MIX 9 CONCRETE AT _____ PER CU. YD.				
518	28,600	CCN 50000 SQUARE YARDS OF ---------- 6 INCH GRADED AGGREGATE BASE COURSE AT _____ PER SQ. YD.				

NOTE - THIS PROPOSAL SHALL BE FILLED IN BY THE BIDDER WITH THE PRICES WRITTEN IN WORDS AND NUMERALS, AND THE EXTENSIONS SHALL BE MADE BY HIM. FOR COMPLETE INFORMATION CONCERNING THESE ITEMS SEE SPECIFICATIONS SPECIAL PROVISIONS, AND CONTRACT FORM

ITEM NOS.	APPROXIMATE QUANTITIES	DESCRIPTION OF ITEMS AND PRICES BID (IN WRITTEN WORDS)	UNIT PRICE DOLLARS	UNIT PRICE .CTS	AMOUNTS DOLLARS	AMOUNTS .CTS
519	28,600	CCN 50000 SQUARE YARDS OF ---------- CONSTRUCTION FABRIC AT _____ PER SQ. YD.				
520	1,600	CCN 50000 SQUARE YARDS OF ---------- MILLING HOT MIX ASPHALT PAVEMENT 0 INCH TO 2 INCH AT _____ PER SQ. YD.				
521	3,100	CCN 50000 TONS OF ---------- HMA SUPERPAVE BASE COURSE 19MM PG64-22 LEVEL 2 AT _____ PER TON				
522	3,100	CCN 50000 TONS OF ---------- HMA SUPERPAVE SURFACE COURSE 12.5MM PG76-22 LEVEL 2 AT _____ PER TON				
523	50	CCN 50000 TONS OF ---------- HMA SUPERPAVE WEDGE AND LEVEL 9.5MM PG76-22 LEVEL 4 AT _____ PER TON				
524	9,750	CCN 50000 LINEAR FEET OF ---------- SAWCUTTING AND SEALING OF HOT MIX ASPHALT PAVEMENT AT _____ PER LIN FT.				
525	10,000	CCN 50000 EACH OF ---------- PRICE ADJUSTMENT FOR ASPHALT BINDER AT _____ PER EACH	1	00	10,000	.00

NOTE - THIS PROPOSAL SHALL BE FILLED IN BY THE BIDDER WITH THE PRICES WRITTEN IN WORDS AND NUMERALS, AND THE EXTENSIONS SHALL BE MADE BY HIM. FOR COMPLETE INFORMATION CONCERNING THESE ITEMS SEE SPECIFICATIONS SPECIAL PROVISIONS, AND CONTRACT FORM

ITEM NOS.	APPROXIMATE QUANTITIES	DESCRIPTION OF ITEMS AND PRICES BID (IN WRITTEN WORDS)	UNIT PRICE DOLLARS	UNIT PRICE .CTS	AMOUNTS DOLLARS	AMOUNTS .CTS
526	20,000	CCN 50000 EACH OF ---------- PAYMENT ADJUSTMENT FOR PAVEMENT DENSITY PER EACH	1	00	20,000	.00
527	20,000	CCN 50000 EACH OF ---------- PAYMENT ADJUSTMENT FOR HOT MIX ASPHALT MIXTURE AT _____ PER EACH	1	00	20,000	.00
		END OF CATEGORY NO. 5 NO ALTERNATES.				

F.A.P. No.: STP-3057(4)N
S.H.A. No.: BC320-001-815
Baltimore City No.: TR0831(

F.A.P. No.: STP-3057(4)N
S.H.A. No.: BC320-001-815
Baltimore City No.: TR0831(

SCHEDULE OF PRICES

NOTE - THIS PROPOSAL SHALL BE FILLED IN BY THE BIDDER WITH THE PRICES WRITTEN IN WORDS AND NUMERALS, AND THE EXTENSIONS SHALL BE MADE BY HIM. FOR COMPLETE INFORMATION CONCERNING THESE ITEMS SEE SPECIFICATIONS SPECIAL PROVISIONS, AND CONTRACT FORM

ITEM NOS.	APPROXIMATE QUANTITIES	DESCRIPTION OF ITEMS AND PRICES BID (IN WRITTEN WORDS)	UNIT PRICE DOLLARS	UNIT PRICE .CTS	AMOUNTS DOLLARS	AMOUNTS .CTS
601	4	CCN 60000 EACH OF ---------- BENCH AT _____ PER EACH	_____	___	_____	___
602	1	CCN 60000 EACH OF ---------- BICYCLE RACK AT _____ PER EACH	_____	___	_____	___
603	1	CCN 60000 EACH OF ---------- DOUBLE SWING GATE AT _____ PER EACH	_____	___	_____	___
604	13	CCN 60000 EACH OF ---------- LITTER RECEPTACLES AT _____ PER EACH	_____	___	_____	___
605	1	CCN 60000 EACH OF ---------- NEWSPAPER CORRAL AT _____ PER EACH	_____	___	_____	___
606	200	CCN 60000 LINEAR FEET OF ---------- STANDARD TYPE A COMB CURB AND GUTTER 12 INCH GUTTE 6 INCH RISE AT _____ PER LIN. FT.	_____	___	_____	___

F.A.P. No.: STP-3057(4)N
S.H.A. No.: BC320-001-815
Baltimore City No.: TR08310

SCHEDULE OF PRICES

NOTE - NOTE - THIS PROPOSAL SHALL BE FILLED IN BY THE BIDDER WITH THE PRICES WRITTEN IN WORDS NUMERAND NUMERALS, AND THE EXTENSIONS SHALL BE MADE BY HIM. FOR COMPLETE INFORMATION THESE I CONCERNING THESE ITEMS SEE SPECIFICATIONS SPECIAL PROVISIONS, AND CONTRACT FORM

ITEM NOS.	APPROXIMATE QUANTITIES	DESCRIPTION OF ITEMS AND PRICES BID (IN WRITTEN WORDS)	UNIT PRICE DOLLARS	UNIT PRICE .CTS	AMOUNTS DOLLARS	AMOUNTS .CTS
607	7,300	CCN 60000 LINEAR FEET OF ---------- MOD. TYPE A COMB CURB AND GUTTER 12 INCH GUTTER 12 INCH DEPTH (6 INCH CURB) AT _____ PER LIN. FT.				
608	2,800	CCN 60000 LINEAR FEET OF ---------- MOD. TYPE A COMB CURB AND GUTTER 12 INCH GUTTER 12 INCH DEPTH (8 INCH CURB) AT _____ PER LIN. FT.				
609	100	CCN 60000 LINEAR FEET OF ---------- CONCRETE CURB 5 INCH DEPTH 6 INCH WIDTH 3 TO 6 INCH RISE AT _____ PER LIN. FT.				
610	50	CCN 60000 LINEAR FEET OF ---------- CONCRETE CURB 10 INCH DEPTH 6 INCH WIDTH 6 INCH RISE AT _____ PER LIN. FT.				
611	200	CCN 60000 LINEAR FEET OF ---------- CONCRETE CURB 11 INCH DEPTH 8 INCH WIDTH 6 TO 15 INCH RISE AT _____ PER LIN. FT.				
612	55,400	CCN 60000 SQUARE FEET OF ---------- 5 INCH THICK CONCRETE SIDEWALK BROOM FINISH AT _____ PER SQ. FT.				

NOTE - NOTE - THIS PROPOSAL SHALL BE FILLED IN BY THE BIDDER WITH THE PRICES WRITTEN IN WORDS AND NUMERALS, AND THE EXTENSIONS SHALL BE MADE BY HIM. FOR COMPLETE INFORMATION CONCERNING THESE ITHESE ITEMS SEE SPECIFICATIONS SPECIAL PROVISIONS, AND CONTRACT FORM

ITEM NOS.	APPROXIMATE QUANTITIES	DESCRIPTION OF ITEMS AND PRICES BID (IN WRITTEN WORDS)	UNIT PRICE DOLLARS	UNIT PRICE .CTS	AMOUNTS DOLLARS	AMOUNTS .CTS
613	330	CCN 60000 SQUARE FEET OF ---------- BELGIAN BLOCK PAVERS AT _____ PER SQ. FT.				
614	20,128	CCN 60000 SQUARE FEET OF ---------- CLAY BRICK UNIT PAVING (ON BITUMINOUS SETTING BED, SAND SWEPT JOINTS) AT _____ PER SQ. FT.				
615	500	CCN 60000 SQUARE FEET OF ---------- DETECTABLE WARNING SURFACE CLAY BRICK PAVER AT _____ PER SQ. FT.				
		END OF CATEGORY NO. 6. NO ALTERNATES.				

F.A.P. No.: STP-3057(4)N
S.H.A. No.: BC320-001-815
Baltimore City No.: TR0831(

F.A.P. No.: STP-3057(4)N

S.H.A. No.: BC320-001-815

Baltimore City No.: TR08310

SCHEDULE OF PRICES

NOTE - THIS PROPOSAL SHALL BE FILLED IN BY THE BIDDER WITH THE PRICES WRITTEN IN WORDS AND NUMERALS, AND THE EXTENSIONS SHALL BE MADE BY HIM. FOR COMPLETE INFORMATION CONCERNING THESE ITEMS SEE SPECIFICATIONS SPECIAL PROVISIONS, AND CONTRACT FORM

ITEM NOS.	APPROXIMATE QUANTITIES	DESCRIPTION OF ITEMS AND PRICES BID (IN WRITTEN WORDS)	UNIT PRICE DOLLARS	UNIT PRICE .CTS	AMOUNTS DOLLARS	AMOUNTS .CTS
701	983	CCN 70000 CUBIC YARDS OF ---------- FURNISHED TOPSOIL AT _____ PER CU. YD.	_____	___	_____	___
702	LUMP SUM	CCN 70000 LUMP SUM OF ---------- TREE, SHRUB, AND PERENNIAL INSTALLATION AND ESTABLISHMENT AT _____ PER LUMP SUM	LUMP	SUM	_____	___
703	208	CCN 70000 THOUSAND GALLONS OF ---------- ADDITIONAL WATERING OF PLANTS AT _____ PER M.G.	_____	___	_____	___
704	2,185	CCN 70000 SQUARE YARDS OF ---------- CONSTRUCTING PLANTING BEDS AT _____ PER SQ. YD.	_____	___	_____	___
705	250	CCN 70000 SQUARE YARDS OF ---------- PLACING FURNISHED TOPSOIL 4 INCH DEPTH AT _____ PER SQ. YD.	_____	___	_____	___
706	250	CCN 70000 SQUARE YARDS OF ---------- TURFGRASS ESTABLISHMENT AT _____ PER SQ. YD.	_____	___	_____	___
707	2,741	CCN 70000 LINEAR FEET OF ---------- ROOT BARRIER FOR TREE PIT PERIMETER AT _____ PER LIN FT.	_____	___	_____	___

F.A.P. No.: STP-3057(4)N

S.H.A. No.: BC320-001-815

Baltimore City No.: TR08310

SCHEDULE OF PRICES

NOTE - NOTE - THIS PROPOSAL SHALL BE FILLED IN BY THE BIDDER WITH THE PRICES WRITTEN IN WORDS AND NUMERALS, WORDS AND THE EXTENSIONS SHALL BE MADE BY HIM. FOR COMPLETE INFORMATION CONCERNING THESE ITEMS SEE INFORM SPECIFICATIONS SPECIAL PROVISIONS, AND CONTRACT FORM CONTRA

ITEM NOS.	APPROXIMATE QUANTITIES	DESCRIPTION OF ITEMS AND PRICES BID (IN WRITTEN WORDS)	UNIT PRICE DOLLARS	UNIT PRICE .CTS	AMOUNTS DOLLARS	AMOUNTS .CTS
708	809	CCN 70000 LINEAR FEET OF ---------- ROOT BARRIER FOR UTILITY WRAPPING AT _____ PER LIN FT.	_____	____	_____	____
		END OF CATEGORY NO. 7 NO ALTERNATES.				

F.A.P. No.: STP-3057(4)N
S.H.A. No.: BC320-001-815
Baltimore City No.: TR0831(

SCHEDULE OF PRICES

NOTE - THIS PROPOSAL SHALL BE FILLED IN BY THE BIDDER WITH THE PRICES WRITTEN IN WORDS AND NUMERALS, AND THE EXTENSIONS SHALL BE MADE BY HIM. FOR COMPLETE INFORMATION CONCERNING THESE ITEMS SEE SPECIFICATIONS SPECIAL PROVISIONS, AND CONTRACT FORM

ITEM NOS.	APPROXIMATE QUANTITIES	DESCRIPTION OF ITEMS AND PRICES BID (IN WRITTEN WORDS)	UNIT PRICE DOLLARS	UNIT PRICE .CTS	AMOUNTS DOLLARS	AMOUNTS .CTS
801	16	CCN 80000 EACH OF ---------- MAST ARM POLE OR JOINT-USE POLE FOUNDATION AT _____ PER EACH	_____	___	_____	___
802	26	CCN 80000 EACH OF ---------- PEDESTAL POLE OR PUSH BUTTON FOUNDATION AT _____ PER EACH	_____	___	_____	___
803	5	CCN 80000 EACH OF ---------- CONTROLLER CABINET FOUNDATION BASE AT _____ PER EACH	_____	___	_____	___
804	35	CCN 80000 EACH OF ---------- LIGHT POLE FOUNDATION AT _____ PER EACH	_____	___	_____	___
805	46	CCN 80000 EACH OF ---------- STEEL SUB-BASE HOMELAND POLE AT _____ PER EACH	_____	___	_____	___
806	23	CCN 80000 EACH OF ---------- EZ-PARK MACHINE BASE AT _____ PER EACH	_____	___	_____	___
807	300	CCN 80000 LINEAR FEET OF ---------- ONE (1) 3 INCH PVC SCHEDULE 40 CONDUIT ENCASED IN CONCRETE - TRENCHED AT _____ PER LIN. FT.				

SCHEDULE OF PRICES

NOTE - NOTE - THIS PROPOSAL SHALL BE FILLED IN BY THE BIDDER WITH THE PRICES WRITTEN IN WORDS AND NUMERALS, AND THE EXTENSIONS SHALL BE MADE BY HIM. FOR COMPLETE INFORMATION CONCERNING THESE ITEMS SEE SPECIFICATIONS SPECIAL PROVISIONS, AND CONTRACT FORM

ITEM NOS.	APPROXIMATE QUANTITIES	DESCRIPTION OF ITEMS AND PRICES BID (IN WRITTEN WORDS)	UNIT PRICE DOLLARS	UNIT PRICE .CTS	AMOUNTS DOLLARS	AMOUNTS .CTS
808	1,975	CCN 80000 LINEAR FEET OF ---------- ONE (1) 4 INCH PVC SCHEDULE 40 CONDUIT ENCASED IN CONCRETE - TRENCHED AT _____ PER LIN. FT.				
809	205	CCN 80000 LINEAR FEET OF ---------- ONE (1) 4 INCH PVC SCHEDULE 40 CONDUIT ENCASED IN CONCRETE - SLOTTED AT _____ PER LIN. FT.				
810	3,800	CCN 80000 LINEAR FEET OF ---------- ONE (1) 3 INCH DB-120 CONCRETE ENCASED CONDUIT - TRENCHED AT _____ PER LIN. FT.				
811	210	CCN 80000 LINEAR FEET OF ---------- TWO (2) 3 INCH DB-120 CONCRETE ENCASED CONDUIT - TRENCHED AT _____ PER LIN. FT.				
812	35	CCN 80000 EACH OF ---------- 400 WATT FIXTURE W/PHOTOCELL, 6 FOOT BRACKET ARM AND LAMP AT _____ PER EACH	_____	___	_____	___
813	11	CCN 80000 EACH OF ---------- 400 WATT FIXTURE W/PHOTOCELL, 10 FOOT BRACKET ARM AND LAMP AT _____ PER EACH	_____	___	_____	___

F.A.P. No.: STP-3057(4)N
S.H.A. No.: BC320-001-815
Baltimore City No.: TR08310

SCHEDULE OF PRICES

NOTE - NOTE - THIS PROPOSAL SHALL BE FILLED IN BY THE BIDDER WITH THE PRICES WRITTEN IN WORDS AND NUMERALS, AND THE EXTENSIONS SHALL BE MADE BY HIM. FOR COMPLETE INFORMATION CONCERNING THESE ITHESE ITEMS SEE SPECIFICATIONS SPECIAL PROVISIONS, AND CONTRACT FORM

ITEM NOS.	APPROXIMATE QUANTITIES	DESCRIPTION OF ITEMS AND PRICES BID (IN WRITTEN WORDS)	UNIT PRICE DOLLARS	UNIT PRICE .CTS	AMOUNTS DOLLARS	AMOUNTS .CTS
814	3	CCN 80000 EACH OF ---------- 250 WATT FIXTURE W/PHOTOCELL, 6 FOOT BRACKET ARM AND LAMP AT _____ PER EACH	_____	___	_____	___
815	46	CCN 80000 EACH OF ---------- DECORATIVE HOMELAND PED. LIGHTING POLE, 150-WATT HPS VICTORIAN FIXTURE, LAMP AND PHOTOCELL AT _____ PER EACH	_____	___	_____	___
816	35	CCN 80000 EACH OF ---------- 30 FOOT ROUND ALUMINUM POLE AT _____ PER EACH	_____	___	_____	___
817	8,100	CCN 80000 LINEAR FEET OF ---------- FOUR (4) CONDUCTOR ELECTRICAL CABLE AWG 14 IMSA 20-1 AT _____ PER LIN. FT.	_____	___	_____	___
818	1,100	CCN 80000 LINEAR FEET OF ---------- SEVEN (7) CONDUCTOR ELECTRICAL CABLE AWG 14 IMSA 20-1 AT _____ PER LIN. FT.	_____	___	_____	___
819	6,000	CCN 80000 LINEAR FEET OF ---------- TWO (2) CONDUCTOR ELECTRICAL CABLE AWG 14 IMSA 20-1 AT _____ PER LIN. FT.	_____	___	_____	___
820	3,300	CCN 80000 LINEAR FEET OF ---------- TWO (2) CONDUCTOR UF/TC ELECTRICAL CABLE AWG 12 AT _____ PER LIN. FT.	_____	___	_____	___

F.A.P. No.: STP-3057(4)N
S.H.A. No.: BC320-001-815
Baltimore City No.: TR0831(

SCHEDULE OF PRICES

NOTE - 'NOTE - THIS PROPOSAL SHALL BE FILLED IN BY THE BIDDER WITH THE PRICES WRITTEN IN WORDS AND NUMERALS, AND THE EXTENSIONS SHALL BE MADE BY HIM. FOR COMPLETE INFORMATION CONCERNING THESE I'THESE ITEMS SEE SPECIFICATIONS SPECIAL PROVISIONS, AND CONTRACT FORM

ITEM NOS.	APPROXIMATE QUANTITIES	DESCRIPTION OF ITEMS AND PRICES BID (IN WRITTEN WORDS)	UNIT PRICE DOLLARS	UNIT PRICE .CTS	AMOUNTS DOLLARS	AMOUNTS .CTS
821	1,950	CCN 80000 LINEAR FEET OF ---------- STRANDED BARE COPPER GROUND WIRE (NO. 6 AWG) AT _____ PER LIN. FT.	_____	___	_____	___
822	116	CCN 80000 EACH OF ---------- GROUND ROD AT _____ PER EACH	_____	___	_____	___
823	1,600	CCN 80000 LINEAR FEET OF ---------- ONE (1) CONDUCTOR #6 AWG XHHW CABLE AT _____ PER LIN. FT.	_____	___	_____	___
824	1,000	CCN 80000 LINEAR FEET OF ---------- 25-PAIR AWG 19 IMSA 20-2 COMMUNICATION CABLE AT _____ PER LIN. FT.	_____	___	_____	___
825	6,080	CCN 80000 LINEAR FEET OF ---------- 12-PAIR AWG 19 IMSA 20-2 COMMUNICATION CABLE AT _____ PER LIN. FT.	_____	___	_____	___
826	2,100	CCN 80000 LINEAR FEET OF ---------- 6-PAIR AWG 19 IMSA 20-2 COMMUNICATION CABLE AT _____ PER LIN. FT.	_____	___	_____	___
827	500	CCN 80000 LINEAR FEET OF ---------- DISCONNECT, PULL BACK, AND RE-ROUTE EXISTING CABLE AT _____ PER LIN. FT.	_____	___	_____	___

F.A.P. No.: STP-3057(4)N
S.H.A. No.: BC320-001-815
Baltimore City No.: TR0831(

SCHEDULE OF PRICES

NOTE - NOTE - THIS PROPOSAL SHALL BE FILLED IN BY THE BIDDER WITH THE PRICES WRITTEN IN WORDS AND NUMERALS, AND THE EXTENSIONS SHALL BE MADE BY HIM. FOR COMPLETE INFORMATION CONCERNING THESE I THESE ITEMS SEE SPECIFICATIONS SPECIAL PROVISIONS, AND CONTRACT FORM

ITEM NOS.	APPROXIMATE QUANTITIES	DESCRIPTION OF ITEMS AND PRICES BID (IN WRITTEN WORDS)	UNIT PRICE DOLLARS	UNIT PRICE .CTS	AMOUNTS DOLLARS	AMOUNTS .CTS
828	20	CCN 80000 EACH OF ---------- TRAFFIC HANDBOX WITH DTT COVER AT _____ PER EACH	_____	___	_____	___
829	87	CCN 80000 EACH OF ---------- LIGHTING HANDBOX WITH DPW COVER AT _____ PER EACH	_____	___	_____	___
830	5	CCN 80000 EACH OF ---------- STANDARD PRECAST COLLECTOR HANDBOX AT _____ PER EACH	_____	___	_____	___
831	1,400	CCN 80000 LINEAR FEET OF ---------- STEEL "U" CHANNEL POST FOR GROUND MOUNTED SIGNS AT _____ PER LIN. FT.	_____	___	_____	___
832	120	CCN 80000 EACH OF ---------- BAND SIGN TO SUPPORT AT _____ PER EACH	_____	___	_____	___
833	930	CCN 80000 SQUARE FEET OF ---------- SHEET ALUMINUM SIGNS AT _____ PER SQ. FT.	_____	___	_____	___
834	496	CCN 80000 SQUARE FEET OF ---------- TRAFFIC SIGNAL SIGNS AT _____ PER SQ. FT.	_____	___	_____	___

F.A.P. No.: STP-3057(4)N
S.H.A. No.: BC320-001-815
Baltimore City No.: TR08310

SCHEDULE OF PRICES

NOTE - 'NOTE - THIS PROPOSAL SHALL BE FILLED IN BY THE BIDDER WITH THE PRICES WRITTEN IN WORDS AND NUMER/NUMERALS, AND THE EXTENSIONS SHALL BE MADE BY HIM. FOR COMPLETE INFORMATION CONCERNING THESE I'THESE ITEMS SEE SPECIFICATIONS SPECIAL PROVISIONS, AND CONTRACT FORM

ITEM NOS.	APPROXIMATE QUANTITIES	DESCRIPTION OF ITEMS AND PRICES BID (IN WRITTEN WORDS)	UNIT PRICE DOLLARS	UNIT PRICE .CTS	AMOUNTS DOLLARS	AMOUNTS .CTS
835	124	CCN 80000 EACH OF ---------- 12 INCH LED TRAFFIC SIGNAL HEAD SECTION AT _____ PER EACH	_____	___	_____	___
836	40	CCN 80000 EACH OF ---------- 16 INCH LED COUNTDOWN PEDESTRIAN SIGNAL HEAD AT _____ PER EACH	_____	___	_____	___
837	5	CCN 80000 EACH OF ---------- TYPE C NAZTEC EIGHT PHASE TRAFFIC SIGNAL CONTROLLER AND CABINET AT _____ PER EACH	_____	___	_____	___
838	40	CCN 80000 EACH OF ---------- AUDIBLE/TACTILE PEDESTRIAN PUSHBUTTON AND SIGNS AT _____ PER EACH	_____	___	_____	___
839	5	CCN 80000 EACH OF ---------- AUDIBLE PEDESTRIAN PUSHBUTTON CABINET BASE UNIT AT _____ PER EACH	_____	___	_____	___
840	5	CCN 80000 EACH OF ---------- BATTERY BACKUP SYSTEM WITH SIDE MOUNT CABINET AT _____ PER EACH	_____	___	_____	___
841	1	CCN 80000 EACH OF ---------- 4-VIDEO DETECTION CAMERA INTERSECTION AT _____ PER EACH	_____	___	_____	___

F.A.P. No.: STP-3057(4)N
S.H.A. No.: BC320-001-815
Baltimore City No.: TR08310

SCHEDULE OF PRICES

NOTE - NOTE - THIS PROPOSAL SHALL BE FILLED IN BY THE BIDDER WITH THE PRICES WRITTEN IN WORDS AND NUMERALS, AND THE EXTENSIONS SHALL BE MADE BY HIM. FOR COMPLETE INFORMATION CONCERNING THESE ITHESE ITEMS SEE SPECIFICATIONS SPECIAL PROVISIONS, AND CONTRACT FORM

ITEM NOS.	APPROXIMATE QUANTITIES	DESCRIPTION OF ITEMS AND PRICES BID (IN WRITTEN WORDS)	UNIT PRICE DOLLARS	UNIT PRICE .CTS	AMOUNTS DOLLARS	AMOUNTS .CTS
842	4	CCN 80000 EACH OF ---------- 2-VIDEO DETECTION CAMERA INTERSECTION AT _____ PER EACH	_____	___	_____	___
843	2,000	CCN 80000 LINEAR FEET OF ---------- VIDEO DETECTION CAMERA CABLE AT _____ PER LIN. FT.	_____	___	_____	___
844	4	CCN 80000 EACH OF ---------- 21 FOOT MAST ARM POLE WITH 44 FOOT ARM AT _____ PER EACH	_____	___	_____	___
845	10	CCN 80000 EACH OF ---------- 28 FOOT JOINT USE MAST ARM POLE WITH 44 FOOT ARM AT _____ PER EACH	_____	___	_____	___
846	1	CCN 80000 EACH OF ---------- 28 FOOT JOINT USE MAST ARM POLE WITH TWIN 44 FT. ARMS AT _____ PER EACH	_____	___	_____	___
847	26	CCN 80000 EACH OF ---------- 10 FOOT PEDESTRIAN POLE AT _____ PER EACH	_____	___	_____	___
848	500	CCN 80000 SQUARE FEET OF ---------- REMOVE EXISTING GROUND MOUNTED SIGNS AND SUPPORTS AT _____ PER SQ. FT.	_____	___	_____	___

F.A.P. No.: STP-3057(4)N
S.H.A. No.: BC320-001-815
Baltimore City No.: TR08310

SCHEDULE OF PRICES

NOTE - 'NOTE - THIS PROPOSAL SHALL BE FILLED IN BY THE BIDDER WITH THE PRICES WRITTEN IN WORDS AND NUMERALS, AND THE EXTENSIONS SHALL BE MADE BY HIM. FOR COMPLETE INFORMATION CONCERNING THESE ITHESE ITEMS SEE SPECIFICATIONS SPECIAL PROVISIONS, AND CONTRACT FORM

ITEM NOS.	APPROXIMATE QUANTITIES	DESCRIPTION OF ITEMS AND PRICES BID (IN WRITTEN WORDS)	UNIT PRICE DOLLARS	UNIT PRICE .CTS	AMOUNTS DOLLARS	AMOUNTS .CTS
849	LUMP SUM	CCN 80000 LUMP SUM OF ---------- REMOVE, SALVAGE, DISPOSE, AND DELIVERY OF TRAFFIC SIGNAL EQUIPMENT AT _____ PER LUMP SUM	LUMP	SUM	_____	___
850	LUMP SUM	CCN 80000 LUMP SUM OF ---------- TEMPORARY STREET LIGHTING AT _____ PER LUMP SUM	LUMP	SUM	_____	___
851	15	CCN 80000 LINEAR FEET OF ---------- TYPE O DUCT SECTION 4-3 IN. I.D. 2W X 2H AT _____ PER LIN. FT.	_____	___	_____	___
852	100	CCN 80000 LINEAR FEET OF ---------- TYPE TA DUCT SECTION (6) 4 IN. AT _____ PER LIN. FT.	_____	___	_____	___
853	15	CCN 80000 LINEAR FEET OF ---------- TYPE TB DUCT SECTION (12) 4 IN. AND (1) 2 IN. AT _____ PER LIN. FT.	_____	___	_____	___
854	65	CCN 80000 LINEAR FEET OF ---------- TYPE TC DUCT SECTION (2) 5 IN. (4) 3 IN. AT _____ PER LIN. FT.	_____	___	_____	___
855	60	CCN 80000 LINEAR FEET OF ---------- TYPE O DUCT SECTION 4-5 IN. I.D. 2W X 2H AT _____ PER LIN. FT.	_____	___	_____	___

F.A.P. No.: STP-3057(4)N
S.H.A. No.: BC320-001-815
Baltimore City No.: TR0831(

SCHEDULE OF PRICES

NOTE - NOTE - THIS PROPOSAL SHALL BE FILLED IN BY THE BIDDER WITH THE PRICES WRITTEN IN WORDS AND NUMER/NUMERALS, AND THE EXTENSIONS SHALL BE MADE BY HIM. FOR COMPLETE INFORMATION CONCERNING THESE ITHESE ITEMS SEE SPECIFICATIONS SPECIAL PROVISIONS, AND CONTRACT FORM

ITEM NOS.	APPROXIMATE QUANTITIES	DESCRIPTION OF ITEMS AND PRICES BID (IN WRITTEN WORDS)	UNIT PRICE DOLLARS	UNIT PRICE .CTS	AMOUNTS DOLLARS	AMOUNTS .CTS
856	875	CCN 80000 LINEAR FEET OF ---------- TYPE TD DUCT SECTION (4) 5 IN. AND (3) 3 IN. AT _____ PER LIN. FT.	_____	___	_____	___
857	4,204	CCN 80000 LINEAR FEET OF ---------- TYPE TE DUCT SECTION (6) 5 IN. AND (3) 3 IN. AT _____ PER LIN. FT.	_____	___	_____	___
858	190	CCN 80000 LINEAR FEET OF ---------- TYPE TF DUCT SECTION (6) 5 IN. (1) 4 IN. AND (5) 3 IN. AT _____ PER LIN. FT.	_____	___	_____	___
859	175	CCN 80000 LINEAR FEET OF ---------- TYPE TH DUCT SECTION (8) 5 IN. (1) 4 IN. AND (5) 3 IN. AT _____ PER LIN. FT.	_____	___	_____	___
860	70	CCN 80000 LINEAR FEET OF ---------- TYPE TI DUCT SECTION (10) 5 IN. AND (3) 3 IN. AT _____ PER LIN. FT.	_____	___	_____	___
861	160	CCN 80000 LINEAR FEET OF ---------- TYPE TJ DUCT SECTION (12) 5 IN. (1) 4 IN. AND (5) 3 IN. AT _____ PER LIN. FT.	_____	___	_____	___
862	40	CCN 80000 LINEAR FEET OF ---------- TYPE TL DUCT SECTION (28) 5 IN. (1) 4 IN. AND (5) 3 IN. AT _____ PER LIN. FT.	_____	___	_____	___

F.A.P. No.: STP-3057(4)N
S.H.A. No.: BC320-001-815
Baltimore City No.: TR0831C

SCHEDULE OF PRICES

NOTE - 'NOTE - THIS PROPOSAL SHALL BE FILLED IN BY THE BIDDER WITH THE PRICES WRITTEN IN WORDS AND NUMERALS, AND THE EXTENSIONS SHALL BE MADE BY HIM. FOR COMPLETE INFORMATION CONCERNING THESE ITHESE ITEMS SEE SPECIFICATIONS SPECIAL PROVISIONS, AND CONTRACT FORM

ITEM NOS.	APPROXIMATE QUANTITIES	DESCRIPTION OF ITEMS AND PRICES BID (IN WRITTEN WORDS)	UNIT PRICE DOLLARS	UNIT PRICE .CTS	AMOUNTS DOLLARS	AMOUNTS .CTS
863	80	CCN 80000 LINEAR FEET OF ---------- REINFORCED CONCRETE TYPE TD DUCT SECTION (4) 5 IN. AND (3) 3 IN. AT _____ PER LIN. FT.	_____	___	_____	___
864	30	CCN 80000 LINEAR FEET OF ---------- REINFORCED CONCRETE TYPE TJ DUCT SECTION (12) 5 IN. (1) 4 IN. AND (5) 3 IN. AT _____ PER LIN. FT.	_____	___	_____	___
865	32	CCN 80000 LINEAR FEET OF ---------- REINFORCED CONCRETE TYPE TL DUCT SECTION (28) 5 IN. (1) 4 IN. AND (5) 3 IN. AT _____ PER LIN. FT.	_____	___	_____	___
866	10	CCN 80000 SQUARE FEET OF ---------- CONDUIT PROTECTIVE SLAB AT _____ PER SQ. FT.	_____	___	_____	___
867	2	CCN 80000 EACH OF ---------- ELECTRICAL DISTRIBUTION MANHOLE 5' X 8' X 7' (CIP) AT _____ PER EACH	_____	___	_____	___
868	12	CCN 80000 EACH OF ---------- ELECTRICAL LINE MANHOLE, 6' X 12' X 7' (CIP) AT _____ PER EACH	_____	___	_____	___
869	8	CCN 80000 EACH OF ---------- ELECTRICAL LINE MANHOLE, 6' X 12' X 9' (CIP) AT _____ PER EACH	_____	___	_____	___

F.A.P. No.: STP-3057(4)N
S.H.A. No.: BC320-001-815
Baltimore City No.: TR08310

SCHEDULE OF PRICES

NOTE - NOTE - THIS PROPOSAL SHALL BE FILLED IN BY THE BIDDER WITH THE PRICES WRITTEN IN WORDS AND NUMERALS, AND THE EXTENSIONS SHALL BE MADE BY HIM. FOR COMPLETE INFORMATION CONCERNING THESE ITEMS SEE SPECIFICATIONS SPECIAL PROVISIONS, AND CONTRACT FORM

ITEM NOS.	APPROXIMATE QUANTITIES	DESCRIPTION OF ITEMS AND PRICES BID (IN WRITTEN WORDS)	UNIT PRICE DOLLARS	UNIT PRICE .CTS	AMOUNTS DOLLARS	AMOUNTS .CTS
870	1	CCN 80000 EACH OF ---------- ELECTRICAL LINE MANHOLE, 7' X 16' X 12' (CIP) AT _____ PER EACH	_____	___	_____	___
871	1	CCN 80000 EACH OF ---------- ELECTRICAL LINE MANHOLE 11.5' X 13' X 9' (CIP) AT _____ PER EACH	_____	___	_____	___
872	1	CCN 80000 EACH OF ---------- MODIFY EXISTING STRUCTURE (5' X 5' X 3' HR.) AT _____ PER EACH	_____	___	_____	___
873	1	CCN 80000 EACH OF ---------- MODIFY EXISTING STRUCTURE (7' X 12.5' X 8.5' HR.) AT _____ PER EACH	_____	___	_____	___
874	1	CCN 80000 EACH OF ---------- MODIFY EXISTING STRUCTURE (6' X 11' X 5.5' HR) AT _____ PER EACH	_____	___	_____	___
875	1	CCN 80000 EACH OF ---------- MODIFY EXISTING STRUCTURE (6' X 12' X 7' HR.) AT _____ PER EACH	_____	___	_____	___
876	1	CCN 80000 EACH OF ---------- MODIFY EXISTING STRUCTURE (6' X 9' X 6' HR.) AT _____ PER EACH	_____	___	_____	___

SCHEDULE OF PRICES

NOTE - 'NOTE - THIS PROPOSAL SHALL BE FILLED IN BY THE BIDDER WITH THE PRICES WRITTEN IN WORDS AND NUMERALS, AND THE EXTENSIONS SHALL BE MADE BY HIM. FOR COMPLETE INFORMATION CONCERNING THESE I'THESE ITEMS SEE SPECIFICATIONS SPECIAL PROVISIONS, AND CONTRACT FORM

ITEM NOS.	APPROXIMATE QUANTITIES	DESCRIPTION OF ITEMS AND PRICES BID (IN WRITTEN WORDS)	UNIT PRICE DOLLARS	UNIT PRICE .CTS	AMOUNTS DOLLARS	AMOUNTS .CTS
877	10	CCN 80000 CUBIC YARDS OF ---------- CONTINGENT ELEC. MANHOLE TOP SLAB RECONSTRUCTION AT _____ PER CU. YD.				
878	100	CCN 80000 LINEAR FEET OF ---------- CONTINGENT WATER SERVICE RELOCATION, LESS THAN TWO INCHES (2") AT _____ PER LIN. FT.				
879	100	CCN 80000 LINEAR FEET OF ---------- CONTINGENT WATER SERVICE RELOCATION, GREATER THAN TWO INCHES (2") AT _____ PER LIN. FT.				
880	100	CCN 80000 LINEAR FEET OF ---------- CONTINGENT SEWER SERVICE RELOCATION AT _____ PER LIN. FT.				
881	48	CCN 80000 LINEAR FEET OF ---------- WATER MAIN 8" DUCTILE IRON PIPE AT _____ PER LIN. FT.				
882	41	CCN 80000 LINEAR FEET OF ---------- WATER MAIN 10" DUCTILE IRON PIPE AT _____ PER LIN. FT.				
883	1	CCN 80000 EACH OF ---------- 22.5 DEG FITTING 10" DUCTILE IRON PIPE AT _____ PER EACH				

SCHEDULE OF PRICES

NOTE - NOTE - THIS PROPOSAL SHALL BE FILLED IN BY THE BIDDER WITH THE PRICES WRITTEN IN WORDS AND NUMER/NUMERALS, AND THE EXTENSIONS SHALL BE MADE BY HIM. FOR COMPLETE INFORMATION CONCERNING THESE I THESE ITEMS SEE SPECIFICATIONS SPECIAL PROVISIONS, AND CONTRACT FORM

ITEM NOS.	APPROXIMATE QUANTITIES	DESCRIPTION OF ITEMS AND PRICES BID (IN WRITTEN WORDS)	UNIT PRICE DOLLARS	UNIT PRICE .CTS	AMOUNTS DOLLARS	AMOUNTS .CTS
884	3	CCN 80000 EACH OF ---------- JOINT-USE STRAIN POLE FOUNDATION AT _____ PER EACH	_____	____	_____	____
885	3	CCN 80000 EACH OF ---------- 28 FOOT JOINT-USE STRAIN POLE AT _____ PER EACH	_____	____	_____	____
886	1	CCN 80000 EACH OF ---------- 21 FOOT MAST ARM POLE WITH TWIN 44 FOOT ARMS AT _____ PER EACH	_____	____	_____	____
		END OF CATEGORY NO. 8 NO ALTERNATES.				

F.A.P. No.: STP-3057(4)N

S.H.A. No.: BC320-001-815

Baltimore City No.: TR08310

SCHEDULE OF PRICES

NOTE - 'NOTE - THIS PROPOSAL SHALL BE FILLED IN BY THE BIDDER WITH THE PRICES WRITTEN IN WORDS AND NUMER/NUMERALS, AND THE EXTENSIONS SHALL BE MADE BY HIM. FOR COMPLETE INFORMATION CONCERNING THESE I'THESE ITEMS SEE SPECIFICATIONS SPECIAL PROVISIONS, AND CONTRACT FORM

ITEM NOS.	APPROXIMATE QUANTITIES	DESCRIPTION OF ITEMS AND PRICES BID (IN WRITTEN WORDS)	UNIT PRICE DOLLARS	UNIT PRICE .CTS	AMOUNTS DOLLARS	AMOUNTS .CTS
	TOTAL BID	(USING THE FOLLOWING ITEMS) 101-137, 201-210, 301-339, 401-417, 501-527, 601-615, 701-708, and 801-886. _____	_____	____	_____	____

The foregoing prices are to include and cover the furnishing of all materials and labor requisite and proper and the providing of all necessary machinery, tools, apparatus and means for performing the work and the doing of all the above-mentioned work as set forth, described and shown in the Plans, Specifications and other Contract Documents.

NOTE: Each and Every Person Bidding and Named above, must sign here. In case of Firms, give the first and last Name of Each Member, in full, with residence.

In case a Bid shall be submitted by or in behalf of any Corporation, it must be signed in the Name of such Corporation, by some Authorized Officer or Agent thereof, who shall also subscribe his Name and Office. If practicable, the Seal of the Corporation shall be affixed.

I hereby acknowledge receipt of the following checked Addendum(s) of the Proposal, Duplicate Proposal and/or Plans.

Addendum Numbers 1___2___3___4___5___6___7___8___9___10___

I understand that Failure to confirm the receipt of Addendum(s) may be cause for rejection of Bids.

WITNESS_____ (SIGNED)_____

(TITLE)_____

(ADDRESS) _____

WITNESS_____ (SIGNED) _____

(TITLE) _____

(ADDRESS) _____

WITNESS _____ (SIGNED) _____

(TITLE) _____

(ADDRESS) _____

A. BIDDER CERTIFICATION OF WORK CAPACITY AND PREQUALIFICATION CLASSIFICATIONS

We hold Certification No. _____ Expires: _____

We have the Work Capacity to perform this Contract as provided in the Standard Specifications and in accordance with the Rules, Regulations and Requirements of the Baltimore City Contractors Qualification Committee.

Our current Certificate of Prequalification includes Work Classifications covering Contract Items to a total of at least fifty percent (50%) of the Aggregate Amount Bid.

_____
BIDDER

By: _____
Signature Title

Subscribe and sworn to before me this _____ day of _____200

_____
(Notary Public)

My Commission Expires _____, 20_____.

GENERAL MATERIAL REQUIREMENTS

CONVICT PRODUCED MATERIALS

Section 1019 of the Intermodal Surface Transportation Efficiency Act of 1991 (ISTEA) clarifies that materials produced by convict labor after July 1, 1991 may not be used for Federal-aid highway construction projects unless produced at a prison facility producing convict made materials for Federal-aid construction projects prior to July 1, 1987.

CONTRACT PROVISION BUY AMERICA

This section only applies to projects partially or totally financed with Federal funds. The Contractor shall comply with Section 165 of the Surface Transportation Assistance Act of 1982 as amended by Section 1041(a) and 1048(a) of the Intermodal Surface Transportation Efficiency Act of 1991 with regard to the furnishing and coating of iron and steel products.

The Contract, if awarded, will be awarded to the responsive and responsible bidder who submits the lowest total bid for the Contract based on furnishing Domestic Products unless such bid exceeds the lowest total bid based on furnishing Foreign Products by more than twenty five percent (25%). Foreign Products will not be permitted to be used as a substitution for Domestic ones after the bid has been awarded.

Furnish steel or iron construction materials, including coating, for permanently incorporated work according to 23 CFR 635.410 and as follows:

(a) All manufacturing processes of steel or iron materials in a product, including coating; and any subsequent process that alters the steel or iron material's physical form or shape, changes its chemical composition, or the final finish; are to occur within the United States (One of the 50 States, the District of Columbia, Puerto Rico, or in territories and possessions of the U.S.). Manufacturing begins with the initial melting and mixing, and continues through the coating stage. The processes include rolling, extruding, machining, bending, grinding, drilling, welding, and coating. The action of applying a coating to steel or iron is deemed a manufacturing process. Coating includes epoxy coating, galvanizing, aluminizing, painting, and any other coating that protects or enhances the value of steel or iron. Any process from the original reduction from ore to the finished product constitutes a manufacturing process for iron.

(b) The following are considered to be steel manufacturing processes:

(1) Production of steel by any of the following processes:

(a) Open hearth furnace.
(b) Basic oxygen.
(c) Electric furnace.
(d) Direct reduction.

(2) Rolling, heat treating, and any other similar processing.

(3) Fabrication of the products:

(a) Spinning wire into cable or strand.
(b) Corrugating and rolling into culverts.
(c) Shop fabrication.

(d) The manufacturing process for a steel/iron product is considered complete when the product is ready for use as an item (e.g., fencing, posts, girders, pipe, manhole cover, etc.) or could be incorporated as a component of a more complex product through a further manufacturing process (e.g., prestressed concrete girders, reinforced concrete pipe, traffic control devices, bearing pads, etc.). A product containing both steel and/or iron components, may be assembled outside the United States and meet Buy America requirements if the constituent steel and iron components (in excess of the minimal amounts permitted) were manufactured domestically and are not modified at the assembly location prior to final assembly.

(e) If domestically produced steel billets or iron ingots are exported outside of the U.S., as defined above, for any manufacturing process then the resulting product does not conform to the Buy America requirements. Additionally, products manufactured domestically from foreign source steel billets or iron ingots do not conform to the Buy America requirements because the initial melting and mixing of alloys to create the material occurred in a foreign country.

(f) Due to a nationwide waiver, Buy America does not apply to raw materials (iron ore and alloys), scrap (recycled steel or iron), and pig iron or processed, pelletized, and reduced iron ore.

(g) For the Buy America provisions to apply, the steel or iron product must be permanently incorporated into the project. If an item is rendered as a "donated material" in accordance with 23 U.S.C. 323 – Donations and Credits, it will have to comply with Buy America requirements. While States and local governments may receive a credit for donated material, this material must generally comply with Buy America requirements. Buy America does not apply to temporary steel items, e.g., temporary sheet piling, temporary

bridges, steel scaffolding and falsework. Further, Buy America does not apply to materials which remain in place at the contractor convenience.

(h) Certifications which document that steel and iron have been manufactured and that coatings for iron or steel have been applied in the United States shall be provided to the Contractor by the manufacturer. The Contractor shall provide the required certifications to the Engineer prior to such items being incorporated into the permanent work. Certifications shall extend to materials utilized in manufactured and fabricated products purchased by the Contractor.

(i) Products manufactured of foreign steel or iron materials may be used, provided the cost of such products as they are delivered to the project does not exceed 0.1% of the total contract amount, or $2,500, whichever is greater. If a supplier or fabricator wishes to use a partial fabrication process where domestic and foreign source components are assembled at a domestic location, the "as delivered cost" of the foreign components should include any transportation, assembly and testing costs required to install them in the final product.

ALTERNATE BID
USING FOREIGN PRODUCTS

When a bidder elects to utilize Foreign Products on one or more items, the following summation indicating the Total Bid using Foreign Products must be completed in addition to the individual item bid tabulations.

The following instructions are given to the bidder in completing the Total Bid summation using Foreign Products:

1 - The "Bid Total" for the initial bid using Domestic Products shall be shown on line (1).

2 - The subtotal for Item Amounts using Domestic Products shall be shown on line (2), for those items which the Contractor elects to use Foreign Products.

3 - The subtotal for Item Amounts using Foreign Products shall be shown on line (3).

4 - The total Bid, utilizing Foreign Products shall be shown on line (4). The value is obtained by subtracting subtotal (2) from the Total Bid (1) and then adding subtotal (3).

Bid Total for Bid 1 using Domestic items	Line (1)_____
Total of Domestic Items	Line (2) -_____
Total of Foreign Items	Line (3) +_____
Bid Total using Foreign Items	Line (4)_____

ALTERNATE BID - USING FOREIGN PRODUCTS
BIDDER'S INSTRUCTIONS

When the bidder elects to submit a bid for one or more items using Foreign Products, the following form must be used. For each item that Foreign Products are contemplated, the appropriate "Item Numbers", "Approximate Quantities", "Description of Items", "Unit Price or Lump Sum Price", "Item Amount Domestic" and "Item Amount Foreign" shall be tabulated below as specified in the initial bid. The bidder shall indicate the unit price in dollars and cents and show the total cost of the item for each item that utilizes Foreign Products. When all items utilizing Foreign Products have been listed, the bidder shall indicate on Page 4 of 20 the subtotals of the Item Amounts for Domestic Products in Line (2) and for Foreign Products in Line (3).

Item Nos.	Approximate Quantities	Description of Items	Unit Price or Lump Sum Dollars.Cts.	Items Amount Domestic Dollars.Cts.	Items Amount Foreign Dollars.Cts.

BID/PROPOSAL AFFIDAVIT

A. AUTHORIZED REPRESENTATIVE AND AFFIANT

I HEREBY AFFIRM THAT:

I am the (title) _____ and the duly authorized representative of (business) _____ and that I possess the legal authority to make this Affidavit on behalf of myself and the business for which I am acting.

B. CERTIFICATION REGARDING COMMERCIAL NONDISCRIMINATION

The undersigned bidder or offeror hereby certifies and agrees that the following information is correct:

In preparing its bid on this project, the bidder or offeror has considered all proposals submitted from qualified, potential subcontractors and suppliers, and has not engaged in "discrimination" as defined in §19-103 of the State Finance and Procurement Article of the Annotated Code of Maryland. "Discrimination" means any disadvantage, difference, distinction, or preference in the solicitation, selection, hiring, or commercial treatment of a vendor, subcontractor, or commercial customer on the basis of race, color, religion, ancestry, or national origin, sex, age, marital status, sexual orientation, or on the basis of disability or any otherwise unlawful use of characteristics regarding the vendors, supplier's or commercial customer's employees or owners. "Discrimination" also includes retaliating against any person or other entity for reporting any incident of "discrimination". Without limiting any other provision of the solicitation on this project, it is understood that, if the certification is false, such false certification constitutes grounds for the State to reject the bid submitted by the bidder or offeror on this project, and terminate any contract awarded based on the bid. As part of its bid or proposal, the bidder or offeror herewith submits a list of all instances within the past 4 years where there has been a final adjudicated determination in a legal or administrative proceeding in the state of Maryland that the bidder or offeror discriminated against subcontractors, vendors, suppliers, or commercial customers, and a description of the status or resolution of that determination, including any remedial action taken. Bidder or Offeror agrees to comply in all respects with the State's Commercial Nondiscrimination Policy as described under Title 19 of the State Finance and Procurement Article of the Annotated Code of Maryland.

C. AFFIRMATION REGARDING BRIBERY CONVICTIONS

I FURTHER AFFIRM THAT:

Neither I, nor to the best of my knowledge, information, and belief, the above business (as is defined in Section 16-101(b) of the State Finance and Procurement Article of the Annotated Code of Maryland), or any of its officers, directors, partners, controlling stockholders, or any of its employees directly involved in the business's contracting activities, including obtaining or performing contracts with public bodies, has been convicted of, or has had probation before judgment imposed pursuant to Criminal Procedure Article, §6-220, Annotated Code of Maryland, or has pleaded nolo contendere to a charge of, bribery, attempted bribery, or conspiracy to bribe in violation of Maryland law, or of the law of any other state or federal law, except as follows (indicate the reasons why the affirmation cannot be given and list any conviction, plea, or imposition of probation before judgment with the date, court, official or administrative body, the sentence or disposition, the name(s) of person(s) involved, and their current positions and responsibilities with the business):

_____

_____

_____.

D. AFFIRMATION REGARDING OTHER CONVICTIONS

I FURTHER AFFIRM THAT:

Neither I, nor to the best of my knowledge, information, and belief, the above business, or any of its officers, directors, partners, controlling stockholders, or any of its employees directly involved in the business's contracting activities including obtaining or performing contracts with public bodies, has:

1. Been convicted under state or federal statute of:
   (a) a criminal offense incident to obtaining, attempting to obtain, or performing a public or private contract; or

   (b) fraud, embezzlement, theft, forgery, falsification or destruction of records, or receiving stolen property;

2. Been convicted of any criminal violation of a state or federal antitrust statute;

3. Been convicted under the provisions of Title 18 of the United States Code for violation of the Racketeer Influenced and Corrupt Organization Act, 18 U.S.C. §1961, et seq., or the Mail

Fraud Act, 18 U.S.C. §1341, et seq., for acts in connection with the submission of bids or proposals for a public or private contract;

4. Been convicted of a violation of the State Minority Business Enterprise Law, Section 14-308 of the State Finance and Procurement Article of the Annotated Code of Maryland;

5. Been convicted of a violation of the Section 11-205.1 of the State Finance and Procurement Article of the Annotated Code of Maryland;

6. Been convicted of conspiracy to commit any act or omission that would constitute grounds for conviction or liability under any law or statute described in subsection (1) through (5) above;

7. Been found civilly liable under a state or federal antitrust statute for acts or omissions in connection with the submission of bids or proposals for a public or private contract;

8. Been found in a final adjudicated decision to have violated the Commercial Nondiscrimination Policy under Title 19 of the State Finance and Procurement Article of the Annotated Code of Maryland with regard to a public or private contract; or

9. Admitted in writing or under oath, during the course of an official investigation or other proceedings, acts or omissions that would constitute grounds for conviction or liability under any law or statute described in Section B – C and subsections (1) through (8) above, except as follows (indicate reasons why the affirmations cannot be given, and list any conviction, plea, or imposition of probation before judgment with the date, court, official or administrative body, the sentence or disposition, the name(s) of the person(s) involved and their current positions and responsibilities with the business, and the status of any debarment):

_____
_____
_____.

E. AFFIRMATION REGARDING DEBARMENT

I FURTHER AFFIRM THAT:

Neither I, nor to the best of my knowledge, information, and belief, the above business, or any of its officers, directors, partners, controlling stockholders, or any of its employees directly involved in the business's contracting activities, including obtaining or performing contracts with public bodies, has ever been suspended or debarred (including being issued a limited denial of participation) by any public entity, except as follows (list each debarment or suspension providing the dates of the suspension or debarment, the name of the public entity and the status

of the proceedings, the name(s) of the person(s) involved and their current positions and responsibilities with the business, the grounds of the debarment or suspension, and the details of each person's involvement in any activity that formed the grounds of the debarment or suspension): _____

F. AFFIRMATION REGARDING DEBARMENT OF RELATED ENTITIES

I FURTHER AFFIRM THAT:

1. The business was not established and it does not operate in a manner designed to evade the application of or defeat the purpose of debarment pursuant to Sections 16-101, et seq., of the State Finance and Procurement Article of the Annotated Code of Maryland; and

2. The business is not a successor, assignee, subsidiary, or affiliate of a suspended or debarred business, except as follows (you must indicate the reasons why the affirmations cannot be given without qualification):

_____
_____
_____.

G. SUB-CONTRACT AFFIRMATION

I FURTHER AFFIRM THAT:

Neither I, nor to the best of my knowledge, information, and belief, the above business, has knowingly entered into a contract with a public body under which a person debarred or suspended under Title 16 of the State Finance and Procurement Article of the Annotated Code of Maryland will provide, directly or indirectly, supplies, services, architectural services, construction related services, leases of real property, or construction.

H. AFFIRMATION REGARDING COLLUSION

I FURTHER AFFIRM THAT:

Neither I, nor to the best of my knowledge, information, and belief, the above business has:

1. Agreed, conspired, connived, or colluded to produce a deceptive show of competition in the compilation of the accompanying bid or offer that is being submitted;

2. In any manner, directly or indirectly, entered into any agreement of any kind to fix the bid price or price proposal of the bidder or Offeror or of any competitor, or otherwise taken any action in restraint of free competitive bidding in connection with the contract for which the accompanying bid or offer is submitted.

I. FINANCIAL DISCLOSURE AFFIRMATION

I FURTHER AFFIRM THAT:

I am aware of, and the above business will comply with, the provisions of Section 13-221 of the State Finance and Procurement Article of the Annotated Code of Maryland, which require that every business that enters into contracts, leases, or other agreements with the State of Maryland or its agencies during a calendar year under which the business is to receive in the aggregate $100,000 or more shall, within 30 days of the time when the aggregate value of the contracts, leases, or other agreements reaches $100,000, file with the Secretary of State of Maryland certain specified information to include disclosure of beneficial ownership of the business.

J. POLITICAL CONTRIBUTION DISCLOSURE AFFIRMATION

I FURTHER AFFIRM THAT:

I am aware of, and the above business will comply with, Election Law Article, §§14-101—14-108, Annotated Code of Maryland, which requires that every person that enters into contracts, leases, or other agreements with the State of Maryland, including its agencies or a political subdivision of the State, during a calendar year in which the person receives in the aggregate $100,000 or more shall file with the State Board of Elections a statement disclosing contributions in excess of $500 made during the reporting period to a candidate for elective office in any primary or general election.

K. DRUG AND ALCOHOL FREE WORKPLACE

(Applicable to all contracts unless the contract is for a law enforcement agency and the agency head or the agency head's designee has determined that application of COMAR 21.11.08 and this certification would be inappropriate in connection with the law enforcement agency's undercover operations.)

I CERTIFY THAT:

1. Terms defined in COMAR 21.11.08 shall have the same meanings when used in this certification.

2. By submission of its bid or offer, the business, if other than an individual, certifies and agrees that, with respect to its employees to be employed under a contract resulting from this solicitation, the business shall:

(a) Maintain a workplace free of drug and alcohol abuse during the term of the contract;

(b)Publish a statement notifying its employees that the unlawful manufacture, distribution, dispensing, possession, or use of drugs, and the abuse of drugs or alcohol is prohibited in the business' workplace and specifying the actions that will be taken against employees for violation of these prohibitions;

(c) Prohibit its employees from working under the influence of drugs or alcohol;

(d) Not hire or assign to work on the contract anyone whom the business knows, or in the exercise of due diligence should know, currently abuses drugs or alcohol and is not actively engaged in a bona fide drug or alcohol abuse assistance or rehabilitation program;

(e) Promptly inform the appropriate law enforcement agency of every drug-related crime that occurs in its workplace if the business has observed the violation or otherwise has reliable information that a violation has occurred;

(f) Establish drug and alcohol abuse awareness programs to inform its employees about:

(i) The dangers of drug and alcohol abuse in the workplace;
(ii) The business' policy of maintaining a drug and alcohol free workplace;
(iii) Any available drug and alcohol counseling, rehabilitation, and employee assistance programs; and
(iv) The penalties that may be imposed upon employees who abuse drugs and alcohol in the workplace;

(g) Provide all employees engaged in the performance of the contract with a copy of the statement required by §K(2)(b), above;

(h) Notify its employees in the statement required by §K(2)(b), above, that as a condition of continued employment on the contract, the employee shall:

(i) Abide by the terms of the statement; and
(ii) Notify the employer of any criminal drug or alcohol abuse conviction for an offense occurring in the workplace not later than 5 days after a conviction;

(i) Notify the procurement officer within 10 days after receiving notice under §K(2)(h)(ii), above, or otherwise receiving actual notice of a conviction;

(j) Within 30 days after receiving notice under §K(2)(h)(ii), above, or otherwise receiving actual notice of a conviction, impose either of the following sanctions or remedial measures on any employee who is convicted of a drug or alcohol abuse offense occurring in the workplace:

(i) Take appropriate personnel action against an employee, up to and including termination; or
(ii) Require an employee to satisfactorily participate in a bona fide drug or alcohol abuse assistance or rehabilitation program; and

(k) Make a good faith effort to maintain a drug and alcohol free workplace through implementation of §K(2)(a)—(j), above.

3. If the business is an individual, the individual shall certify and agree as set forth in §K(4), below, that the individual shall not engage in the unlawful manufacture, distribution, dispensing, possession, or use of drugs or the abuse of drugs or alcohol in the performance of the contract.

4. I acknowledge and agree that:

(a) The award of the contract is conditional upon compliance with COMAR 21.11.08 and this certification;

(b) The violation of the provisions of COMAR 21.11.08 or this certification shall be cause to suspend payments under, or terminate the contract for default under COMAR 21.07.01.11 or 21.07.03.15, as applicable; and

(c) The violation of the provisions of COMAR 21.11.08 or this certification in connection with the contract may, in the exercise of the discretion of the Board of Public Works, result in suspension and debarment of the business under COMAR 21.08.03.

L. CERTIFICATION OF CORPORATION REGISTRATION AND TAX PAYMENT

I FURTHER AFFIRM THAT:

1 The business named above is a (domestic ___) (foreign __) corporation registered in accordance with the Corporations and Associations Article, Annotated Code of Maryland, and that it is in good standing and has filed all of its annual reports, together with filing fees, with the Maryland State Department of Assessments and Taxation, and that the name and address of its resident agent filed with the State Department of Assessments and Taxation is (IF NOT APPLICABLE, SO STATE):

Name: _____
Address: _____
_____
_____

2. Except as validly contested, the business has paid, or has arranged for payment of, all taxes due the State of Maryland and has filed all required returns and reports with the Comptroller of the Treasury, the State Department of Assessments and Taxation, and the Department of Labor, Licensing, and Regulation, as applicable, and will have paid all withholding taxes due the State of Maryland prior to final settlement.

M. CONTINGENT FEES

I FURTHER AFFIRM THAT:

The business has not employed or retained any person, partnership, corporation, or other entity, other than a bona fide employee, bona fide agent, bona fide salesperson, or commercial selling agency working for the business, to solicit or secure the Contract, and that the business has not paid or agreed to pay any person, partnership, corporation, or other entity, other than a bona fide employee, bona fide agent, bona fide salesperson, or commercial selling agency, any fee or any other consideration contingent on the making of the Contract.

N. REPEALED

O. ACKNOWLEDGEMENT

I ACKNOWLEDGE THAT this Affidavit is to be furnished to the Procurement Officer and may be distributed to units of: (1) the State of Maryland; (2) counties or other subdivisions of the State of Maryland; (3) other states; and (4) the federal government. I further acknowledge that this Affidavit is subject to applicable laws of the United States and the State of Maryland, both criminal and civil, and that nothing in this Affidavit or any contract resulting from the submission of this bid or proposal shall be construed to supersede, amend, modify or waive, on behalf of the State of Maryland, or any unit of the State of Maryland having jurisdiction, the exercise of any statutory right or remedy conferred by the Constitution and the laws of Maryland with respect to any misrepresentation made or any violation of the obligations, terms and convenants undertaken by the above business with respect to (1) this Affidavit, (2) the contract, and (3) other Affidavits comprising part of the contract.

I DO SOLEMNLY DECLARE AND AFFIRM UNDER THE PENALTIES OF PERJURY THAT THE CONTENTS OF THIS AFFIDAVIT ARE TRUE AND CORRECT TO THE BEST OF MY KNOWLEDGE, INFORMATION, AND BELIEF.

Date: _____

By: _____
(Authorized Representative and Affiant)

COMPREHENSIVE SIGNATURE PAGE 1 OF 2

THE BIDDER IS HEREBY NOTIFIED THAT THIS DOCUMENT SHALL BE SIGNED IN INK IN ORDER FOR THE BID TO BE ACCEPTED. BY SIGNING, THE BIDDER CERTIFIES THAT HE/SHE WILL COMPLY IN EVERY ASPECT WITH THESE SPECIFICATIONS.

FURTHER, I DO SOLEMNLY DECLARE AND AFFIRM UNDER THE PENALTIES OF PERJURY THAT THE CONTENTS OF THIS AFFIDAVIT (PARAGRAPHS A-N) ARE TRUE AND CORRECT TO THE BEST OF MY KNOWLEDGE, INFORMATION, AND BELIEF.

This bid form shall be filled out legibly in ink or typed. The bid, if submitted by an individual, shall be signed by an individual; if submitted by a partnership, shall be signed by such member or members of the partnership as have authority to bind the partnership; if submitted by a corporation the same shall be signed by the President and attested by the Secretary or an Assistant Secretary. If not signed by the President as aforesaid, there must be attached a copy of that portion of the By-Laws, or a copy of a Board resolution, duly certified by the Secretary, showing the authority of the person so signing on behalf of the corporation. In lieu thereof, the corporation may file such evidence with the Administration, duly certified by the Secretary, together with a list of the names of those officers having authority to execute documents on behalf of the corporation, duly certified by the Secretary, which listing shall remain in full force and effect until such time as the Administration is advised in writing to the contrary. In any case where a bid is signed by an Attorney in Fact the same must be accompanied by a copy of the appointing document, duly certified.

IF AN INDIVIDUAL:

NAME:_____

_____
Street and/or P.O. Box

_____ _____
City State Zip Code Fed ID or SSN

_____(SEAL)_____
Signature Date

_____
Print Signature

WITNESS:_____
Signature

_____
Print Signature

COMPREHENSIVE SIGNATURE PAGE 2 OF 2

IF A PARTNERSHIP:

NAME OF PARTNERSHIP:_____

_____
Street and/or P.O. Box

_____ _____
City State Zip Code Fed ID or SSN

BY:_____(SEAL) _____
Member Signature Date

_____
Print Signature

TITLE:_____ WITNESS:_____
Signature

_____
Print Signature

IF A CORPORATION:

NAME OF CORPORATION:_____

_____
Street and/or P.O. Box

_____ _____
City State Zip Code Fed ID or SSN

STATE OF INCORPORATION:_____

BY:_____(SEAL) _____
Signature Date

_____
Print Signature

TITLE:_____ WITNESS:_____
Secretary's Signature

_____
Print Signature

MDOT DBE FORM A - (MDOT-OP 016-2)
FEDERALLY-FUNDED CONTRACTS (BIDS ONLY)
CERTIFIED DBE UTILIZATION AND FAIR SOLICITATION AFFIDAVIT
Page 1 of 2

THIS AFFIDAVIT MUST BE INCLUDED WITH THE BID. IF THE BIDDER FAILS TO ACCURATELY COMPLETE AND SUBMIT THIS AFFIDAVIT AS REQUIRED, THE BID SHALL BE DEEMED NOT RESPONSIVE.

In connection with the proposal submitted in response to Solicitation No. IFB_ContractNo, I affirm the following:

1. **DBE Participation (PLEASE CHECK ONLY ONE)**

☐ I have met the overall certified Disadvantaged Business Enterprise (DBE) participation goal of **twenty-five** percent (**25%**). I agree that the DBE firms listed in the DBE Participation Schedule - Part 2 of the MDOT DBE Form B (Federally-Funded Contracts – Bids Only) will be used to accomplish the DBE participation goal for this Contract for at least the dollar amounts set forth therein.

OR

☐ I conclude that I am unable to achieve the DBE participation goal. I hereby request a waiver of the overall goal. Within 10 business days of receiving notice that our firm is the apparent awardee or as requested by the Procurement Officer, I will submit a written waiver request and all required documentation in accordance with COMAR 21.11.03.11. I agree that the DBE firms listed in the DBE Participation Schedule - Part 2 of the MDOT DBE Form B (Federally-Funded Contracts – Bids Only) will be used to accomplish the DBE participation goal for this Contract for at least the dollar amounts set forth therein.

2. **Additional DBE Documentation**

I understand that if I am notified that I am the apparent awardee or as requested by the Procurement Officer, I must submit the following documentation within 10 business days of receiving such notice:
(a) Outreach Efforts Compliance Statement (MDOT DBE Form C - Federally-Funded Contracts – Bids Only);
(b) Subcontractor Project Participation Statement (MDOT DBE Form D - Federally-Funded Contracts – Bids Only);
(c) DBE Waiver Request documentation per COMAR 21.11.03.11 (if waiver was requested); and
(d) Any other documentation required by the Procurement Officer to ascertain bidder's responsibility in connection with the certified DBE participation goal.

I acknowledge that if I fail to return each completed document (in 2 (a) through (d)) within the required time, the Procurement Officer may determine that I am not responsible and therefore not eligible for contract award.

MDOT DBE FORM A - (MDOT-OP 016-2)
FEDERALLY-FUNDED CONTRACTS (BIDS ONLY)
CERTIFIED DBE UTILIZATION AND FAIR SOLICITATION AFFIDAVIT
Page 2 of 2

3. Information Provided to DBE firms

In the solicitation of subcontract quotations or offers, DBE firms were provided not less than the same information and amount of time to respond as were non-DBE firms.

I solemnly affirm under the penalties of perjury that the information in this affidavit is true to the best of my knowledge, information and belief.

_____	_____
Company Name	Signature of Representative
_____	_____
Address	Printed Name and Title
_____	_____
City, State and Zip Code	Date

SUBMIT THIS AFFIDAVIT WITH BID/PROPOSAL

MDOT DBE FORM B – (MDOT-OP017-2)
FEDERALLY-FUNDED CONTRACTS (BIDS ONLY)
DBE PARTICIPATION SCHEDULE

PART 1 – INSTRUCTIONS FOR DBE PARTICIPATION SCHEDULE

PARTS 2 AND 3 MUST BE INCLUDED WITH THE BID. IF THE BIDDER FAILS TO ACCURATELY COMPLETE AND SUBMIT PART 2 WITH THE BID AS REQUIRED, THE BID SHALL BE DEEMED NOT RESPONSIVE.

PAGE 1 OF 3

***** STOP *****
FORM INSTRUCTIONS
PLEASE READ BEFORE COMPLETING THIS FORM

1. Please refer to the Maryland Department of Transportation (MDOT) DBE Directory at www.mdot.state.md.us to determine if a firm is certified for the appropriate North American Industry Classification System ("NAICS") Code **and** the product/services description (specific product that a firm is certified to provide or specific areas of work that a firm is certified to perform). For more general information about NAICS, please visit www.naics.com. Only those specific products and/or services for which a firm is certified in the MDOT Directory can be used for purposes of achieving the DBE participation goal.

2. In order to be counted for purposes of achieving the DBE participation goal, the firm must be certified for that specific NAICS ("DBE" for Federally-funded projects designation after NAICS Code). **WARNING:** If the firm's NAICS Code is in **graduated status**, such services/products **will not be counted** for purposes of achieving the DBE participation goal. Graduated status is clearly identified in the MDOT Directory (such graduated codes are designated with the letter "G" after the appropriate NAICS Code).

3. Examining the NAICS Code is the **first step** in determining whether a DBE firm is certified and eligible to receive DBE participation credit for the specific products/services to be supplied or performed under the contract. The **second step** is to determine whether a firm's Products/Services Description in the DBE Directory includes the products to be supplied and/or services to be performed that are used to achieve the DBE participation goal.

4. If you have any questions as to whether a firm is certified to perform the specific services or provide specific products, please call MDOT's Office of Minority Business Enterprise at 1-800-544-6056 or send an email to mbe@mdot.state.md.us.

5. The Contractor's subcontractors are considered second-tier subcontractors. Third-tier contracting used to meet a DBE goal is to be considered the exception and not the rule. The following two conditions must be met before MDOT, its Modal Administrations and the Maryland Transportation Authority may approve a third-tier contracting agreement: (a) the bidder must request in writing approval of each third-tier contract arrangement, and (b) the request must contain specifics as to why a third-tier contracting arrangement should be approved. These documents must be submitted with the bid in Part 2 of this DBE Participation Schedule.

MDOT DBE FORM B – (MDOT-OP017-2)
FEDERALLY-FUNDED CONTRACTS (BIDS ONLY)
DBE PARTICIPATION SCHEDULE

PART 1 – INSTRUCTIONS FOR DBE PARTICIPATION SCHEDULE
PAGE 2 OF 3

6. For each DBE firm that is being used as supplier/wholesaler/regular dealer/broker/manufacturer, please follow these instructions for calculating the **dollar amount of the subcontract for purposes of achieving the DBE participation goal**:

   A. Is the firm certified as a broker of the products/supplies? If the answer is YES, please continue to Item C. If the answer is NO, please continue to Item B.

   B. Is the firm certified as a supplier, wholesaler, regular dealer, or manufacturer of such products/supplies? If the answer is YES, continue to Item D. If the answer is NO, continue to Item C only if the DBE firm is certified to perform trucking/hauling services under NAICS Codes 484110, 484121, 484122, 484210, 484220 and 484230. If the answer is NO and the firm is not certified under these NAICS Codes, then no DBE participation credit will be given for the supply of these products.

   C. For purposes of achieving the DBE participation goal, you may count only the amount of any reasonable fee that the DBE firm will receive for the provision of such products/supplies - not the total subcontract amount or the value (or a percentage thereof) of such products and/or supplies. In Column 4 of the DBE Participation Schedule, please state the amount of any reasonable fee that the DBE firm will receive for the provision of such products/services in Line 4.1.

   D. Is the firm certified as a manufacturer (refer to the firm's NAICS Code and specific description of products/services) of the products/supplies to be provided? If the answer is NO, please continue to Item E. If the answer is YES, for purposes of achieving the DBE participation goal, you may count the total amount of the subcontract. In Column 4 of the DBE Participation Schedule, please state the total amount of the subcontract in Line 4.1.

   E. Is the firm certified as a supplier, wholesaler and/or regular dealer? If the answer is YES (i) if the DBE firm is furnishing and installing the materials and is certified to perform these services, please include in Line 4.1 the total value of the subcontract amount (including full value of supplies); or (ii) if the firm is only being used as a supplier, wholesaler and/or regular dealer or is not certified to install the supplies/materials, for purposes of achieving the DBE participation goal, you may only count sixty percent (60%) of the value of the subcontract for these supplies/products (60% Rule). In Line 4.2 of the DBE Participation Schedule, please state amount of the subcontract for these supplies/products only (not installation) and sixty percent (60%) of such value.

MDOT DBE FORM B – (MDOT-OP017-2)
FEDERALLY-FUNDED CONTRACTS (BIDS ONLY)
DBE PARTICIPATION SCHEDULE

PART 1 – INSTRUCTIONS FOR DBE PARTICIPATION SCHEDULE
PAGE 3 OF 3

7. Please note that for USDOT-funded projects, a DBE prime may count towards its DBE participation goal, work performed by its own forces. Include information about the DBE prime in Part 2.

8. **WARNING:** The percentage of DBE participation, computed using the dollar amounts in Column 4 for all of the DBE firms listed in Part 2, MUST equal at least the DBE participation goal as set forth in MDOT DBE Form A – Federally-Funded Contracts (Bids Only) for this solicitation. If a bidder is unable to achieve the DBE participation goal, then the bidder must request a waiver in Form A or the bid shall be deemed not responsive. You may wish to use the Worksheet shown below to assist you in calculating the percentages and confirming that you have met the applicable DBE participation goal.

WORKSHEET

Total DBE Firm Participation Amount	$_____
(Add amounts listed for all DBE Firms	
in Column 4 of DBE Participation Schedule)	
Divide by Total Contract Amount	÷_____
Percent Overall DBE Participation	=_____

MDOT DBE FORM B – (MDOT-OP017-2)
FEDERALLY-FUNDED CONTRACTS (BIDS ONLY)
DBE PARTICIPATION SCHEDULE

PART 2 – DBE PARTICIPATION SCHEDULE

PART 2 MUST BE INCLUDED WITH THE BID. IF THE BIDDER FAILS TO ACCURATELY COMPLETE AND SUBMIT PART 2 WITH THE BID AS REQUIRED, THE BID SHALL BE DEEMED NOT RESPONSIVE.

PAGE __ OF ___

Prime Contractor	Project Description	Solicitation Number

LIST INFORMATION FOR EACH CERTIFIED MBE SUBCONTRACTOR USED TO ACHIEVE THE DBE PARTICIPATION GOAL.

COLUMN 1	COLUMN 2	COLUMN 3	COLUMN 4 **Unless the bidder requested a waiver in MDOT DBE Form A – Federally Funded Contracts (Bids Only) for this solicitation, the cumulative DBE participation for all DBE firms listed herein must equal at least the DBE participation goal set forth in Form A.**
NAME OF DBE PRIME OR SUBCONTRACTOR AND TIER	**CERTIFICATION NO. AND CLASSIFICATION**	**NAICS CODE/S** **NAICS Code/s of the specific products to be supplied or services to be performed by the DBE firm**	**FOR PURPOSES OF ACHIEVING THE DBE PARTICIPATION GOAL. State the dollar amount of the products/services in Line 4.1 except for those services or products where the DBE firm is being used as a wholesaler, supplier or regular dealer. For those items of work where the DBE firm is being used as a supplier, wholesaler and/or regular dealer complete Line 4.2 using the 60% Rule.**
☐ Please check if DBE firm is a third-tier contractor (if applicable). Please submit written documents in accordance with Section 5 of Part 1 - Instructions	Certification Number: _____ ☐ Women-Owned ☐ African American-Owned ☐ Other DBE Classification		**4.1 TOTAL AMOUNT TO BE PAID TO THE SUBCONTRACTOR** (EXCLUDING PRODUCTS/SERVICES FROM SUPPLIERS, WHOLESALERS, AND REGULAR DEALERS). $ **4.2 TOTAL AMOUNT TO BE PAID TO THE SUBCONTRACTOR FOR ITEMS OF WORK WHERE THE DBE FIRM IS BEING USED AS A SUPPLIER, WHOLESALER AND/OR REGULAR DEALER.** (PLEASE REFER TO SECTION 6(E) IN PART 1 - INSTRUCTIONS). Total value of Supplies/Products $ X 60% (60% Rule) = $ (Amount for purposes of achieving the DBE Participation Goal).

☐Please check if Continuation Sheets are attached.

MDOT DBE FORM B – (MDOT-OP017-2)
FEDERALLY-FUNDED CONTRACTS (BIDS ONLY)
DBE PARTICIPATION SCHEDULE

CONTINUATION SHEET

PAGE __ OF ___

Prime Contractor	Project Description	Solicitation Number

LIST INFORMATION FOR EACH CERTIFIED MBE SUBCONTRACTOR USED TO ACHIEVE THE DBE PARTICIPATION GOAL.

COLUMN 1	COLUMN 2	COLUMN 3	COLUMN 4 **Unless the bidder requested a waiver in MDOT DBE Form A – Federally Funded Contracts (Bids Only) for this solicitation, the cumulative DBE participation for all DBE firms listed herein must equal at least the DBE participation goal set forth in Form A.**
NAME OF DBE PRIME OR SUBCONTRACTOR AND TIER	**CERTIFICATION NO. AND CLASSIFICATION**	**NAICS CODE/S** **NAICS Code/s of the specific products to be supplied or services to be performed by the DBE firm**	**FOR PURPOSES OF ACHIEVING THE DBE PARTICIPATION GOAL. State the dollar amount of the products/services in Line 4.1 except for those services or products where the DBE firm is being used as a wholesaler, supplier or regular dealer. For those items of work where the DBE firm is being used as a supplier, wholesaler and/or regular dealer complete Line 4.2 using the 60% Rule.**
☐ Please check if DBE firm is a third-tier contractor (if applicable). Please submit written documents in accordance with Section 5 of Part 1 - Instructions	Certification Number: _____ ☐ Women-Owned ☐ African American-Owned ☐ Other DBE Classification		**4.1 TOTAL AMOUNT TO BE PAID TO THE SUBCONTRACTOR** (EXCLUDING PRODUCTS/SERVICES FROM SUPPLIERS, WHOLESALERS OR REGULAR DEALERS). $ **4.2 TOTAL AMOUNT TO BE PAID TO THE SUBCONTRACTOR FOR ITEMS OF WORK WHERE THE DBE FIRM IS BEING USED AS A SUPPLIER, WHOLESALER AND/OR REGULAR DEALER.** (PLEASE REFER TO SECTION 6(E) IN PART I - INSTRUCTIONS). Total value of Supplies/Products $ X 60% (60% Rule) = $ (Amount for purposes of achieving the DBE Participation Goal).

☐ Please check if Continuation Sheets are attached.

MDOT DBE FORM B – (MDOT-OP017-2)
FEDERALLY-FUNDED CONTRACTS (BIDS ONLY)
DBE PARTICIPATION SCHEDULE

PART 3 – CERTIFICATION FOR DBE PARTICIPATION SCHEDULE

PARTS 2 AND 3 MUST BE INCLUDED WITH THE BID, AS DIRECTED IN THE SOLICITATION.

I hereby affirm that I have reviewed the Products and Services Description (specific product that a firm is certified to provide or areas of work that a firm is certified to perform) set forth in the MDOT DBE Directory for each of the DBE firms listed in Part 2 of this DBE Form B for purposes of achieving the DBE participation goal that was identified in the DBE Form A that I submitted with this solicitation, and that the DBE firms listed are only performing those products/services/areas of work for which they are certified. I also hereby affirm that I have read and understand the form instructions set forth in Part 1 of this DBE Form B.

I solemnly affirm under the penalties of perjury that the contents of Parts 2 and 3 of MDOT DBE Form B are true to the best of my knowledge, information and belief.

Company Name	Signature of Representative
Address	Printed Name and Title
City, State and Zip Code	Date

INFORMATION REQUIRED TO BE SUBMITTED FOR FEDERALLY ASSISTED CONTRACTS:

(a) Each bidder shall provide the following information:

NAME OF FIRM:_____

_____
Street and/or P.O. Box

_____
City State Zip Code

_____ DBE _____ Non-DBE Age of the firm _____ years
Annual gross receipts per last calendar year _____<$500,000 _____$500,000-1,000,000
_____$1,000,000-3,000,000 _____$3,000,000-5,000,000 _____$5,000,000-10,000,000
_____>$10,000,000

(b) Each bidder shall provide the following information for each firm quoting or considered as subcontractors and/or suppliers:

NAME OF FIRM:_____

_____
Street and/or P.O. Box

_____
City State Zip Code

_____ DBE _____ Non-DBE Age of the firm _____ years
Annual gross receipts per last calendar year _____<$500,000 _____$500,000-1,000,000
_____$1,000,000-3,000,000 _____$3,000,000-5,000,000 _____$5,000,000-10,000,000
_____> $10,000,000

NAME OF FIRM:_____

_____
Street and/or P.O. Box

_____
City State Zip Code

_____ DBE _____ Non-DBE Age of the firm _____ years
Annual gross receipts per last calendar year _____<$500,000 _____$500,000-1,000,000
_____$1,000,000-3,000,000 _____$3,000,000-5,000,000 _____$5,000,000-10,000,000
_____> $10,000,000

NAME OF FIRM:_____

_____
Street and/or P.O. Box

_____
City State Zip Code

____ DBE ____ Non-DBE Age of the firm ____ years
Annual gross receipts per last calendar year _____<$500,000 ____$500,000-1,000,000
____$1,000,000-3,000,000 ____$3,000,000-5,000,000 ____$5,000,000-10,000,000
____> $10,000,000

NAME OF FIRM:_____

_____
Street and/or P.O. Box

_____
City State Zip Code

____ DBE ____ Non-DBE Age of the firm ____ years
Annual gross receipts per last calendar year _____<$500,000 ____$500,000-1,000,000
____$1,000,000-3,000,000 ____$3,000,000-5,000,000 ____$5,000,000-10,000,000
____> $10,000,000

NAME OF FIRM:_____

_____
Street and/or P.O. Box

_____
City State Zip Code

____ DBE ____ Non-DBE Age of the firm ____ years
Annual gross receipts per last calendar year _____<$500,000 ____$500,000-1,000,000
____$1,000,000-3,000,000 ____$3,000,000-5,000,000 ____$5,000,000-10,000,000
____> $10,000,000

Submit additional copies of this page as page 26A of 28, 26B of 28, etc. as necessary, and place them as the last pages in the Invitation for Bids. Place an "X" for "NO" on the last copy. Any additional Copies: _____ NO _____ YES

EXTRA WORK, CONTRACT TIME, BONDING, LIQUIDATED DAMAGES, AND PROPOSAL GUARANTY

EXTRA WORK. It is further proposed to do all "Extra Work" which may be required to complete the work contemplated at unit prices or lump sum prices to be agreed upon in writing prior to starting such extra work, or if such prices or sums cannot be agreed upon, to perform such work on a Force Account basis as specified in TC-7.03.

CONTRACT TIME. To commence work as specified in the "Notice to Proceed" and to prosecute the work to complete the contract within

1,960 (calendar days)

Any delay in awarding or the execution of this contract will not be considered as a basis for any monetary claim, however, an extension of time may be considered by the Administration, if warranted.

BONDING. When the Contractor's bid is $100,000 or more, the Contractor shall furnish a Payment Bond and a Performance Bond in the full amount of the Contract Award as security for the construction and completion of the contract in conformance with the Plans, Standard Specifications, revisions thereto, General Provisions and Special Provisions.

To guarantee all of the work performed under this contract to be done in conformance with the Standard Specifications, revisions thereto, General Provisions and Special Provisions in a good workmanlike manner and to renew or repair any work which may be rejected due to defective materials or workmanship, prior to final completion and acceptance of the work, also we have the equipment, labor, supervision and financial capacity to perform this contract either with our organization or with Subcontractors.

LIQUIDATED DAMAGES. The Contractor is hereby advised that liquidated damages in the amount of

$4,200 dollars per calendar day

will be assessed for unauthorized extensions beyond the contracted time of completion.

PROPOSAL GUARANTY. A bid security is not required on Contract Proposals under $100,000.

A bid security totaling at least five percent (5%) of the bid amount will be required on contracts of $100,000 or over.

Acceptable forms of security for bid guaranty shall be:

(1) A bond in a form satisfactory to the State underwritten by a company licensed to issue bonds in this State;

(2) A bank certified check, bank cashier's check, bank treasurer's check, or cash;

(3) Pledge of security backed by the full faith and full credit of the United States government or bonds issued by the State of Maryland.

Enclosed herewith, find bid security based on at least five percent (5%) of the aggregate amount of the bid submitted, and made payable to the "Director of Finance". This bid security is a Proposal Guarantee (which is understood will be forfeited in the event the contract is not executed, if awarded to the signer of this affidavit).

BID BOND

KNOW ALL MEN BY THESE PRESENTS, that we, the undersigned

_____

as Principal, and _____

as Surety, are hereby held and firmly bound unto the Mayor and City Council of Baltimore as Owner, in the amount of at least five Percent (5%) of the Total Bid submitted for the payment of which, well and truly to be made, we hereby jointly and severally bind ourselves, our heirs, executors, administrators, personal representatives, successors and assigns. Signed this _____ day of _____, 20_____ .

The condition of the above obligation is such that WHEREAS the Principal has submitted to the Board of Estimates of the Mayor and City Council of Baltimore a certain Bid, attached hereto, and hereby made a part hereof to enter into a Contract, in writing, for City of Baltimore, Department of Transportation **F.A.P. NO. STP-3057(4)N, SHA NO. BC320-001-815, BALTIMORE CITY NO. TR 08310, REHABILITATION OF CENTRAL AVENUE AND STORM DRAIN FROM EASTERN AVENUE TO MADISON STREET**

NOW, THEREFORE,

(a) If said Bid shall be rejected or in the alternate.

(b) If said Bid shall be accepted and the Principal shall execute and deliver a Contract in the form of Contract attached here to (properly completed in accordance with said Bid), and shall furnish a bond for his faithful performance of said Contract, and for the payment of all persons performing labor or furnishing materials in connection therewith and shall in all other respects perform the Agreement created by the acceptance of said bid.

Then this obligation shall be void, otherwise the same shall remain in force and effect; it being expressly understood and agreed that the liability of the Surety for any and all claims hereunder shall in no event, exceed the penal amount of this obligation, as herein stated.

The Surety, for value received, hereby stipulates and agrees that the obligations of said Surety and its bond shall be in no way impaired or affected by an extension of the time within which the Owner may accept such Bid; and said Surety does hereby waive notice of any such extension.

IN WITNESS WHEREOF, the Principal and the Surety have hereunto set their Hand and Seals, and such of them as are Corporation have caused their Corporate Seals to be hereto affixed and these presents to be signed by their proper Officers, the day and year first set forth above.

F.A.P. NO. STP-3057(4)N
SHA CONTRACT NO. BC320-001-815
BALTIMORE CITY CONTRACT NO. TR 08310

ATTEST:

_____

PRINCIPAL

_____

_____

_____
(SEAL)

ATTEST:

_____

SURETY

_____
(SEAL)

F.A.P. NO. STP-3057(4)N
SHA CONTRACT NO. BC320-001-815
BALTIMORE CITY CONTRACT NO. TR08310

AGREEMENT

THIS AGREEMENT, made this _____ Day of _____

by and between _____

hereinafter called the "Contractor", and the Mayor and City Council of Baltimore, a Municipal Corporation, hereinafter called the "City".

WHEREAS, the Contract designated as for City of Baltimore, Department of Transportation **F.A.P. NO. STP-3057(4)N, S.H.A. NO. BC320-001-815, BALTIMORE CITY NO. TR08310, REHABILITATION OF CENTRAL AVENUE AND STORM DRAIN FROM EASTERN AVENUE TO MADISON STREET** to be performed in strict accordance with the Contract Documents, which Standard Specifications, Plans and other Contract Documents are in all respects made a part hereof, has recently been awarded to the Contractor by the City, through the Agency of its Board of Estimates, at and for a sum equal to the aggregate cost of the work, labor, materials and supplies done or furnished at the prices and rates respectively named therefore in the Proposal attached hereto; and

WHEREAS, it was one of the conditions of said award that a formal Contract should be executed by and between the Contractor and the City evidencing the terms of said award.

NOW, THEREFORE, THIS AGREEMENT WITNESSETH, That the Contractor doth hereby covenant and agree with the City that it will well and faithfully construct, and complete the said Work in accordance with each and every one of the conditions, covenants, stipulations, terms and provisions contained in the Contract Documents, at and for a sum equal to the aggregate cost of the work, labor, materials and supplies done or furnished at the prices and rates respectively named therefore in the Proposal attached hereto, and will well and faithfully comply with and conform to each and every obligation imposed upon it by the Contract Documents, or by the terms of said award. Time is of the essence of this Agreement.

And the City doth hereby covenant and agree with the Contractor that it will pay the Contractor, when due and payable under the terms of the Contract Documents and of said award, the above mentioned sum; and that it will well and faithfully comply with and perform each and every obligation imposed upon it by the Contract Documents or by the terms of said award.

In WITNESS WHEREOF, Said_____
has caused this Agreement to be signed in its name by its President/Vice President and its Corporate Seal to be hereunto and duly attached and the City has caused these presents to be signed by the Mayor of Baltimore City and the Corporate Seal of the City to be hereunto affixed, duly attested by the Custodian of the City Seal.

F.A.P. NO. STP-3057(4)N
SHA CONTRACT NO. BC320-001-815
BALTIMORE CITY CONTRACT NO. TR08310

ATTEST:

SIGNATURE

SIGNATURE

PRINT NAME AND TITLE (SEAL)

ATTEST:

Mayor and City Council of Baltimore

Custodian of the City Seal

STEPHANIE RAWLINGS-BLAKE,
MAYOR

APPROVAL OF AGREEMENT
FOR
DEPARTMENT OF TRANSPORTATION
CONTRACT NO. **TR 08310**

APPROVED AS TO FORM AND
LEGAL SUFFICIENCY:

APPROVED:

Chief Solicitor

Director, Department of Transportation

APPROVED:

Chief, Department of Transportation
Transportation Engineering and Construction Division

BONDS

PERFORMANCE BOND

Principal	Business Address of Principal
Surety a Corporation of the State of and authorized to do business in the State of Maryland	Obligee Mayor and City Council of Baltimore

Sum of Bond (Equal to Contract Price)

SUM OF _____
_____Dollars

($)

Contract Number and Identification City of Baltimore Department of Transportation Contract No. **TR 08310** **REHABILITATION OF CENTRAL AVENUE AND STORM DRAIN FROM EASTERN AVENUE TO MADISON STREET**	Date of Contract _____, 20___ Date Bond Executed _____, 20___

KNOW ALL MEN BY THESE PRESENTS, That we, the PRINCIPAL above named and SURETY above named, are held and firmly bound unto the OBLIGEE above named in the full and just sum of the amount stated above, for the payment of which sum well and truly to be made, we bind ourselves, our heirs, executors, administrators, personal representatives, successors and assigns, jointly and severally, firmly by these presents.

WHEREAS, the PRINCIPAL is entering into a certain Contract with the OBLIGEE described and dated, as shown above and attached hereto, and is required under the Provisions of the Public General Laws of Maryland to give a bond conditioned as hereinafter set forth.

NOW THEREFORE, if the PRINCIPAL shall well and truly perform and fulfill all the undertakings, covenants, terms, conditions and agreements of said Contract during the original term of said Contract and any extensions thereof that may be granted by the OBLIGEE, with or without notice to the SURETY, and during the term or terms of any maintenance, repair, guaranty and warranty required under the Contract, and

PERFORMANCE BOND (Cont.)

shall also well and truly perform and fulfill all the undertakings, covenants, terms, conditions and agreements of any and all duly authorized modifications of said Contract that may hereafter be made, notice of which modifications to the SURETY being hereby waived, and shall indemnify and save harmless the Mayor and City Council of Baltimore, its agents and employees against and from all costs, expenses, damages, injury or loss to which the said Mayor and City Council of Baltimore, its agents and employees, may be subjected by reason of any wrongdoing, misconduct, want of care or skill, negligence or default on the part of said PRINCIPAL, its agents or employees, or in any manner arising directly or indirectly from any and all causes whatsoever, in or about the execution or performance of the Contract, during the Original term of said Contract and/or any authorized extension or modification thereof and/or during the term or terms of any maintenance, repair, guaranty and warranty required under the Contract, then this obligation shall be null and void; otherwise to remain in full force and effect.

No right of action shall accrue on this bond to or for the use of any person or corporation other than the OBLIGEE, or the successors or assigns of OBLIGEE.

IN WITNESS WHEREOF, the above bounden parties have executed this instrument under their several Seals on the date indicated above, the Name and corporation seal of each corporate party being hereto affixed and these presents duly signed by its undersigned representative, pursuant to authority of its governing body.

ATTEST: as to principal

SIGNATURE	SIGNATURE
PRINT NAME	PRINT NAME AND TITLE (SEAL)

ATTEST: as to surety

SIGNATURE	SIGNATURE
PRINT NAME	PRINT NAME AND TITLE (SEAL)

AGENT (COMPANY): _____

AUTHORIZED BY: _____
NAME AND TITLE

F.A.P. NO. STP-3057(4)N
SHA CONTRACT NO. BC320-001-815
BALTIMORE CITY CONTRACT NO. TR08310

PERFORMANCE BOND (Cont.)

APPROVED:

_____
Mayor of Baltimore City

_____
Comptroller

APPROVED:

_____
Director, Department of Transportation

_____
Chief, Department of Transportation
Transportation Engineering and Construction Division

APPROVED AS TO FORM AND LEGAL SUFFICIENCY:

_____
Chief Solicitor

APPROVED BY BOARD OF ESTIMATES:

_____
Clerk Date

F.A.P. NO. STP-3057(4)N
SHA CONTRACT NO. BC320-001-815
BALTIMORE CITY CONTRACT NO. TR08310

PAYMENT BOND

Principal	Business Address of Principal
Surety a Corporation of the State of and authorized to do business in the State of Maryland	Obligee Mayor and City Council of Baltimore

Sum of Bond (Equal to Contract Price)

SUM OF _____
_____Dollars

($)

Contract Number and Identification City of Baltimore Department of Transportation Contract No. **TR08310** **REHABILITATION OF CENTRAL AVENUE AND STORM DRAIN FROM EASTERN AVUNUE TO MADISON STREET**	Date of Contract _____, 20___ Date Bond Executed _____, 20___

KNOW ALL MEN BY THESE PRESENTS, That we, the PRINCIPAL above named and SURETY above named, are held and firmly bound unto the OBLIGEE above named in the full and just sum of the amount stated above, for the payment of which sum well and truly to be made, we bind ourselves, our heirs, executors, administrators, personal representatives, successors and assigns, jointly and severally, firmly by these presents.

WHEREAS, the PRINCIPAL is entering into a certain Contract with the OBLIGEE described and dated, as shown above and attached hereto, and is required under the Provisions of the Public General Laws of Maryland to give a bond conditioned as hereinafter set forth.

NOW THEREFORE, the condition of this obligation is such that if the PRINCIPAL shall promptly make payments to all persons supplying labor and/or material in the prosecution of the work provided for in said Contract and any and all duly authorized extensions and/or modifications of said contract that may hereafter be made, notice of such extensions and/or modifications to the SURETY being hereby waived, and any maintenance, repair, guaranty and warranty required under the Contract, then this obligation to be null and void; otherwise they remain in full force and effect.

PAYMENT BOND (Cont.)

A suit or action commenced hereunder shall comply with applicable Provisions of the Public General Laws of Maryland. No suit or action shall be commenced hereunder against the OBLIGEE, its successors or assigns, nor shall OBLIGEE be liable for any costs or expenses of such suit.

IN WITNESS WHEREOF, the above bounden parties have executed this instrument under their several Seals on the date indicated above, the Name and corporation seal of each corporate party being hereto affixed and these presents duly signed by its undersigned representative, pursuant to authority of its governing body.

ATTEST: as to principal

SIGNATURE	SIGNATURE
PRINT NAME	PRINT NAME AND TITLE (SEAL)

ATTEST: as to surety

SIGNATURE	SIGNATURE
PRINT NAME	PRINT NAME AND TITLE (SEAL)

AGENT (COMPANY): _____

AUTHORIZED BY: _____
NAME AND TITLE

F.A.P. NO. STP-3057(4)N
SHA CONTRACT NO. BC320-001-815
BALTIMORE CITY CONTRACT NO. TR08310

PAYMENT BOND (Cont.)

APPROVED:

_____
Mayor of Baltimore City

_____
Comptroller

APPROVED:

_____
Director, Department of Transportation

_____
Chief, Transportation Engineering and Construction Division

APPROVED AS TO FORM AND LEGAL SUFFICIENCY:

_____
Chief Solicitor

APPROVED BY BOARD OF ESTIMATES:

_____
Clerk Date